MITSUBISHI ELECTRIC

AC Servo System

MITSUBISHI ELECTRIC SERVO SYSTEM
MELSERVO-J5

MR-J5-A
User's Manual
(Introduction)

-MR-J5-_A_

SAFETY INSTRUCTIONS

Please read the instructions carefully before using the equipment.
To use the equipment correctly, do not attempt to install, operate, maintain, or inspect the equipment until you have read through this manual, installation guide, and appended documents carefully. Do not use the equipment until you have a full knowledge of the equipment, safety information and instructions.
In this manual, the safety instruction levels are classified into "WARNING" and "CAUTION".

⚠ **WARNING**	Indicates that incorrect handling may cause hazardous conditions, resulting in death or severe injury.
⚠ **CAUTION**	Indicates that incorrect handling may cause hazardous conditions, resulting in medium or slight injury.

Note that the CAUTION level may lead to a serious consequence depending on conditions.
Please follow the instructions of both levels because they are important to personnel safety.
Forbidden actions and required actions are indicated by the following diagrammatic symbols.

⃠	Indicates a forbidden action. For example, "No Fire" is indicated by ⃠.
●	Indicates a required action. For example, grounding is indicated by ⏚.

In this manual, precautions for hazards that can lead to property damage, instructions for other functions, and other information are shown separately in the "Point" area.
After reading this manual, keep it accessible to the operator.

[Installation/wiring]

⚠WARNING

- To prevent an electric shock, turn off the power and wait for 15 minutes or more before starting wiring and/or inspection.
- To prevent an electric shock, ground the servo amplifier.
- To prevent an electric shock, any person who is involved in wiring should be fully competent to do the work.
- To prevent an electric shock, mount the servo amplifier before wiring.
- To prevent an electric shock, connect the protective earth (PE) terminal of the servo amplifier to the protective earth (PE) of the cabinet, then connect the grounding lead wire to the ground.
- To prevent an electric shock, do not touch the conductive parts.

[Setting/adjustment]

⚠WARNING

- To prevent an electric shock, do not operate the switches with wet hands.

[Operation]

⚠WARNING

- To prevent an electric shock, do not operate the switches with wet hands.

[Maintenance]

⚠WARNING

- To prevent an electric shock, any person who is involved in inspection should be fully competent to do the work.
- To prevent an electric shock, do not operate the switches with wet hands.

ABOUT THE MANUAL

If you are using the servo for the first time, prepare and refer to the related manuals as necessary to ensure safe operation of the servo.

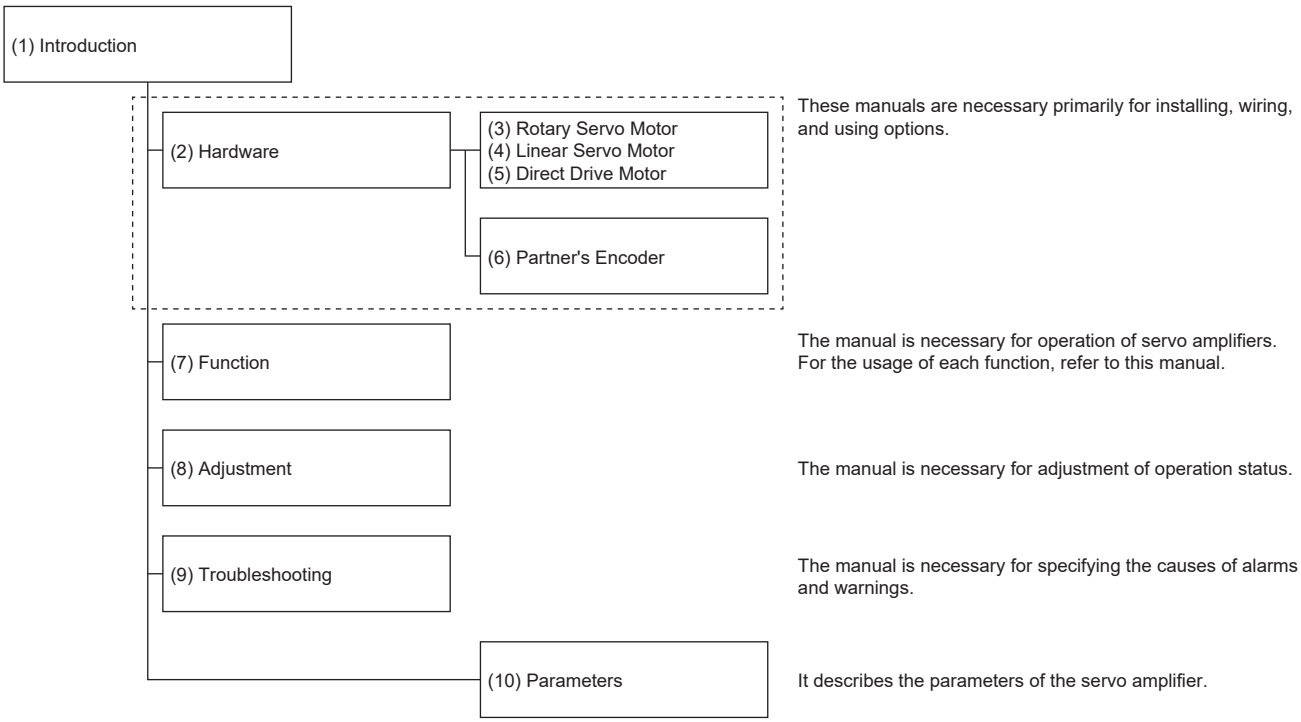

No.	Manual name	Manual No.
(1)	MR-J5-A User's Manual (Introduction)	SH(NA)-030296ENG
(2)	MR-J5 User's Manual (Hardware)	SH(NA)-030298ENG
(3)	Rotary Servo Motor User's Manual (For MR-J5)	SH(NA)-030314ENG
(4)	Linear Servo Motor User's Manual (LM-H4M/LM-H3/LM-U2/LM-F/LM-K2 series)	SH(NA)-030316ENG
	Linear Servo Motor User's Manual (LM-AJ/LM-AU)	IB(NA)-0300518ENG
(5)	Direct Drive Motor User's Manual	SH(NA)-030318ENG
(6)	MR-J5 Partner's Encoder User's Manual	SH(NA)-030320ENG
(7)	MR-J5 User's Manual (Function)	SH(NA)-030300ENG
(8)	MR-J5 User's Manual (Adjustment)	SH(NA)-030306ENG
(9)	MR-J5 User's Manual (Troubleshooting)	SH(NA)-030312ENG
(10)	MR-J5-A User's Manual (Parameters)	SH(NA)-030310ENG

Interpreting servo parameter numbers

For a servo parameter which uses each digit in hexadecimal to select a function, each digit is indicated by the detail number. For example, the detail number of the last digit is represented as [Pr. PA01.0]. In addition, a servo parameter, which uses a combination of several digits to select a function, is represented using "-" as seen in [Pr. PA01.0-1].

The following shows an example in which the servo parameter number is PA01 and the setting value is represented in hexadecimal as "FEDCBA98".

- When setting a servo parameter using each digit

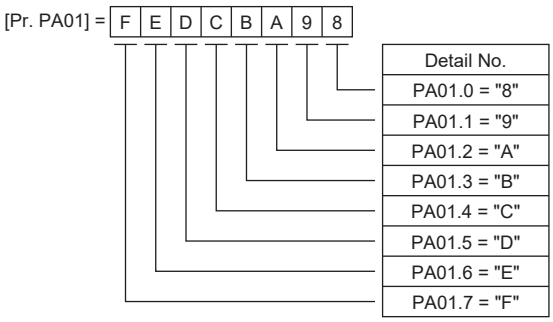

- When setting a servo parameter using a combination of several digits

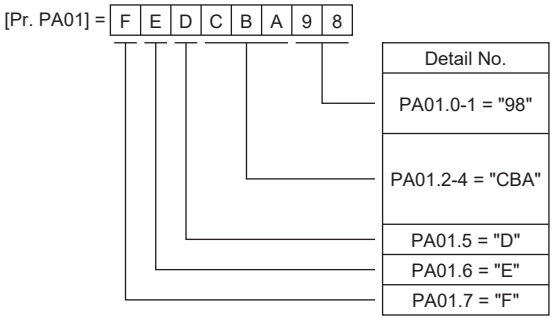

For example, when the servo parameter name is "Function selection A-1", the setting digit name is "Forced stop deceleration function selection", and the servo parameter number is PA04, fourth digit, it is as follows.

[Pr. PA04.3 Forced stop deceleration function selection]

Servo parameter	Symbol	Name	Description
PA04.3	*AOP	Forced stop deceleration function selection	Enable or disable the forced stop deceleration function. Initial value: 1h (enabled)

Global standards and regulations

Compliance with the indicated global standards and regulations is current as of the release date of this manual. Some standards and regulations may have been modified or withdrawn.

DEFINITION OF TERMS IN COMMON BUS CONNECTION

The terms related to the construction of the common bus connection system are defined as follows:

Main unit: The servo amplifier connected to the 3-phase AC input power supply. It is the axis with the largest capacity in the servo system.

Sub unit: The servo amplifier not connected to the 3-phase AC input power supply. It is the axis powered by the bus of the main unit.

U.S. CUSTOMARY UNITS

U.S. customary units are not shown in this manual. Convert the values if necessary according to the following table.

Quantity	SI (metric) unit	U.S. customary unit
Mass	1 [kg]	2.2046 [lb]
Length	1 [mm]	0.03937 [inch]
Torque	1 [N•m]	141.6 [oz•inch]
Moment of inertia	1 [(× 10^{-4} kg•m^2)]	5.4675 [oz•$inch^2$]
Load (thrust load/axial load)	1 [N]	0.2248 [lbf]
Temperature	N [°C] × 9/5 + 32	N [°F]

CONTENTS

SAFETY INSTRUCTIONS. 1
ABOUT THE MANUAL 3
DEFINITION OF TERMS IN COMMON BUS CONNECTION. 4
U.S. CUSTOMARY UNITS 5

CHAPTER 1 SPECIFICATIONS 8

1.1 Outline 8
1.2 Model designation 8
1.3 Servo amplifier/motor combinations 10
1.4 Servo amplifier standard specifications 11
MR-J5-_A_ 11
Functional safety 14
Environment 15
1.5 Function block diagram 16
1.6 Configuration including peripheral equipment 20
1.7 Special specifications 21
Servo amplifiers without dynamic brake (-ED/-RU) 21
Servo amplifiers without regenerative resister (-PX/-RZ) 21
Special coating specification products (-EB/-RB) 22

CHAPTER 2 FUNCTION 23

2.1 Function list 23
2.2 Security 32

CHAPTER 3 STRUCTURE 33

3.1 Parts identification 33
3.2 Switch setting and display of the servo amplifier 35
Display sequence 35
Status display 37
Diagnostic mode 44
Alarm mode 46
Parameter mode 47
External I/O signal display 49
Output signal (DO) forced output. 50
Test operation mode 50

CHAPTER 4 STARTUP 53

4.1 Turning on servo amplifier for the first time 57
Test operation of the servo motor alone in test operation mode 58
Equipment configuration setting 59
Controller-related setting 59
Operation by controller command 60
4.2 Instructions on startup 64
4.3 Troubleshooting at startup 64
4.4 Duplicate setting 67
Duplication using MR Configurator2 67
4.5 Test operation 67
Execution method 67

Motor driving by test operation 68
Motor-less operation 71
Output signal (DO) forced output. 72
4.6 Servo amplifier setting initialization 73
Initialization procedure by MR Mode Change 73

CHAPTER 5 MAINTENANCE, INSPECTION AND PARTS REPLACEMENT 74

5.1 Inspection items 74
Periodic inspection 74
5.2 Parts with a service life. 75

CHAPTER 6 COMPLIANCE WITH GLOBAL LAWS AND REGULATIONS 76

6.1 Compliance with global standards 76
6.2 Handling of AC servo amplifier batteries for the United Nations Recommendations on the Transport of Dangerous Goods 76
Target model 76
Purpose 76
Handling during transportation 77
Package at our shipment. 78
Transportation precaution for customers. 78
6.3 Symbol for EU 79
EU Battery Regulation. 79
6.4 Compliance with China Compulsory Certification (CCC) 80
6.5 Compliance with the China RoHS directive 81
REVISIONS. 82
WARRANTY 83
TRADEMARKS 84

1 SPECIFICATIONS

1.1 Outline

MR-J5-_A_ is a servo amplifier that is used with pulse train commands/analog voltage commands.

1.2 Model designation

Rating plate

The following shows an example of the rating plate for explanation of each item.

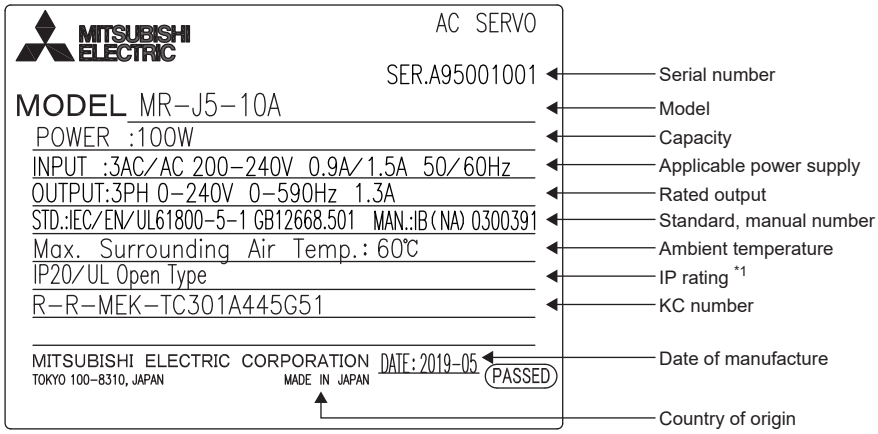

*1 The IP rating of the standard certification. For the actual IP rating, refer to the following.
☞ Page 11 Servo amplifier standard specifications

Model

The following describes what each block of a model name indicates. Not all combinations of the symbols are available.

MR - J 5 - 6 0 A 4 - R J

Series

Rated output

Symbol	Rated output [kW]
10	0.1
20	0.2
40	0.4
60	0.6
70	0.75
100	1
200	2
350	3.5
500	5
700	7
12K	12
17K	17
25K	25

General-purpose interface

Power supply *1

Symbol	Power supply
None	3-phase or 1-phase 200 V AC to 240 V AC
4	3-phase 380 V AC to 480 V AC

Special specification

Symbol	Special specification
None	Standard
-RJ	Compatible with load-side encoder A/B/Z-phase input/high-resolution analog input
-ED	Standard model without dynamic brake
-RU	MR-J5-_A_-RJ without dynamic brake
-PX	Standard model without regenerative resistor
-RZ	MR-J5-_A_-RJ without regenerative resistor
-EB	Standard products with a special coating specification
-RB	MR-J5-_A_-RJ with a special coating specification

*1 When using a servo amplifier with a 1-phase 100 V AC to 120 V AC power supply input, connect an MR-CM08K1 simple converter and a 200 V class 1-axis servo amplifier. The MR-CM08K1 simple converter is available on servo amplifiers with firmware version F0 or later. For details, refer to "MR-CM08K1 simple converter" in the following manual.
MR-J5 User's Manual (Hardware)

Item		Special specifications *1							
		Not attached	-RJ	-ED	-RU	-PX *2	-RZ *2	-EB *3	-RB *3
CN2L connector		×	○	×	○	×	○	×	○
Linear servo system	Two-wire type	○	○	○	○	○	○	○	○
	Four-wire type	○	○	○	○	○	○	○	○
	A/B/Z-phase differential input	×	○	×	○	×	○	×	○
Fully closed loop system Scale measurement function	Two-wire type	○	○	○	○	○	○	○	○
	Four-wire type	×	○	×	○	×	○	×	○
	A/B/Z-phase differential input	×	○	×	○	×	○	×	○
Analog input	14 bits or its equivalent	○	○	○	○	○	○	○	○
	16 bits or its equivalent	×	○	×	○	×	○	×	○
Built-in dynamic brake	7 kW or less	○	○	×	×	—	—	○	○
	12 kW or more	×	×	×	×	×	×	×	×
Built-in regenerative resistor		○	○	○	○	×	×	○	○
Special coating		×	×	×	×	×	×	○	○

*1 ○: The corresponding item is included or supported. ×: The corresponding item is not included or not supported.
*2 For details of this special specification, refer to the following.
☞ Page 21 Servo amplifiers without regenerative resister (-PX/-RZ)
*3 For details of this special specification, refer to the following.
☞ Page 22 Special coating specification products (-EB/-RB)

■Correspondence table of servo amplifiers and special specifications

Servo amplifier	Special specifications *1							
	None	-RJ	-ED	-RU	-PX	-RZ	-EB	-RB
MR-J5-10A_	○	○	○	○	×	×	○	○
MR-J5-20A_	○	○	○	○	×	×	○	○
MR-J5-40A_	○	○	○	○	×	×	○	○
MR-J5-60A_	○	○	○	○	×	×	○	○
MR-J5-70A_	○	○	○	○	×	×	○	○
MR-J5-100A_	○	○	○	○	×	×	○	○
MR-J5-200A_	○	○	○	○	×	×	○	○
MR-J5-350A_	○	○	○	○	×	×	○	○
MR-J5-500A_	○	○	○	○	×	×	○	○
MR-J5-700A_	○	○	○	○	×	×	○	○
MR-J5-12KA_	○	○	×	×	○	○	×	×
MR-J5-17KA_	○	○	×	×	○	○	×	×
MR-J5-25KA_	○	○	×	×	○	○	×	×
MR-J5-60A4_	○	○	○	○	×	×	○	○
MR-J5-100A4_	○	○	○	○	×	×	○	○
MR-J5-200A4_	○	○	○	○	×	×	○	○
MR-J5-350A4_	○	○	○	○	×	×	○	○
MR-J5-500A4_	○	○	○	○	×	×	○	○
MR-J5-700A4_	○	○	○	○	×	×	○	○
MR-J5-12KA4_	○	○	×	×	○	○	×	×
MR-J5-17KA4_	○	○	×	×	○	○	×	×
MR-J5-25KA4_	○	○	×	×	○	○	×	×

*1 ○: Supported
×: Not supported

1.3 Servo amplifier/motor combinations

Refer to "Servo amplifier/motor combinations" in the following manual.

📖MR-J5 User's Manual (Hardware)

1.4 Servo amplifier standard specifications

Point

When using a servo amplifier with a 1-phase 100 V AC to 120 V AC power supply input, connect an MR-CM08K1 simple converter and a 200 V class 1-axis servo amplifier. The MR-CM08K1 simple converter is available on servo amplifiers with firmware version F0 or later. For details, refer to "MR-CM08K1 simple converter" in the following manual.
MR-J5 User's Manual (Hardware)

MR-J5-_A_

200 V class

Model: MR-J5-			10A	20A	40A	60A	70A	100A	200A	350A	500A	700A	12KA	17KA	25KA
Output	Voltage		3-phase 0 V AC to 240 V AC												
	Rated current [A]		1.3	1.8	2.8	3.2	5.8	6.0	11.0	17.0	28.0	37.0	68.0	87.0	126.0
Main circuit power supply input	Voltage/ Frequency	At AC input	3-phase or 1-phase 200 V AC to 240 V AC, 50 Hz/60 Hz					3-phase or 1-phase 200 V AC to 240 V AC, 50 Hz/60 Hz *4		3-phase 200 V AC to 240 V AC, 50 Hz/60 Hz					
		At DC input	283 V DC to 340 V DC												
	Rated current [A] *3	At AC input	0.9 (1.5)	1.5 (2.5)	2.6 (4.5)	3.2 (5.0)	3.8 (6.5)	5.0 (10.5)	10.5 (15.8)	16.0	21.7	28.9	52.0	72.2	109.7
		At DC input	1.1	1.8	3.2	3.5	4.6	6.0	12.4	19.4	26.5	38.9	63.6	77.7	132.9
	Permissible voltage fluctuation	At AC input	3-phase or 1-phase 170 V AC to 264 V AC					3-phase or 1-phase 170 V AC to 264 V AC *4		3-phase 170 V AC to 264 V AC					
		At DC input	241 V DC to 374 V DC												
	Permissible frequency fluctuation		Within ±5 %												
	Power supply capacity [kVA]		Refer to "Power supply capacity and generated loss" in the following manual. MR-J5 User's Manual (Hardware)												
	Inrush current [A]		Refer to "Inrush currents at power-on of main circuit and control circuit" in the following manual. MR-J5 User's Manual (Hardware)												
Control circuit power supply input	Voltage/ Frequency	At AC input	1-phase 200 V AC to 240 V AC, 50 Hz/60 Hz												
		At DC input	283 V DC to 340 V DC												
	Rated current [A]		0.2								0.3				
	Permissible voltage fluctuation	At AC input	1-phase 170 V AC to 264 V AC												
		At DC input	241 V DC to 374 V DC												
	Permissible frequency fluctuation		Within ±5 %												
	Power consumption [W]		30										45		
	Inrush current [A]		Refer to "Inrush currents at power-on of main circuit and control circuit" in the following manual. MR-J5 User's Manual (Hardware)												
Interface power supply	Voltage		24 V DC ±10 %												
	Current capacity [A]		0.5 (including CN8 connector signals) *1												
Control method			Sine-wave PWM control, current control method												
Dynamic brake			Built-in										External *7*8		
Communication function	USB		Connection to a personal computer or other devices (MR Configurator2-compatible)												
	RS-422/RS-485		1: n communication (up to 32 axes)												
A/B/Z-phase pulse output			Supported												
Analog monitor			Two channels												

Model: MR-J5-		10A	20A	40A	60A	70A	100A	200A	350A	500A	700A	12KA	17KA	25KA
Position control mode	Max. pulse frequency	4 Mpulses/s (for differential receiver) *5, 200 kpulses/s (for open collector)												
	Positioning feedback pulse	Encoder resolution (resolution per servo motor revolution): 26 bits												
	Command pulse multiplying factor	Electronic gear A/B multiple, A:1 to 2147483647, B:1 to 2147483647, 1/10 < A/B < 64000												
	In-position range setting	0 pulses to ±16777215 pulses (command pulse unit)												
	Excessive error	±3 revolutions												
	Torque limit	Set with servo parameter or external analog input (0 V DC to +10 V DC/maximum torque)												
Speed control mode	Speed control range	Analog speed command 1: 2000, internal speed command 1: 5000												
	Analog speed command input	0 V DC to ±10 V DC/rated speed (The speed at 10 V is changeable with [Pr. PC12].)												
	Speed fluctuation ratio	±0.01 % or less (load fluctuation: 0 % to 100 %), 0 % (power fluctuation: ±10 %) ±0.2 % or less (ambient temperature: 25 °C ±10 °C) when using analog speed commands												
	Torque limit	Set with servo parameter or external analog input (0 V DC to +10 V DC/maximum torque)												
Torque control mode	Analog torque command input	0 V DC to ±8 V DC/maximum torque (input impedance: 10 kΩ to 12 kΩ)												
	Speed limit	Set with servo parameter setting or external analog input (0 V DC to ±10 V DC/rated speed)												
Fully closed loop control		Supported												
Load-side encoder interface	MR-J5-_A	Mitsubishi Electric high-speed serial communication												
	MR-J5-_A-RJ	Mitsubishi Electric high-speed serial communication/A/B/Z-phase differential input signal												
Protective function		Overcurrent shut-off, regenerative overvoltage shut-off, overload shut-off (electronic thermal), servo motor overheat protection, encoder error protection, regenerative error protection, undervoltage protection, instantaneous power failure protection, overspeed protection, excessive error protection, magnetic pole detection protection, and linear servo control error protection												
Global standards	CE marking	LVD: EN 61800-5-1, EMC: EN 61800-3, MD: EN ISO 13849-1:2015, EN 61800-5-2, EN IEC 62061												
	UKCA marking	LVD: BS EN 61800-5-1, EMC: BS EN IEC 61800-3, MD: BS EN ISO 13849-1:2015, BS EN 61800-5-2, BS EN IEC 62061												
	UL standard	UL 61800-5-1												
Structure (IP rating)		Natural cooling, open (IP20)				Force cooling, open (IP20)				Force cooling, open (IP20) *6		Force cooling, open (IP20) *9*10		
Close mounting *2	3-phase power supply input	Possible										Impossible		
	1-phase power supply input	Possible					Impossible		—					
Mass [kg]		0.8			1.0	1.4		2.2		3.7	6.2	12.7		18.1

*1 This value is applicable when all I/O signals are used. Reducing the number of I/O points decreases the current capacity.
*2 If closely mounting the servo amplifiers, operate them at an ambient temperature of 0 ˚C to 45 ˚C or at 75 % or less of the effective load ratio.
*3 The value in ( ) is the rated current for the 1-phase power supply input.
*4 If using 1-phase power supply in combination with the servo motor of 750 W or higher, operate the servo amplifier at 75 % or less of the effective load ratio.
*5 When the servo amplifier is set to the initial setting, commands up to 1 Mpulse/s can be input. When inputting commands exceeding 1 Mpulse/s and up to 4 Mpulses/s, change the setting in [Pr. PA13].
*6 This does not apply to connectors.
*7 Use an external dynamic brake for this servo amplifier. Otherwise, the servo amplifier coasts without a quick stop and may cause an accident. Ensure the safety in the entire system.
*8 To make the servo amplifier comply with the SEMI-F47 standard, the external dynamic brake cannot be used. Do not assign DB (dynamic brake interlock) to [Pr. PD23] to [Pr. PD28]. If DB (dynamic brake interlock) is assigned, the servo amplifier turns to the servo-off state when an instantaneous power failure occurs.
*9 The terminal block is excluded.
*10 The IP rating of the standard certification is IP00.

400 V class

Model: MR-J5-			60A4	100A4	200A4	350A4	500A4	700A4	12KA4	17KA4	25KA4
Output	Voltage		3-phase 0 V AC to 480 V AC								
	Rated current [A]		1.6	2.8	5.5	8.6	14	17	32.0	41.0	63.0
Main circuit power supply input	Voltage/ Frequency	At AC input	3-phase 380 V AC to 480 V AC, 50 Hz/60 Hz								
	Rated current [A]		1.4	2.5	5.1	7.9	10.8	14.4	26.0	36.1	54.8
	Permissible voltage fluctuation	At AC input	3-phase 323 V AC to 528 V AC								
	Permissible frequency fluctuation		Within ±5 %								
	Power supply capacity [kVA]		Refer to "Power supply capacity and generated loss" in the following manual. MR-J5 User's Manual (Hardware)								
	Inrush current [A]		Refer to "Inrush currents at power-on of main circuit and control circuit" in the following manual. MR-J5 User's Manual (Hardware)								
Control circuit power supply input	Voltage/ Frequency	At AC input	1-phase 380 V AC to 480 V AC, 50 Hz/60 Hz								
	Rated current [A]		0.1				0.2				
	Permissible voltage fluctuation	At AC input	1-phase 323 V AC to 528 V AC								
	Permissible frequency fluctuation		Within ±5 %								
	Power consumption [W]		30				45				
	Inrush current [A]		Refer to "Inrush currents at power-on of main circuit and control circuit" in the following manual. MR-J5 User's Manual (Hardware)								
Interface power supply	Voltage		24 V DC ±10 %								
	Current capacity [A]		0.5 (including CN8 connector signals) *1								
Control method			Sine-wave PWM control, current control method								
Dynamic brake			Built-in						External *3*4		
Communication function	USB		Connection to a personal computer or other devices (MR Configurator2-compatible)								
	RS-422/RS-485		1: n communication (up to 32 axes)								
A/B/Z-phase pulse output			Supported								
Analog monitor			Two channels								
Position control mode	Max. pulse frequency		4 Mpulses/s (for differential receiver) *2, 200 kpulses/s (for open collector)								
	Positioning feedback pulse		Encoder resolution (resolution per servo motor revolution): 26 bits								
	Command pulse multiplying factor		Electronic gear A/B multiple, A:1 to 2147483647, B:1 to 2147483647, 1/10 < A/B < 64000								
	In-position range setting		0 pulses to ±16777215 pulses (command pulse unit)								
	Excessive error		±3 revolutions								
	Torque limit		Set with servo parameter or external analog input (0 V DC to +10 V DC/maximum torque)								
Speed control mode	Speed control range		Analog speed command 1: 2000, Internal speed command 1: 5000								
	Analog speed command input		0 V DC to ±10 V DC/rated speed (The speed at 10 V is changeable with [Pr. PC12].)								
	Speed fluctuation ratio		±0.01 % or less (load fluctuation: 0 % to 100 %), 0 % (power fluctuation: ±10 %) ±0.2 % or less (ambient temperature: 25 °C ±10 °C) when using analog speed commands								
	Torque limit		Set with servo parameter or external analog input (0 V DC to +10 V DC/maximum torque)								
Torque control mode	Analog torque command input		0 V DC to ±8 V DC/maximum torque (input impedance: 10 kΩ to 12 kΩ)								
	Speed limit		Set with servo parameter setting or external analog input (0 V DC to ±10 V DC/rated speed)								
Fully closed loop control			Supported								
Load-side encoder interface	MR-J5-_A4		Mitsubishi Electric high-speed serial communication								
	MR-J5-_A4-RJ		Mitsubishi Electric high-speed serial communication/A/B/Z-phase differential input signal								
Protective function			Overcurrent shut-off, regenerative overvoltage shut-off, overload shut-off (electronic thermal), servo motor overheat protection, encoder error protection, regenerative error protection, undervoltage protection, instantaneous power failure protection, overspeed protection, excessive error protection, magnetic pole detection protection, and linear servo control error protection								

Model: MR-J5-		60A4	100A4	200A4	350A4	500A4	700A4	12KA4	17KA4	25KA4
Global standards	CE marking	LVD: EN 61800-5-1, EMC: EN 61800-3, MD: EN ISO 13849-1:2015, EN 61800-5-2, EN IEC 62061								
	UKCA marking	LVD: BS EN 61800-5-1, EMC: BS EN IEC 61800-3, MD: BS EN ISO 13849-1:2015, BS EN 61800-5-2, BS EN IEC 62061								
	UL standard	UL 61800-5-1								
Structure (IP rating)		Natural cooling, open (IP20)		Force cooling, open (IP20)				Force cooling, open (IP20) *5*6		
Close mounting		Impossible								
Mass [kg]		1.6		2.2	2.3	5.2	5.4	12.7		18.1

*1 This value is applicable when all I/O signals are used. Reducing the number of I/O points decreases the current capacity.
*2 When the servo amplifier is set to the initial setting, commands up to 1 Mpulse/s can be input. When inputting commands exceeding 1 Mpulse/s and up to 4 Mpulses/s, change the setting in [Pr. PA13].
*3 Use an external dynamic brake for this servo amplifier. Otherwise, the servo amplifier coasts without a quick stop and may cause an accident. Ensure the safety in the entire system.
*4 To make the servo amplifier comply with the SEMI-F47 standard, the external dynamic brake cannot be used. Do not assign DB (dynamic brake interlock) to [Pr. PD23] to [Pr. PD28]. If DB (dynamic brake interlock) is assigned, the servo amplifier turns to the servo-off state when an instantaneous power failure occurs.
*5 The IP rating of the standard certification is IP00.
*6 The terminal block is excluded.

Functional safety

Item		Specifications
Safety sub-function		STO (IEC/EN 61800-5-2)
Safety performance	Standard	EN ISO 13849-1:2015 Category 3 PL e, IEC 61508 SIL 3, EN IEC 62061 maximum SIL 3, EN 61800-5-2
	Response performance	8 ms or less (STO input off → energy shut off)
	Test pulse input (STO) *1	Test pulse interval: 250ms to 1000ms, test pulse off time: Up to 1 ms
	Mean time to dangerous failure (MTTFd)	MTTFd ≥ 100 [years] (314a)
	Diagnostic coverage (DC)	DC = Medium, 97.6 [%]
	Probability of dangerous Failure per Hour (PFH)	PFH = 6.4×10^{-9} [1/h]
	Mission time (T_M) *2	T_M = 20 [year]

*1 A test pulse is a signal which instantaneously turns off a signal to the servo amplifier at a constant period for external circuits to perform self-diagnosis.
*2 Although the special proof tests within the mission time of the safety sub-function is not needed to be performed, the suggested diagnostic test interval in IEC 61800-5-2: 2016 is at least one test per three months for Category 3 PL e, SIL 3.

Environment

Item		Operation	Transportation	Storage
Ambient temperature		0 ˚C to 60 ˚C (non-freezing) Class 3K3 (IEC 60721-3-3)	-25 ˚C to 70 ˚C (non-freezing) Class 2K12 (IEC 60721-3-2)	-25 ˚C to 70 ˚C (non-freezing) Class 1K4 (IEC 60721-3-1)
Ambient humidity		5 %RH to 95 %RH (non-condensing)	5 %RH to 95 %RH (non-condensing)	5 %RH to 95 %RH (non-condensing)
Ambience		Indoors (no direct sunlight); no corrosive gas, inflammable gas, oil mist or dust		
Altitude/atmospheric pressure		Altitude: 2000 m or less *1	Transportation conditions: Must be transported by ground/sea, or air at an atmospheric pressure of 700 hPa or more.	Atmospheric pressure: 700 hPa to 1060 hPa (equivalent to the altitude of -400 m to 3000 m.)
Vibration resistance		Under intermittent vibration: 10 Hz to 57 Hz, displacement amplitude 0.075 mm 57 Hz to 150 Hz, acceleration amplitude 9.8 m/s^2 Class 3M1 (IEC 60721-3-3) Under continuous vibration (in each of the X, Y, and Z directions): 10 Hz to 55 Hz, acceleration amplitude 5.9 m/s^2	2 Hz to 9 Hz, displacement amplitude (half amplitude) 7.5 mm 9 Hz to 200 Hz, acceleration amplitude 20 m/s^2 Class 2M3 (IEC 60721-3-2)	2 Hz to 9 Hz, displacement amplitude (half amplitude) 1.5 mm 9 Hz to 200 Hz, acceleration amplitude 5 m/s^2 Class 1M2 (IEC 60721-3-1)
Dielectric strength	200 V class	Between main circuit (power supply/power terminal) and PE: 1500 V AC, 1 minute, 50 Hz/60 Hz		
	400 V class	Between main circuit (power supply/power terminal) and PE: 2000 V AC, 1 minute, 50 Hz/60 Hz		
Insulation resistance		Between main circuit (power supply/power terminal) and PE: 0.5 MΩ or more (with a 500 V DC megger)		

*1 Refer to "Restrictions when using this product at altitude exceeding 1000 m and up to 2000 m" in the following manual for using the product at altitude exceeding 1000 m.
📖MR-J5 User's Manual (Hardware)

1.5 Function block diagram

The following shows the function block diagram of this servo amplifier.

200 V class

■7 kW or less

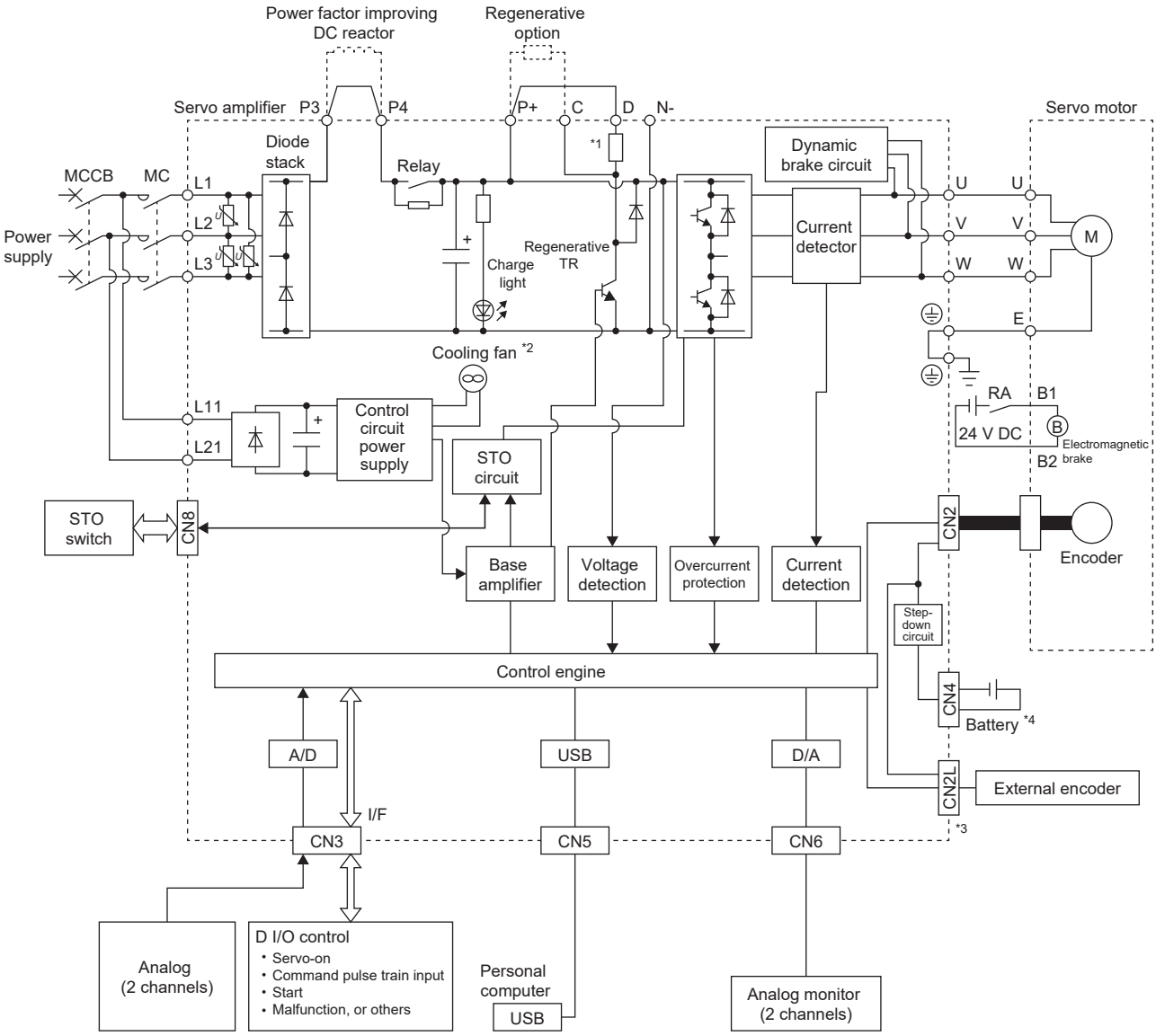

*1 The regenerative resistor is not built into the MR-J5-10A_.

*2 Servo amplifiers with the rated output symbol of 70 (MR-J5-70A_) or greater have a cooling fan.

*3 This is for the MR-J5-_A-RJ servo amplifier. The MR-J5-_A servo amplifier does not have a CN2L connector.

*4 To configure an absolute position detection system by using a direct drive motor, the battery is required. To configure the absolute position detection system by using the HK series servo motor, the battery is not required.

■12 kW or more

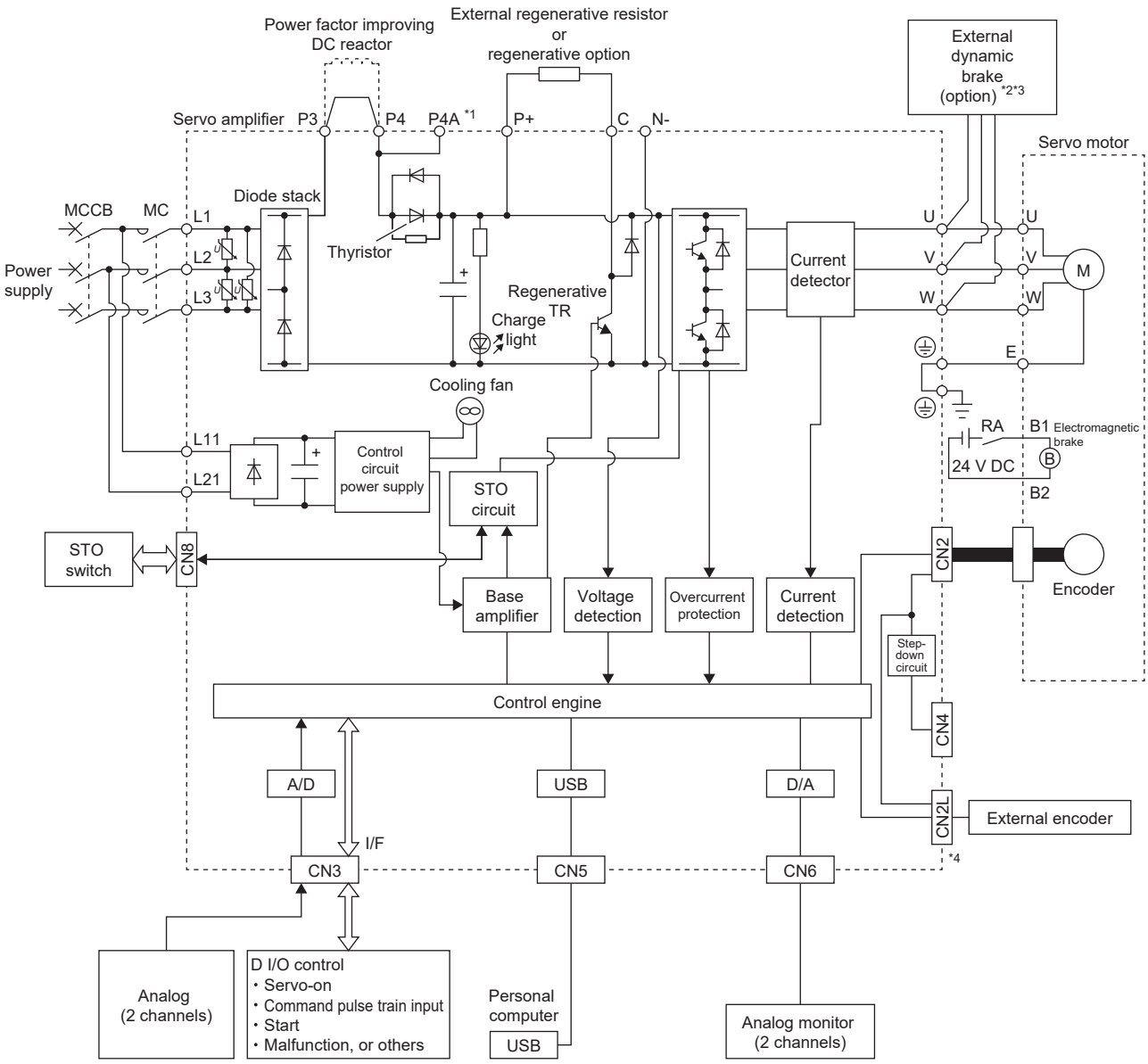

*1 The P4A terminal is connected to the P4 terminal inside the servo amplifier. The terminal is used when a common bus connection using a servo amplifier as the main unit is constructed.

*2 Use an external dynamic brake for this servo amplifier. Otherwise, the servo amplifier coasts without a quick stop after the occurrence of an alarm for which the deceleration stop is not executed. This may cause an accident. Ensure the safety in the entire system.

*3 To make the servo amplifier comply with the SEMI-F47 standard, the external dynamic brake cannot be used. Do not assign DB (dynamic brake interlock) to [Pr. PD23] to [Pr. PD28]. If DB (dynamic brake interlock) is assigned, the servo amplifier turns to the servo-off state when an instantaneous power failure occurs.

*4 The diagram is for the MR-J5-_A-RJ servo amplifier. The MR-J5-_A servo amplifier does not have a CN2L connector.

400 V class

■7 kW or less

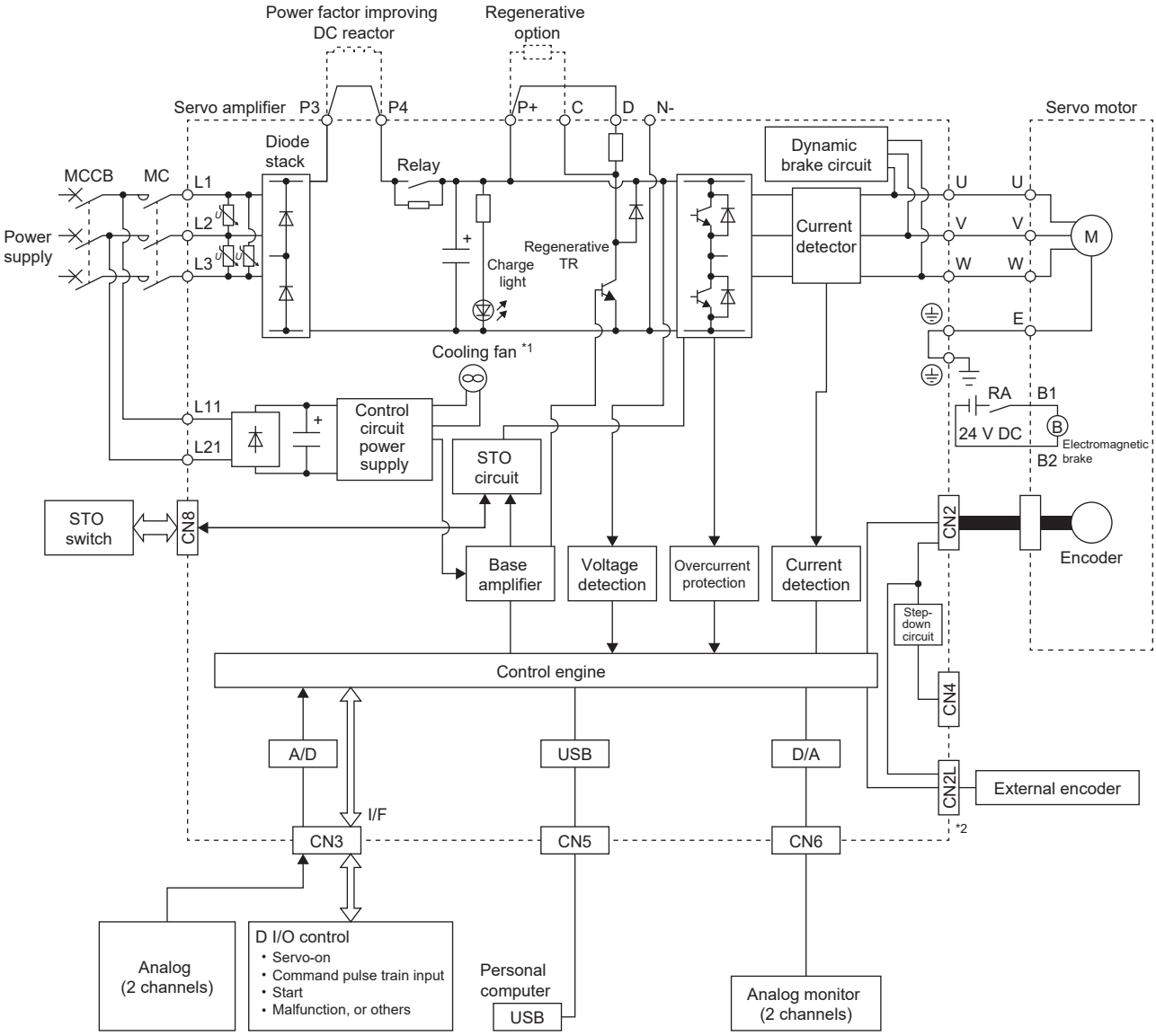

*1 Servo amplifiers with the rated output symbol of 200 (MR-J5-200A4_) or greater have a cooling fan.

*2 This is for the MR-J5-_A4-RJ servo amplifier. The MR-J5-_A4 servo amplifier does not have a CN2L connector.

■12 kW or more

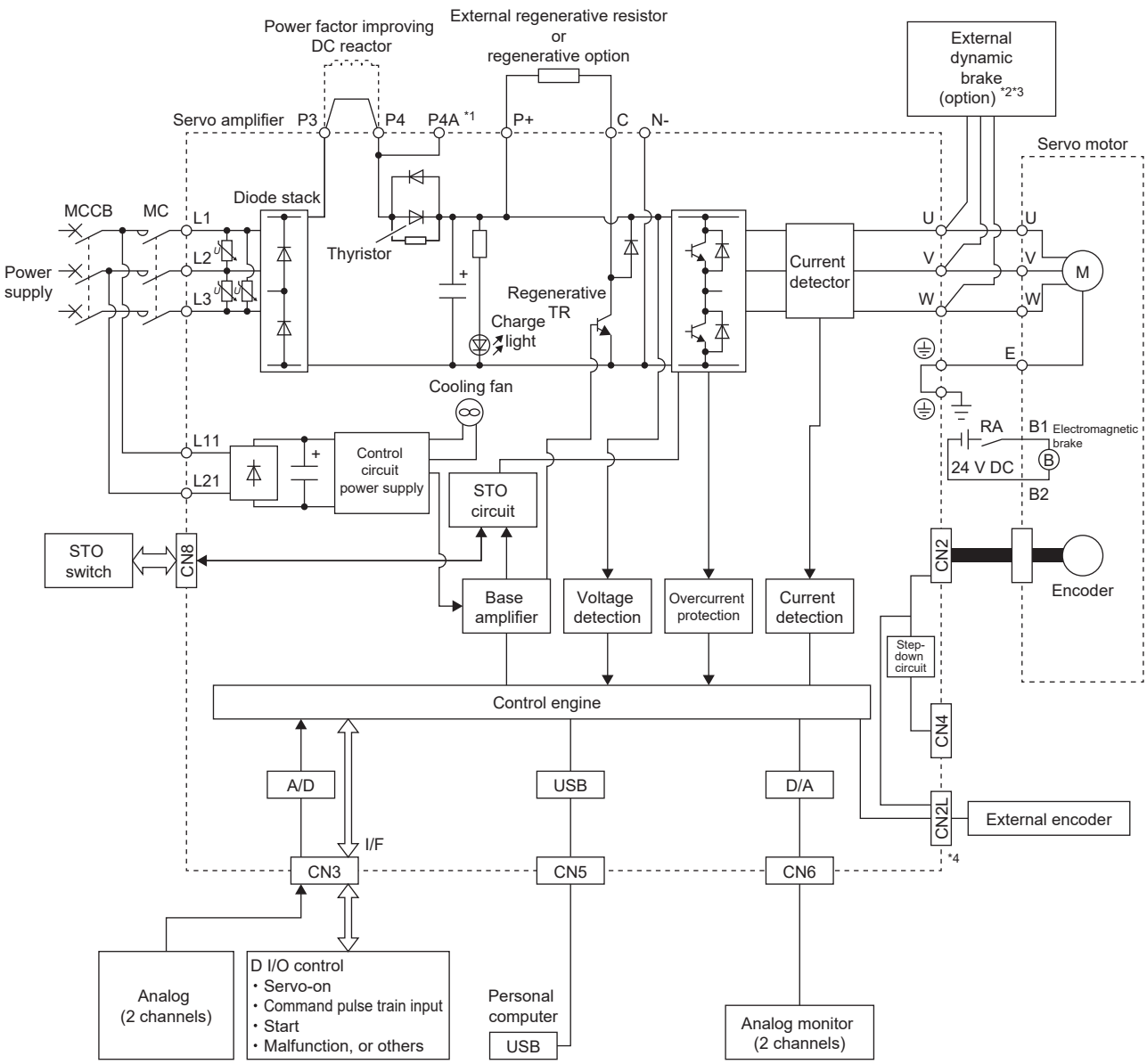

*1 The P4A terminal is connected to the P4 terminal inside the servo amplifier. The terminal is used when a common bus connection using a servo amplifier as the main unit is constructed.

*2 Use an external dynamic brake for this servo amplifier. Otherwise, the servo amplifier coasts without a quick stop after the occurrence of an alarm for which the deceleration stop is not executed. This may cause an accident. Ensure the safety in the entire system.

*3 To make the servo amplifier comply with the SEMI-F47 standard, the external dynamic brake cannot be used. Do not assign DB (dynamic brake interlock) to [Pr. PD23] to [Pr. PD28]. If DB (dynamic brake interlock) is assigned, the servo amplifier turns to the servo-off state when an instantaneous power failure occurs.

*4 The diagram is for the MR-J5-_A-RJ servo amplifier. The MR-J5-_A servo amplifier does not have a CN2L connector.

1.6 Configuration including peripheral equipment

Equipment other than the servo amplifier and servo motor is optional or a recommended product.

The following is an example using MR-J5-20A-RJ.

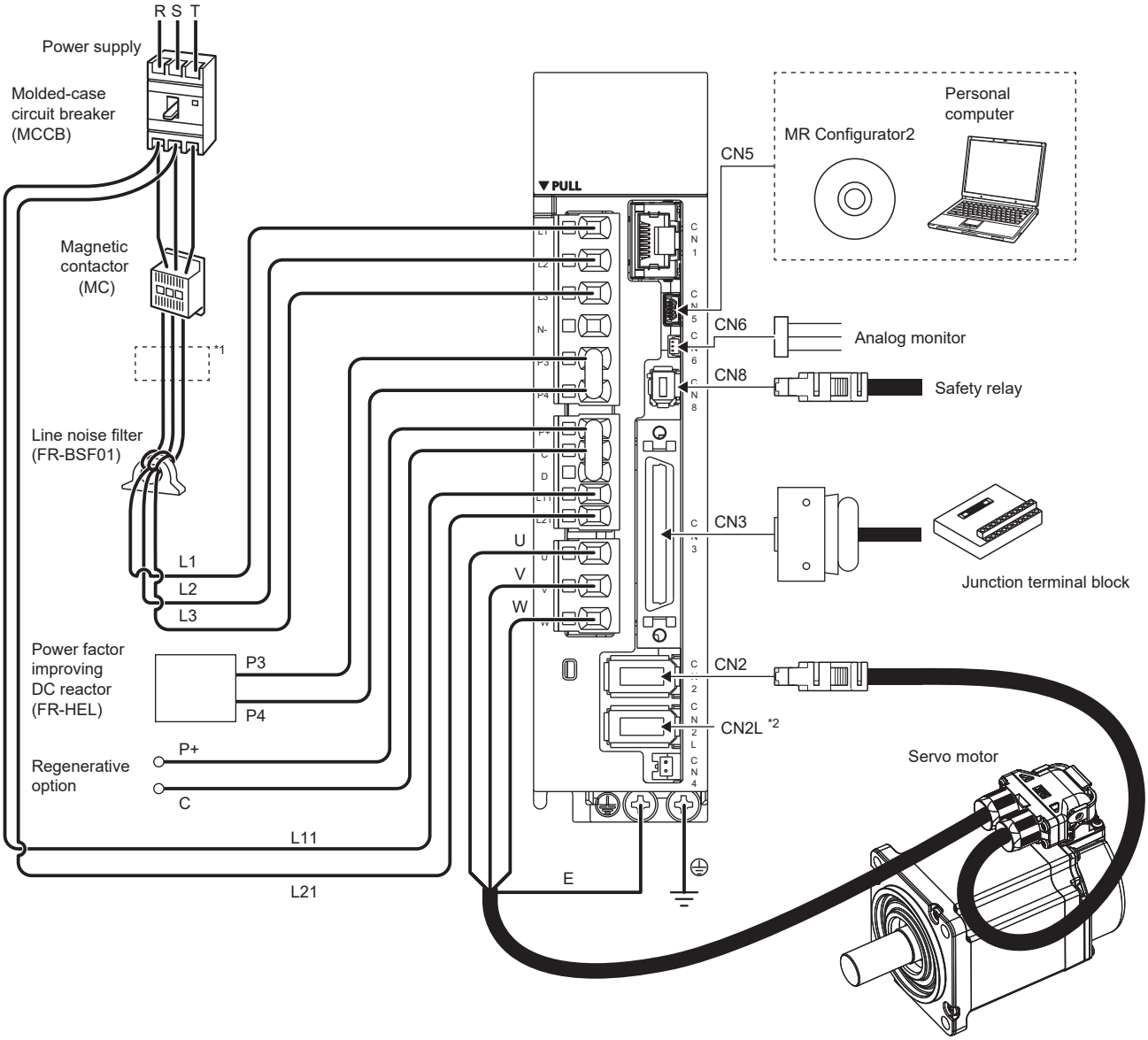

*1 The power factor improving AC reactor can also be used. In this case, the power factor improving DC reactor cannot be used.

*2 The MR-J5-_A servo amplifier does not have a CN2L connector. When using the MR-J5-_A servo amplifier in a linear servo system or fully closed loop system, connect an external encoder. For the external encoder connector and communication method, refer to the following.

☞ Page 33 Parts identification

1.7 Special specifications

Servo amplifiers without dynamic brake (-ED/-RU)

Summary

This section describes the servo amplifiers without dynamic brake. Items not described in this section are the same as those of the MR-J5-_A(4)(-RJ).

Specifications

The built-in dynamic brakes of the servo amplifiers with capacity of 7 kW or less are removed.
Take safety measures such as providing an extra circuit in case of an emergency stop, alarm, and servo motor stop at power supply shut-off.
When specific servo motors are being used, the electronic dynamic brake may be activated at an alarm occurrence.
For the specific servo motors, refer to "Precautions relating to the dynamic brake characteristics" in the following manual.
📖MR-J5 User's Manual (Hardware)
Setting the following servo parameter disables the electronic dynamic brake.

Servo amplifier	Servo parameter	Setting value
MR-J5-_A(4)-ED MR-J5-_A(4)-RU	[Pr. PF09.0]	2

When [Pr. PA04.3] is set to "2" (initial value), the forced stop deceleration function may be executed at an alarm occurrence.
Setting [Pr. PA04.3] to "0" disables the forced stop deceleration function.

Servo amplifiers without regenerative resister (-PX/-RZ)

Summary

This section describes the servo amplifiers without regenerative resistor. Items not described in this section are the same as those of the MR-J5-_A(4)(-RJ).

Specifications

The regenerative resistor, which is a standard accessory of servo amplifiers with a capacity of 12 kW to 25 kW, does not come with this type. When using this type of servo amplifier, use the regenerative option MR-RB5R, MR-RB9F, MR-RB9T, MR-RB5K-4, or MR-RB6K-4.

Special coating specification products (-EB/-RB)

Summary

This section describes the servo amplifiers with the special coating specification. Items not described in this section are the same as those of the MR-J5-_A(4)(-RJ).

Specifications

■Special coating

Using the MR-J5 series in the atmosphere containing corrosive gases may result in malfunction due to corrosion over time. For the special coating specification products, coating material is applied on the areas of the printed circuit boards used in the servo amplifiers where it can be technically applied (excluding connectors and terminal boards) to improve the resistance to corrosive gases. In particular, use special coating specification products for applications that tend to be affected by corrosive gases, such as tire manufacturing and water treatment. The resistance to corrosive gases of the special coating specification products is enhanced, however, it does not guarantee the use of the products in such environments. Inspect the products regularly to check for any abnormalities.

■Corrosive gases

According to JIS C60721-3-3/IEC 60721-3-3, corrosive gases refer to sea salt, sulfur dioxide, hydrogen sulfide, chlorine, hydrogen chloride, hydrogen fluoride, ammonia, ozone, and nitrogen oxides.
The special coating specification products have improved resistance to corrosion in environments with corrosive gases. Compared to the standard products, enhanced resistance to corrosive gases has been confirmed in a representative model.

2 FUNCTION

2.1 Function list

The function list of this servo amplifier is shown in the following table. For details of the functions, refer to each section indicated in the detailed explanation field.

Control mode

Functions	Detailed functions	Description	Ver. *1	Detailed explanation
Pulse/analog/DI command	Position control mode (P) (pulse train input)	This function operates the servo motor in the position control mode by the pulse train input.	A0	Refer to "CONTROL MODE" in the following manual. 📖MR-J5 User's Manual (Function)
	Speed control mode (S) (Internal speed command/analog speed command)	This function operates the servo motor in the speed control mode by the internal speed command or analog speed command.	A0	
	Torque control mode (T) (Analog torque command)	This function operates the servo motor in the torque control mode by the analog torque command.	A0	
Test operation	Test operation mode	This function requires MR Configurator2 for JOG operation, positioning operation, motor-less operation, DO forced output, and program operation.	A0	☞ Page 67 Test operation

*1 "Ver." indicates the supported firmware version of the servo amplifier. The functions are available on servo amplifiers with the indicated firmware version or later.

Drive motor

Functions	Detailed functions	Description	Ver. *1	Detailed explanation
Servo motor	Linear servo motor	Using the linear servo motor and linear encoder enables the linear servo system to be configured.	A0	Refer to "USING A LINEAR SERVO MOTOR" in the following manual. 📖MR-J5 User's Manual (Hardware)
	Direct drive motor	Using this function enables the direct drive servo system to be configured to drive the direct drive motor.	A0	Refer to "USING A DIRECT DRIVE MOTOR" in the following manual. 📖MR-J5 User's Manual (Hardware)
Encoder	High-resolution encoder	A 67108864 pulses/rev high-resolution encoder is used for the encoder of the rotary servo motor.	A0	—
	Batteryless absolute position encoder	The rotation position of the servo motor can be backed up without the battery. Using the servo motor with this encoder enables an absolute value detection system to be configured without battery.	A0	Refer to "ABSOLUTE POSITION DETECTION SYSTEM" in the following manual. 📖MR-J5 User's Manual (Hardware)

*1 "Ver." indicates the supported firmware version of the servo amplifier. The functions are available on servo amplifiers with the indicated firmware version or later.

Network

Functions	Detailed functions	Description	Ver. *1	Detailed explanation
Remote maintenance	Firmware update	This function updates the firmware of the servo amplifier.	A0	Refer to "Firmware update" in the following manual. 📖MR-J5 User's Manual (Function)

*1 "Ver." indicates the supported firmware version of the servo amplifier. The functions are available on servo amplifiers with the indicated firmware version or later.

Position detection

Functions	Detailed functions	Description	Ver. *1	Detailed explanation
Control method	Semi closed loop system	This function uses the servo motor encoder to configure semi closed loop systems.	A0	—
	Fully closed loop system	This function uses the load-side encoder to configure fully closed loop systems.	A5	Refer to "USING A FULLY CLOSED LOOP SYSTEM" in the following manual. 📖MR-J5 User's Manual (Hardware)
Absolute position	Absolute position detection system	This function performs homing once, and thereafter does not require homing at every power-on.	A0	Refer to "ABSOLUTE POSITION DETECTION SYSTEM" in the following manual. 📖MR-J5 User's Manual (Hardware)

*1 "Ver." indicates the supported firmware version of the servo amplifier. The functions are available on servo amplifiers with the indicated firmware version or later.

Operation function

Functions	Detailed functions	Description	Ver. *1	Detailed explanation
Stop function	Stroke limit function	This function uses LSP (Forward rotation stroke end) and LSN (Reverse rotation stroke end) to limit the travel interval of the servo motor.	A0	Refer to "Stroke limit function" in the following manual. 📖MR-J5 User's Manual (Function)
Command generation	Command pulse selection	The command pulse train form can be selected from among three different types.	A0	Refer to "Position control mode (P)" in the following manual. 📖MR-J5 User's Manual (Function)
	Rotation/travel direction selection	This function sets the rotation direction of the servo motor without changing the command polarity.	A0	Refer to "Rotation/travel direction selection" in the following manual. 📖MR-J5 User's Manual (Function)
	Electronic gear	This function performs positioning control with the value obtained by multiplying the position command from the upper controller by a set electronic gear ratio.	A0	Refer to "Electronic gear function" in the following manual. 📖MR-J5 User's Manual (Function)
	Acceleration/deceleration function	This function sets the time constant of acceleration and deceleration.	A0	Refer to "Acceleration/ deceleration function" in the following manual. 📖MR-J5 User's Manual (Function)
	S-pattern acceleration/ deceleration time constant	This function performs smooth acceleration and deceleration.	A0	Refer to "S-pattern acceleration/deceleration time constant" in the following manual. 📖MR-J5 User's Manual (Function)
	Torque limit	This function limits the servo motor torque.	A0	Refer to "Torque limit" in the following manual. 📖MR-J5 User's Manual (Function)
	Speed limit	This function limits the servo motor speed in the torque control mode.	A0	Refer to "Speed limit" in the following manual. 📖MR-J5 User's Manual (Function)

*1 "Ver." indicates the supported firmware version of the servo amplifier. The functions are available on servo amplifiers with the indicated firmware version or later.

Control function

Functions	Detailed functions	Description	Ver. *1	Detailed explanation
Vibration suppression	Advanced vibration suppression control II	This function suppresses vibration and residual vibration at an arm end.	A0	Refer to "Advanced vibration suppression control II" in the following manual. 📖MR-J5 User's Manual (Adjustment)
	Machine resonance suppression filter	This function decreases the gain of the specific frequency to suppress the resonance of the mechanical system.	A0	Refer to "Machine resonance suppression filter" in the following manual. 📖MR-J5 User's Manual (Adjustment)
	Shaft resonance suppression filter	When driving the servo motor with a load mounted to the servo motor shaft, resonance due to shaft torsion may generate high frequency mechanical vibration. The shaft resonance suppression filter suppresses this vibration.	A0	Refer to "Shaft resonance suppression filter" in the following manual. 📖MR-J5 User's Manual (Adjustment)
	Robust filter	This function improves a disturbance response when a response performance cannot be increased because of a large load to motor inertia ratio, such as a roll feed axis.	A0	Refer to "Robust filter" in the following manual. 📖MR-J5 User's Manual (Adjustment)
	Slight vibration suppression control	This function suppresses vibration of ±1 pulse generated at each servo motor stop.	A0	Refer to "SLIGHT VIBRATION SUPPRESSION CONTROL" in the following manual. 📖MR-J5 User's Manual (Adjustment)
Tracking control	Lost motion compensation function	This function reduces the response delay generated when the machine moving direction is reversed.	A0	Refer to "Lost motion compensation function" in the following manual. 📖MR-J5 User's Manual (Adjustment)
	Super trace control	This function reduces the droop pulses at the rated speed and at the uniform acceleration/deceleration to almost zero.	A5	Refer to "Super trace control" in the following manual. 📖MR-J5 User's Manual (Adjustment)
	Path tracking model adaptive control	This function reduces tracking errors in reciprocation.	A0	Refer to "Path tracking model adaptive control" in the following manual. 📖MR-J5 User's Manual (Adjustment)

*1 "Ver." indicates the supported firmware version of the servo amplifier. The functions are available on servo amplifiers with the indicated firmware version or later.

Adjustment function

Functions	Detailed functions	Description	Ver. *1	Detailed explanation
Automatic adjustment	Quick tuning	This function automatically adjusts the gain at servo-on in a short time without acceleration/ deceleration operation of the servo motor. Response without overshoot is possible, saving gain adjustment time.	A0	Refer to "Quick tuning" in the following manual. 📖MR-J5 User's Manual (Adjustment)
	Auto tuning	This function automatically adjusts the gain to an optimum value even if the load applied to the servo motor shaft varies.	A0	Refer to "ADJUSTMENT FUNCTION TYPES" in the following manual. 📖MR-J5 User's Manual (Adjustment)
	One-touch tuning	Gain adjustment is performed with this function just by pressing buttons on the servo amplifier or by clicking a button once on MR Configurator2.	A0	Refer to "One-touch tuning" in the following manual. 📖MR-J5 User's Manual (Adjustment)
Custom adjustment	Model adaptive control	This function enables control according to the ideal model that is both stable and highly responsive. This is a two-degrees-of-freedom model and can adjust responses to commands and disturbances separately. This function can also be disabled.	A0	Refer to "MODEL ADAPTIVE CONTROL" in the following manual. 📖MR-J5 User's Manual (Adjustment)
	Gain switching function	This function switches gains during rotation and during stop, and uses an input device to switch gains during operation. It supports the gain switching by rotation direction and the 3-step gain switching. Therefore, more detailed gain switching is available.	A0	Refer to "GAIN SWITCHING FUNCTION" in the following manual. 📖MR-J5 User's Manual (Adjustment)
Adjustment support	Machine analyzer	This function analyzes the frequency characteristic of the mechanical system by simply connecting the servo amplifier with an MR Configurator2 installed personal computer.	A0	Refer to "Adjustment functions available in combination with MR Configurator2" in the following manual. 📖MR-J5 User's Manual (Adjustment)

*1 "Ver." indicates the supported firmware version of the servo amplifier. The functions are available on servo amplifiers with the indicated firmware version or later.

I/O, monitor

Functions	Detailed functions	Description	Ver. *1	Detailed explanation
DI/DO	Input signal selection (device selection)	This function assigns input devices such as LSP (Forward rotation stroke end) to certain pins of the connector.	A0	Refer to "Assigning I/O devices" in the following manual. 📖MR-J5 User's Manual (Function)
	Output signal selection (device setting)	This function assigns output devices such as MBR (Electromagnetic brake interlock) to certain pins of the connector.	A0	
	Output signal (DO) forced output	This function forcibly switches the output signals on and off regardless of the servo status. Use this function for purposes such as checking output signal wiring.	A0	☞ Page 72 Output signal (DO) forced output
	External I/O signal display	This function shows the on/off status of external I/O signals on the display.	A0	☞ Page 49 External I/O signal display
	A/B/Z-phase output	This function outputs the positions of the encoder and linear encoder in the A/B/Z-phase signal.	A0	Refer to "A/B/Z-phase pulse output function" in the following manual. 📖MR-J5 User's Manual (Function)
LED	Status display	This function shows the servo status on the 7-segment LED display.	A0	☞ Page 35 Switch setting and display of the servo amplifier
Analog input/output	Analog command input automatic offset	Voltage is automatically offset to stop the servo motor if it does not come to a stop when an analog input such as VC (Analog speed command) or VLA (Analog speed limit) is 0 V.	A0	☞ Page 44 Diagnostic mode
	High-resolution analog input	When using the MR-J5-_A-RJ, the analog input resolution is 16 bits.	A0	—
	Analog monitor	This function outputs the servo status in voltage in real time.	A0	Refer to "MONITORING" in the following manual. 📖MR-J5 User's Manual (Function)
Monitor	Power monitoring function	This function calculates the running power and the regenerative power from the data in the servo amplifier such as speed and current. The power consumption and other values are displayed on MR Configurator2.	A0	

*1 "Ver." indicates the supported firmware version of the servo amplifier. The functions are available on servo amplifiers with the indicated firmware version or later.

Option

Functions	Detailed functions	Description	Ver. *1	Detailed explanation
Regenerative capacity enhancement	MR-CM3K Simple converter	This function enables servo amplifiers to be used in a common DC bus connection. Utilizing the regenerative power contributes to energy-conservation. In addition, it decreases the number of molded case circuit breakers and magnetic contactors.	A0	Refer to "MR-CM3K simple converter" in the following manual. 📖MR-J5 User's Manual (Hardware)
	MR-CM08K1 Simple converter	200 V class servo amplifiers can be used with a 1-phase 100 V AC power supply input. This function enables servo amplifiers to be used in a common DC bus connection. Utilizing the regenerative power contributes to energy-conservation. In addition, it decreases the number of molded case circuit breakers and magnetic contactors.	F0	Refer to "MR-CM08K1 simple converter" in the following manual. 📖MR-J5 User's Manual (Hardware)
	Regenerative option	Use this function if the built-in regenerative resistor of the servo amplifier does not have sufficient regenerative capacity for the generated regenerative power.	A0	Refer to "Regenerative option" in the following manual. 📖MR-J5 User's Manual (Hardware)
	Multifunction regeneration converter	This function returns the regenerative energy generated at servo motor deceleration to the power supply. The bus voltage can be standardized among multiple servo amplifiers.	B0	Refer to "FR-XC-(H) multifunction regeneration converter" in the following manual. 📖MR-J5 User's Manual (Hardware)

*1 "Ver." indicates the supported firmware version of the servo amplifier. The functions are available on servo amplifiers with the indicated firmware version or later.

Engineering software

Functions	Detailed functions	Description	Ver. *1	Detailed explanation
Setup software	MR Configurator2	This function performs settings (such as servo parameter settings), test operation, and monitoring with a personal computer.	A0	☞ Page 53 STARTUP

*1 "Ver." indicates the supported firmware version of the servo amplifier. The functions are available on servo amplifiers with the indicated firmware version or later.

Protective function

Functions	Detailed functions	Description	Ver. *1	Detailed explanation
Alarm	Alarm function	This function displays an alarm or warning when an error occurs during operation. When an alarm occurs, ALM (Malfunction) turns off and stops the servo motor. When a warning occurs, WNG (Warning) will turn on. The servo motor may stop or continue operation depending on the warning.	A0	Refer to "Alarm function" in the following manual. 📖MR-J5 User's Manual (Function)
Power error detection	Disconnection detection function	This function detects a disconnection in the main circuit power supply input and the servo motor power supply output.	A0	Refer to "Disconnection/ incorrect wiring detection function" in the following manual. 📖MR-J5 User's Manual (Function)
Coasting distance reduction	Forced stop deceleration function	This function decelerates the servo motor to a stop at EM2 (Forced stop 2) off or when there is an alarm.	A0	Refer to "Forced stop deceleration function" in the following manual. 📖MR-J5 User's Manual (Function)
Drop protection	Electromagnetic brake interlock function	This function operates the electromagnetic brake at servo off and error occurrence, and prevents the vertical axis from dropping.	A0	Refer to "Electromagnetic brake interlock function" in the following manual. 📖MR-J5 User's Manual (Function)
	Vertical axis freefall prevention function	This function moves the axis up by the mechanical backlash amount of the electromagnetic brake to prevent damage to machines.	A0	Refer to "Vertical axis freefall prevention function" in the following manual. 📖MR-J5 User's Manual (Function)
Braking protection	Dynamic brake	During the power shut-off and alarm occurrence, this function shorts between U, V, and W phases and operates the dynamic brake.	A0	Refer to "Dynamic brake characteristics" in the following manual. 📖MR-J5 User's Manual (Hardware)

*1 "Ver." indicates the supported firmware version of the servo amplifier. The functions are available on servo amplifiers with the indicated firmware version or later.

Functional safety

Functions	Detailed functions	Description	Ver. *1	Detailed explanation
Single servo amplifier function	STO function	This servo amplifier supports the STO function for functional safety as per IEC/EN 61800-5-2. This allows a safety system to be easily configured for the equipment.	A0	Refer to "USING STO FUNCTION" in the following manual. 📖MR-J5 User's Manual (Hardware)

*1 "Ver." indicates the supported firmware version of the servo amplifier. The functions are available on servo amplifiers with the indicated firmware version or later.

Instantaneous power failure measures

Functions	Detailed functions	Description	Ver. *1	Detailed explanation
Tough drive	SEMI-F47 function	This function uses the electrical energy charged in the capacitor to avoid triggering [AL. 010 Undervoltage] in case that an instantaneous power failure occurs during operation. Use a 3-phase power supply for the input power supply of the servo amplifier. Using a 1-phase 200 V AC for the input power supply will not comply with SEMI-F47 standard.	A0	Refer to "Compliance with SEMI-F47 standard" in the following manual. 📖MR-J5 User's Manual (Function)
	Tough drive function	This function makes the equipment continue operating even under conditions where an alarm would normally occur. There are two types of tough drive function: the vibration tough drive and the instantaneous power failure tough drive.	A0	Refer to "Tough drive function" in the following manual. 📖MR-J5 User's Manual (Function)

*1 "Ver." indicates the supported firmware version of the servo amplifier. The functions are available on servo amplifiers with the indicated firmware version or later.

Diagnostics

Functions	Detailed functions	Description	Ver. *1	Detailed explanation
Drive data diagnosis	Drive recorder	This function continuously monitors the servo status and records the state transition before and after an alarm for a fixed period of time. The recorded data can be checked by the Waveform-Display button on the drive recorder window of MR Configurator2 being clicked.	A0	Refer to "Drive recorder" in the following manual. 📖MR-J5 User's Manual (Function)
	Graph function	This function obtains the servo status in the graph.	A0	Refer to "Graph function" in the following manual. 📖MR-J5 User's Manual (Function)
Failure diagnosis	Encoder communication diagnosis function	This function diagnoses with MR Configurator2 whether the encoder communication error is caused by the circuit malfunction of the servo amplifier or by the malfunction of the cables/ encoder.	A0	Refer to "Encoder communication diagnosis function" in the following manual. 📖MR-J5 User's Manual (Function)
Service life diagnosis	Servo amplifier life diagnosis function	This function enables checking of the cumulative energization time and the number of inrush relay on/off times. It gives an indication of the replacement time for parts on the servo amplifier with a service life (such as the capacitor and the relay) before they malfunction. MR Configurator2 is required for this function.	A0	Refer to "Servo amplifier life diagnosis function" in the following manual. 📖MR-J5 User's Manual (Function)
	Motor life diagnosis function	This function predicts failures of the equipment and the servo motor based on the machine total travel distance. It gives an indication of the replacement time for the servo motor.	A0	Refer to "Machine diagnosis" in the following manual. 📖MR-J5 User's Manual (Function)
	Machine diagnosis function	This function uses the data in the servo amplifier to estimate the friction and vibrational component of the drive system in the equipment and to recognize an error in machine parts such as ball screws and bearings.	A0	
		This function automatically sets the threshold used for detecting the error of machine parts such as ball screws and bearings. It outputs the warning when the friction, vibrational component, and total revolution of the servo motor are out of the set threshold. The error in the machine parts such as ball screws and bearings can be detected automatically.	A0	
		This function estimates the friction of gears and loosening of belts (decrease in the belt tension), and detects errors in the gears and belts.	A0	
System diagnosis	System configuration information	This function uses MR Configurator2 to monitor the servo amplifier model, connected servo motor, encoder, and other information.	A0	Refer to "System configuration display" in the following manual. 📖MR-J5 User's Manual (Function)

*1 "Ver." indicates the supported firmware version of the servo amplifier. The functions are available on servo amplifiers with the indicated firmware version or later.

History

Functions	Detailed functions	Description	Ver. *1	Detailed explanation
—	Alarm history	This function saves information of the alarm that occurred in the servo amplifier. The information is saved in chronological order and used for occasions such as analyzing the cause of the alarm.	A0	Refer to "Alarm history" in the following manual. 📖MR-J5 User's Manual (Function)

*1 "Ver." indicates the supported firmware version of the servo amplifier. The functions are available on servo amplifiers with the indicated firmware version or later.

2.2 Security

To completely prevent unauthorized access to the system from external devices, the user also must take safety measures. Mitsubishi Electric Corporation cannot be held responsible for any problems caused by unauthorized access.

3 STRUCTURE

The flame retardancy of the resin material used for the cabinet of the servo amplifier (excluding the display cover) and printing board is UL94 V-0.

3.1 Parts identification

MR-J5-_A_

The diagram shows MR-J5-10A-RJ.

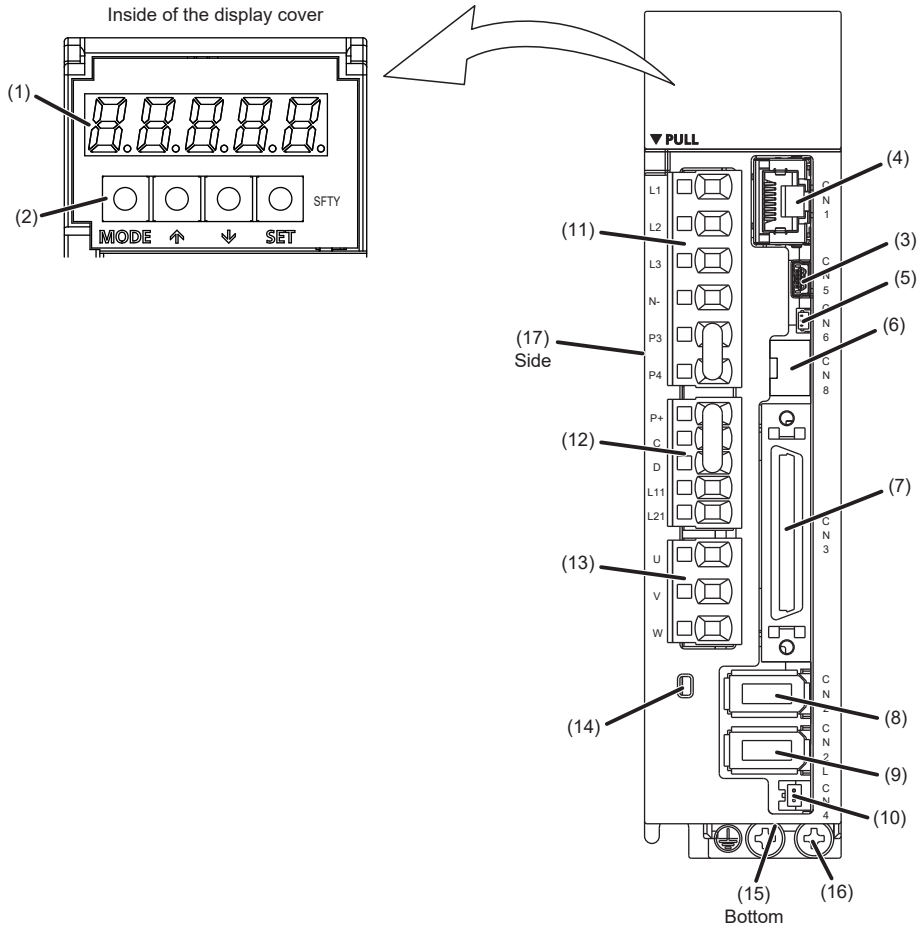

No.	Name	Application	Detailed explanation
(1)	Display section	The 5-digit, 7-segment LED display shows the servo status and alarm number.	☞ Page 35 Switch setting and display of the servo amplifier
(2)	Operation section	Used to perform status display, diagnostic, alarm, and servo parameter setting operations. Push the "MODE" and "SET" at the same time for 3 s or more to switch to the one-touch tuning mode.	☞ Page 35 Switch setting and display of the servo amplifier
(3)	USB communication connector (CN5)	Connect with a personal computer.	—
(4)	Ethernet cable connector (CN1)	Connect with a personal computer.	—
(5)	Analog monitor connector (CN6)	Outputs the analog monitor.	Refer to "Connectors and pin assignments" in the following manual. 📖MR-J5 User's Manual (Hardware)
(6)	Functional safety I/O signal connector (CN8)	Connect an external safety relay to use the STO function.	Refer to "USING STO FUNCTION" in the following manual. 📖MR-J5 User's Manual (Hardware)

No.	Name	Application	Detailed explanation
(7)	I/O signal connector (CN3)	Connect the digital I/O signals.	Refer to "Connectors and pin assignments" in the following manual. 📖MR-J5 User's Manual (Hardware)
(8)	Encoder connector (CN2)	Connect a servo motor encoder or an external encoder.	☞ Page 34 External encoder connector
(9) *1	External encoder connector (CN2L)	Connect the external encoder.	☞ Page 34 External encoder connector
(10)	Battery connector (CN4)	To use the direct drive motor, connect the battery for absolute position data backup.	Refer to "ABSOLUTE POSITION DETECTION SYSTEM" in the following manual. 📖MR-J5 User's Manual (Hardware)
(11)	Main circuit power connector (CNP1) *2	Connect the input power supply.	Refer to "Explanation of power supply system" in the following manual. 📖MR-J5 User's Manual (Hardware)
(12)	Control circuit power connector (CNP2) *2	Connect the control circuit power supply and regenerative option.	
(13)	Servo motor power output connector (CNP3) *2	Connect the servo motor.	
(14)	Charge light	When the main circuit is charged, this light is on. While the light is on, do not change the connections of the wires.	—
(15)	Battery holder	Install the battery for absolute position data backup.	Refer to "DIMENSIONS" in the following manual. 📖MR-J5 User's Manual (Hardware)
(16)	Protective earth (PE) terminal	Connect this terminal to the protective earth (PE) of the cabinet.	Refer to "Explanation of power supply system" in the following manual. 📖MR-J5 User's Manual (Hardware)
(17)	Rating plate	Indicates model, capacity, and other information.	☞ Page 8 Rating plate

*1 This is for the MR-J5-_A-RJ servo amplifier. The MR-J5-_A servo amplifier does not have a CN2L connector.
*2 When a servo amplifier with a capacity of 12 kW or more is used, connect the power supply system to the terminal block. For the terminal name/assignment, refer to "DIMENSIONS" in the following manual.
📖MR-J5 User's Manual (Hardware)

■External encoder connector

The external encoder of A/B/Z-phase differential output type can be connected using the CN2L connector. The following table shows the communication method of the external encoder compatible with the MR-J5-_A_ and MR-J5-_A_-RJ servo amplifiers.

System configuration	External encoder communication method	Connector	
		MR-J5-_A_	MR-J5-_A_-RJ
Linear servo system	Two-wire type	CN2 *1	CN2 *1
	Four-wire type		
	A/B/Z-phase differential input	—	CN2L *4
Fully closed loop system *5	Two-wire type	CN2 *2*3	CN2L
	Four-wire type	—	
	A/B/Z-phase differential input		

*1 The MR-J4THCBL03M branch cable is required.
*2 The MR-J4FCCBL03M branch cable is required.
*3 If the external encoder communication method is the four-wire type, CN2 cannot be used. In that case, use the MR-J5-_A_-RJ.
*4 Connect a thermistor to CN2.
*5 Available on servo amplifiers with firmware version A5 or later.

3.2 Switch setting and display of the servo amplifier

Outline

The MR-J5-_A_ servo amplifier has the display section (5-digit, 7-segment LED) and operation section (4 push buttons) for servo amplifier status display, alarm display, servo parameter setting, etc.
Push the "MODE" and "SET" buttons at the same time for 3 s or longer to switch to the one-touch tuning mode.

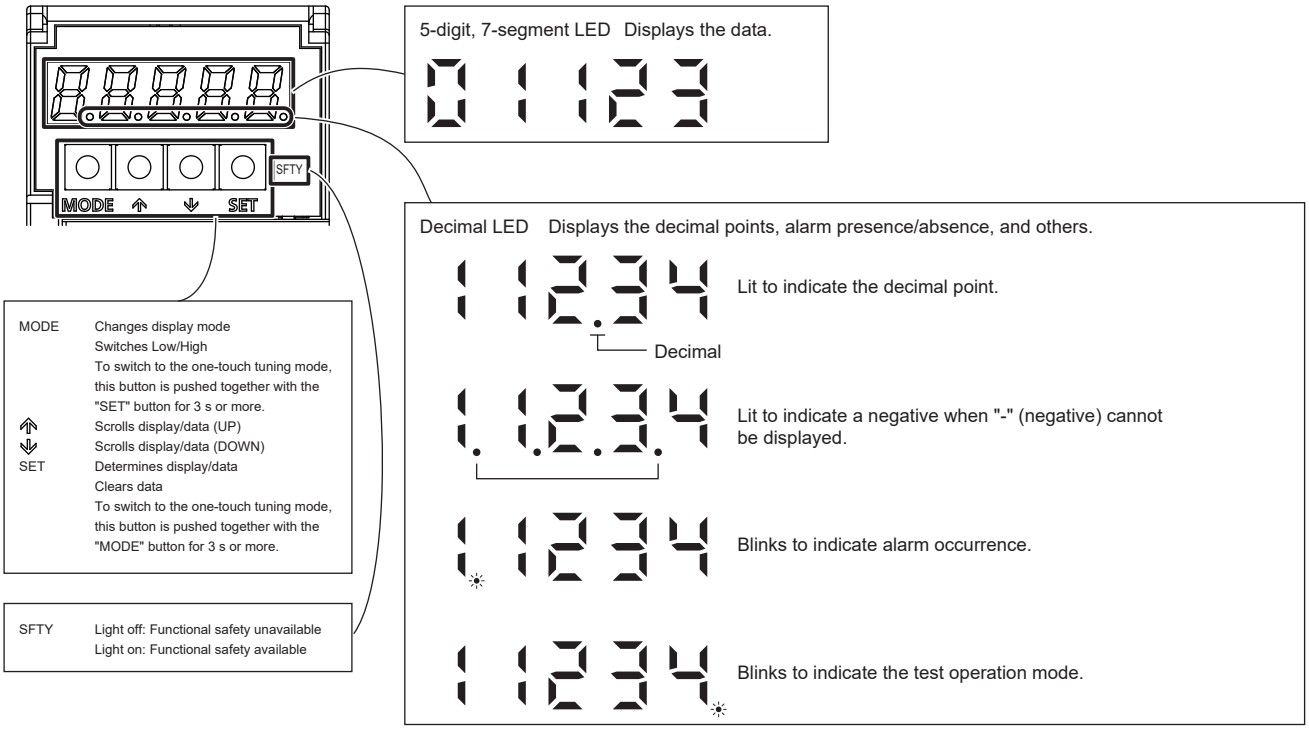

Display sequence

Press the "MODE" button once to shift to the next display mode.
Use the basic setting parameters [Pr. PA19 Parameter writing prohibited] to refer to and operate the gain/filter parameters, extension setting parameters, and I/O setting parameters.

Display mode transition	Initial screen	Functions	Reference
Status display	C	The servo status is displayed. The display at power-on differs depending on each operation mode.*1	☞ Page 37 Status display
One-touch tuning	AUto	Select this when performing the one-touch tuning.	Refer to "One-touch tuning" in the following manual. 📖MR-J5 User's Manual (Adjustment)
Diagnostics	rd-oF	The status display of each servo amplifier such as sequence display and external I/O signal display and test operation are enabled.	☞ Page 44 Diagnostic mode
Alarm	A----	The current alarm, alarm history, and servo parameter error No. are displayed.	☞ Page 46 Alarm mode

Display mode transition	Initial screen	Functions	Reference
Basic setting servo parameters	P A01	The basic setting parameters can be displayed and set.	☞ Page 47 Parameter mode
Gain/filter servo parameters	P b01	The gain/filter parameters can be displayed and set.	
Extension setting servo parameters	P C01	The extension setting parameters can be displayed and set.	
I/O setting servo parameters	P d01	The I/O setting parameters can be displayed and set.	
Extension setting 2 servo parameters	P E01	The extension setting 2 parameters can be displayed and set.	
Extension setting 3 servo parameters	P F01	The extension setting 3 parameters can be displayed and set.	
For manufacturer setting	P n01	This is for manufacturer setting.	
For manufacturer setting	P S01	This is for manufacturer setting.	
Motor extension setting parameters	P L01	The motor extension setting parameters can be displayed and set.	
For manufacturer setting	P r01	This is for manufacturer setting.	
For manufacturer setting	P n01	This is for manufacturer setting.	
For manufacturer setting	P u01	This is for manufacturer setting.	

*1 When the axis name is set to the servo amplifier using MR Configurator2, the servo status is displayed after the axis name is displayed.

Status display

The servo status during operation is shown on the 5-digit, 7-segment LED display. Press "UP" or "DOWN" to change display data as desired. When the servo status is selected, the corresponding symbol is displayed. Press "SET" to display its data. Only at power-on, the symbol of the status display selected with [Pr. PC36] is displayed for 2 s, and then the data is displayed.

Display transition

After selecting the status display mode by pressing "MODE", pressing "UP" or "DOWN" button changes the display as follows. The status that can be displayed differs depending on the operation mode or control mode. Refer to the following for details.

☞ Page 38 Status display list

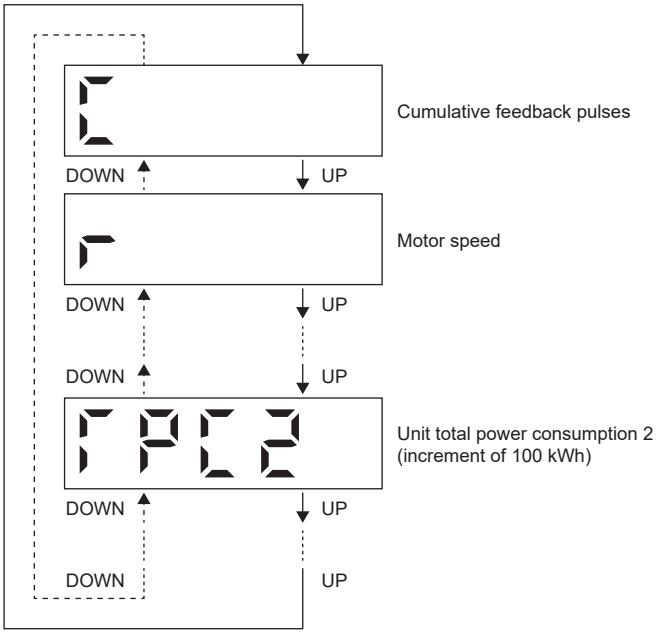

Display examples

Item	Status	Display method
Servo motor speed	2500 r/min in the forward rotation	2500
	3000 r/min in the reverse rotation	-3000
Load to motor inertia ratio	7.00 multiplier	7.00
ABS counter	11252 rev	11252
	-12566 rev	1.2.5.6.6 The negative 5-digit number is indicated by the lit decimal points of the upper four digits.

Status display list

Status display	Symbol	Unit	Description	Control mode *1			Operation mode *2	
				P	S	T	Semi closed	Fully closed
Cumulative feedback pulses	C	pulse	The feedback pulses from a servo motor encoder are counted and displayed. The values in excess of ±99999 can be counted. However, the counter shows only the lower five digits of the actual value because the servo amplifier display is five digits. Press the "SET" button to reset the display value to "0". The decimal points in the upper four digits are lit for a negative value.	○	○	○	○	○
Servo motor speed/ linear servo motor speed	r	r/min or mm/s	The servo motor speed is displayed. It is displayed rounding off 0.1 r/min (0.1 mm/s) unit.	○	○	○	○	○
Droop pulse	E	pulse	The number of droop pulses in the deviation counter is displayed. The decimal points in the upper four digits are lit for reverse rotation pulses. The values in excess of ±99999 can be counted. However, the counter shows only the lower five digits of the actual value because the servo amplifier display is five digits. The number of pulses is displayed in the units of encoder pulses.	○	○	○	○	○
Cumulative command pulses	P	pulse	Position command input pulses are counted and displayed. As the value before being multiplied by the electronic gear (CMX/CDV) is displayed, the value may not match the indicated cumulative feedback pulses. The values in excess of ±99999 can be counted. However, the counter shows only the lower five digits of the actual value because the servo amplifier display is five digits. Press the "SET" button to reset the display value to "0". When the servo motor is rotating in the reverse direction, the decimal points in the upper four digits are lit.	○	○	○	○	○
Command pulse frequency	n	kpulse/s	The frequency of the position command input pulses is displayed. The value before being multiplied by the electronic gear (CMX/CDV) is displayed.	○	○	○	○	○
Analog speed limit voltage	F	V	The input voltage of VLA (Analog speed limit) is displayed.	×	×	○	○	×
Analog speed command voltage			The input voltage of VC (Analog speed command) is displayed.	×	○	×	○	×
Analog torque limit voltage	U	V	The voltage of TLA (Analog torque limit) is displayed.	○	○	×	○	○
Analog torque command voltage			The voltage of TC (Analog torque command) is displayed.	×	×	○	○	×

Status display	Symbol	Unit	Description	Control mode *1			Operation mode *2	
				P	S	T	Semi closed	Fully closed
Regenerative load ratio	L	%	The ratio of regenerative power to permissible regenerative power is displayed in %.	○	○	○	○	○
Effective load ratio	J	%	The continuous effective load current is displayed. The effective value in the past 15 s is displayed in relation to the rated current (= 100 %).	○	○	○	○	○
Peak load ratio	b	%	The maximum generated torque is displayed. The highest value in the past 15 s is displayed relative to the rated torque as 100 %.	○	○	○	○	○
Instantaneous torque	r	%	The instantaneous torque is displayed. The rated torque is displayed as 100 %. The value of the generated torque is displayed in real time.	○	○	○	○	○
Position within one-revolution (1 pulse unit)	Cy1	pulse	The position within one-revolution is displayed in the encoder pulse unit. The values in excess of ±99999 can be counted. However, the counter shows only the lower five digits of the actual value because the servo amplifier display is five digits. When the servo motor rotates in the CCW direction, the value is added.	○	○	○	○	○
Position within one-revolution (1000 pulses unit)	Cy2	1000 pulses	The position within one-revolution is displayed by increments of 1000 pulses unit of the encoder. When the servo motor rotates in the CCW direction, the value is added.	○	○	○	○	○
ABS counter	LS	rev	The travel distance from the home position is displayed as multi-revolution counter value of the absolution position encoder in the absolution position detection system.	○	○	○	○	○
Load to motor inertia ratio	dC	Multiplier	The estimated ratio of the load inertia moment to the servo motor inertia moment is displayed.	○	○	○	○	○
Bus voltage	Pn	V	The voltage of main circuit converter (between P+ and N-) is displayed.	○	○	○	○	○
Internal temperature of encoder	Erh	°C	The internal temperature detected by the encoder is displayed. If the internal temperature of encoder cannot be obtained, such case as the linear servo motor or others, "9999" is displayed.	○	○	○	○	○
Settling time	St	ms	The settling time is displayed. When the settling time exceeds 1000 ms, "1000" is displayed.	○	○	○	○	○
Oscillation detection frequency	oF	Hz	The frequency at the time of oscillation detection is displayed.	○	○	○	○	○

Status display	Symbol	Unit	Description	Control mode *1			Operation mode *2	
				P	S	T	Semi closed	Fully closed
Number of tough drive operations	rd	times	The number of times the tough drive function has activated is displayed.	○	○	○	○	○
Unit power consumption 1 (increment of 1 W)	PC1	W	The unit power consumption by increment of 1 W is displayed. The positive value indicates power running, and negative value indicates regeneration. The values in excess of ±99999 can be counted. However, the counter shows only the lower five digits of the actual value because the servo amplifier display is five digits.	○	○	○	○	○
Unit power consumption 2 (increment of 1 kW)	PC2	kW	The unit power consumption by increment of 1 kW is displayed. The positive value indicates power running, and negative value indicates regeneration.	○	○	○	○	○
Unit total power consumption 1 (increment of 1 Wh)	rPC1	Wh	The unit total power consumption by increment of 1 Wh is displayed. The positive value is accumulated during power running, while negative value is accumulated during regeneration. The values in excess of ±99999 can be counted. However, the counter shows only the lower five digits of the actual value because the servo amplifier display is five digits.	○	○	○	○	○
Unit total power consumption 2 (increment of 100 kWh)	rPC2	100 kWh	The unit total power consumption by increment of 100 kWh is displayed. The positive value is accumulated during power running, while negative value is accumulated during regeneration.	○	○	○	○	○
Cumulative feedback pulses from load-side encoder *3	FC	pulse	The feedback pulses from the load-side encoder are counted and displayed. The values in excess of ±99999 can be counted. However, the counter shows only the lower five digits of the actual value because the servo amplifier display is five digits. Press the "SET" button to reset the display value to "0". The decimal points in the upper four digits are lit for a negative value.	○	○	○	×	○
Load-side encoder droop pulses *3	FE	pulse	Droop pulses in the deviation counter, which are the pulse differences between a load-side position and a command, are displayed. When the count exceeds ±99999, it starts from 0. The decimal points in the upper four digits are lit for a negative value.	○	○	○	×	○

Status display	Symbol	Unit	Description	Control mode *1			Operation mode *2	
				P	S	T	Semi closed	Fully closed
Load-side encoder information 1 (1 pulse unit) *3	FCY1	pulse	The Z-phase counter of the load-side encoder is displayed in the encoder pulse unit. For an incremental linear encoder, the Z-phase counter is displayed. The value is counted up from 0 based on the home position (reference mark). For absolute position linear encoder, the absolute position of encoder is displayed. When the count exceeds 99999, it starts from 0.	○	○	○	×	○
Load-side encoder information 1 (100000 pulses unit) *3	FCY2	100000 pulses	The Z-phase counter of the load-side encoder is displayed in 100000 pulses unit. For an incremental linear encoder, the Z-phase counter is displayed. The value is counted up from 0 based on the home position (reference mark). For absolute position linear encoder, the absolute position of encoder is displayed. When the count exceeds 99999, it starts from 0.	○	○	○	×	○
Load-side encoder information 2 *3	FLS	rev	If an incremental linear encoder is used as the load-side encoder, "0" is displayed. If an absolute position linear encoder is used as the load-side encoder, "0" is displayed. If a rotary encoder is used as the load-side encoder, the multi-revolution counter value of the encoder is displayed.	○	○	○	×	○
Motor-side encoder information 1 (1 pulse unit) *3	MCY1	pulse	The position within one revolution of the motor-side encoder is displayed in the encoder pulse unit. For an incremental linear encoder, the Z-phase counter is displayed. The value is counted up from 0 based on the home position (reference mark). For absolute position linear encoder, the absolute position of encoder is displayed. When the count exceeds 99999, it starts from 0.	○	○	○	×	○
Motor-side encoder information 1 (100000 pulses unit) *3	MCY2	100000 pulses	The position within one revolution of the motor-side encoder is displayed in 100000 pulses unit. For an incremental linear encoder, the Z-phase counter is displayed. The value is counted up from 0 based on the home position (reference mark). For absolute position linear encoder, the absolute position of encoder is displayed. When the count exceeds 99999, it starts from 0.	○	○	○	×	○

Status display	Symbol	Unit	Description	Control mode *1			Operation mode *2	
				P	S	T	Semi closed	Fully closed
Motor-side encoder information 2 *3	ML5	rev	If an incremental linear encoder is used as the motor-side encoder, "0" is displayed. If an absolute position linear encoder is used as the motor-side encoder, "0" is displayed. If a rotary encoder is used as the motor-side encoder, the multi-revolution counter value of the encoder is displayed.	○	○	○	×	○
Z-phase counter low	FCY1	pulse	The Z-phase counter is displayed in the encoder pulse unit. For an incremental linear encoder, the Z-phase counter is displayed. The value is counted up from 0 based on the home position (reference mark). For absolute position linear encoder, the absolute position of encoder is displayed. When the count exceeds 99999, it starts from 0. This is displayed only when the linear servo motor is used.	○	○	○	○	×
Z-phase counter high	FCY2	100000 pulses	The Z-phase counter is displayed by increments of 100000 pulses of the encoder. For an incremental linear encoder, the Z-phase counter is displayed. The value is counted up from 0 based on the home position (reference mark). For absolute position linear encoder, the absolute position of encoder is displayed. When the count exceeds 99999, it starts from 0. This is displayed only when the linear servo motor is used.	○	○	○	○	×
Electrical angle low	ECY1	pulse	The servo motor electrical angle is displayed. This is displayed only when the linear servo motor is used.	○	○	○	○	×
Electrical angle high	ECY2	100000 pulses	The servo motor electrical angle is displayed by increments of 100000 pulses. This is displayed only when the linear servo motor is used.	○	○	○	○	×

*1 P: Position control mode
S: Speed control mode
T: Torque control mode
*2 Semi closed: Semi closed loop control mode
Fully closed: Fully closed loop control mode
*3 Available on servo amplifiers with firmware version A5 or later.

Changing the status display screen

The status display on the servo amplifier at power-on can be changed with [Pr. PC36]. For each control mode, the status display in the initial status changes as follows.

Control mode	Displayed items
Position	Cumulative feedback pulses
Position/speed	Cumulative feedback pulses/servo motor speed
Speed	Servo motor speed
Speed/torque	Servo motor speed/analog torque command voltage
Torque	Analog torque command voltage
Torque/position	Analog torque command voltage/cumulative feedback pulses

Other status displays

Display	Status	Description
UPd	Updating	Indicates that a firmware update is in progress.
dEF	Initialization in progress	Indicates that initialization of settings such as servo parameters is in progress.

Diagnostic mode

Name		Display	Description
Sequence		rd-oF	Not ready Indicates that the servo amplifier is being initialized or an alarm has occurred.
		rd-on	Ready Indicates that initialization is completed, and the servo amplifier is in servo-on state and ready to operate.
Drive recorder enabled/disabled display		b-on	The drive recorder is enabled. When an alarm occurs in this state, the drive recorder operates, and records the status at the alarm occurrence.
		b-oF	The drive recorder is disabled. The drive recorder does not operate in the following conditions. • The graph function of MR Configurator2 is being used. • The machine analyzer function is being used. • [Pr. PF21] is set to "-1".
External I/O signal display		☞ Page 49 External I/O signal display	Indicates the on/off status of the external I/O signal. The upper segments correspond to the input signals, and the lower segments correspond to the output signals.
Output signal (DO) forced output		do-on	Allows digital output signal to be switched on/off forcibly. ☞ Page 50 Output signal (DO) forced output
Test operation mode	JOG operation	tEST1	The JOG operation can be performed without commands from an external controller. ☞ Page 51 JOG operation
	Positioning operation	tEST2	The positioning operation can be performed without commands from an external controller. MR Configurator2 is required to perform the positioning operation. ☞ Page 52 Positioning operation
	Motor-less operation	tEST3	Without connecting the servo motor, output signals can be provided, and the status display can be monitored for the input devices as if the servo motor is actually running. ☞ Page 52 Motor-less operation
	Machine analyzer operation	tEST4	Merely connecting a servo amplifier allows the resonance point of the mechanical system to be measured. MR Configurator2 is required to perform the machine analyzer operation. For details, refer to Help of MR Configurator2.
	For manufacturer adjustment	tEST5	This is for manufacturer adjustment.
	For manufacturer adjustment	tEST6	This is for manufacturer adjustment.
Firmware version lower		-A0	Indicates the version of the firmware.
Firmware version upper		-100	Indicates the system number of the firmware.

Name	Display	Description
Analog command input 1 automatic offset	H1 0	The analog command input 1 offset voltage can be adjusted automatically. VC (Analog speed command)/VLA (Analog speed limit) is set as the initial value. Zero-adjustment of the offset voltage is performed automatically when the offset voltage of the internal and external analog circuits of the servo amplifier causes the servo motor to operate slowly, even though VC (Analog speed command) or VLA (Analog speed limit) is set to 0 V. When using this function, enable it in the following procedure. When it is enabled, the value of [Pr. PC37] changes to the automatically adjusted offset voltage. **1.** Press "SET" once. **2.** Set the number in the first digit to 1 with "UP"/"DOWN". **3.** Press "SET". This function cannot be used if the input voltage of VC or VLA is -0.4 V or less, or +0.4 V or more. Even if the analog command input 1 automatic offset is performed and 0 V is inputted, the servo motor may not stop completely due to an internal error. To completely stop the servo motor, switch off ST1 or ST2 and stop.
Servo motor series ID	H2 0	Press the "SET" button to display the series ID of the servo motor currently connected. For the description of each display, refer to "Rotary servo motor ID codes" in the following manual. 📖Rotary Servo Motor User's Manual (For MR-J5)
Servo motor type ID	H3 0	Push "SET" to show the encoder ID of the servo motor currently connected. For the description of each display, refer to "Rotary servo motor ID codes" in the following manual. 📖Rotary Servo Motor User's Manual (For MR-J5)
Servo motor encoder ID	H4 0	Push "SET" to show the encoder ID of the servo motor currently connected. For the description of each display, refer to "Rotary servo motor ID codes" in the following manual. 📖Rotary Servo Motor User's Manual (For MR-J5)
For manufacturer adjustment	H5 0	This is for manufacturer adjustment.
For manufacturer adjustment	H6 0	This is for manufacturer adjustment.

Alarm mode

The current alarm, past alarm history, and servo parameter error are displayed. The lower 3 digits on the display indicate the alarm No. that has occurred or the servo parameter No. in error.

Name	Display	Description
Current alarm	A - - - . -	Indicates no occurrence of an alarm.
	A033.1 (Blinking)	Indicates the occurrence of [AL. 033.1 Main circuit voltage error]. Blinks at alarm occurrence.
Alarm history	AL.0 ↓ "SET" 050.1	Indicates that the last alarm is [AL. 050.1 Thermal overload error 1 during operation]. When an alarm is recorded to alarm history, the 2-digit decimal point is lit. Press "SET" to display the alarm No.
	AL.1 ↓ "SET" 033.1	Indicates the second last alarm is [AL. 033.1 Main circuit voltage error]. When an alarm is recorded to alarm history, the 2-digit decimal point is lit. Press "SET" to display the alarm No.
	...	...
	AL.F ↓ "SET" - - - . -	Indicates that there is no sixteenth alarm in the past. When no alarm history exists, the display is as shown on the left column.
Servo parameter error No.	E - -	Indicates no occurrence of [AL. 037 Parameter error].
	E. A12 (The decimal point of the five digit blinks.)	The setting value of [Pr. PA12 Reverse rotation torque limit] is incorrect.

Functions at alarm occurrence

- The current alarm is displayed in any mode.
- Even during alarm occurrence, the other screen can be viewed by pressing the button in the operation area. At this time, the decimal point in the fifth digit remains blinking.
- Remove the cause of the alarm and clear the cause of the alarm in any of the following methods.

Cycle the power.

Press "SET" on the current alarm display.

Turn on RES (Reset).

- Clear the alarm history with [Pr. PC18].
- Press "UP" or "DOWN" to move to the next history.

Parameter mode

Parameter mode transition

After selecting the corresponding servo parameter mode with "MODE" button, pressing "UP" or "DOWN" button changes the display as follows.

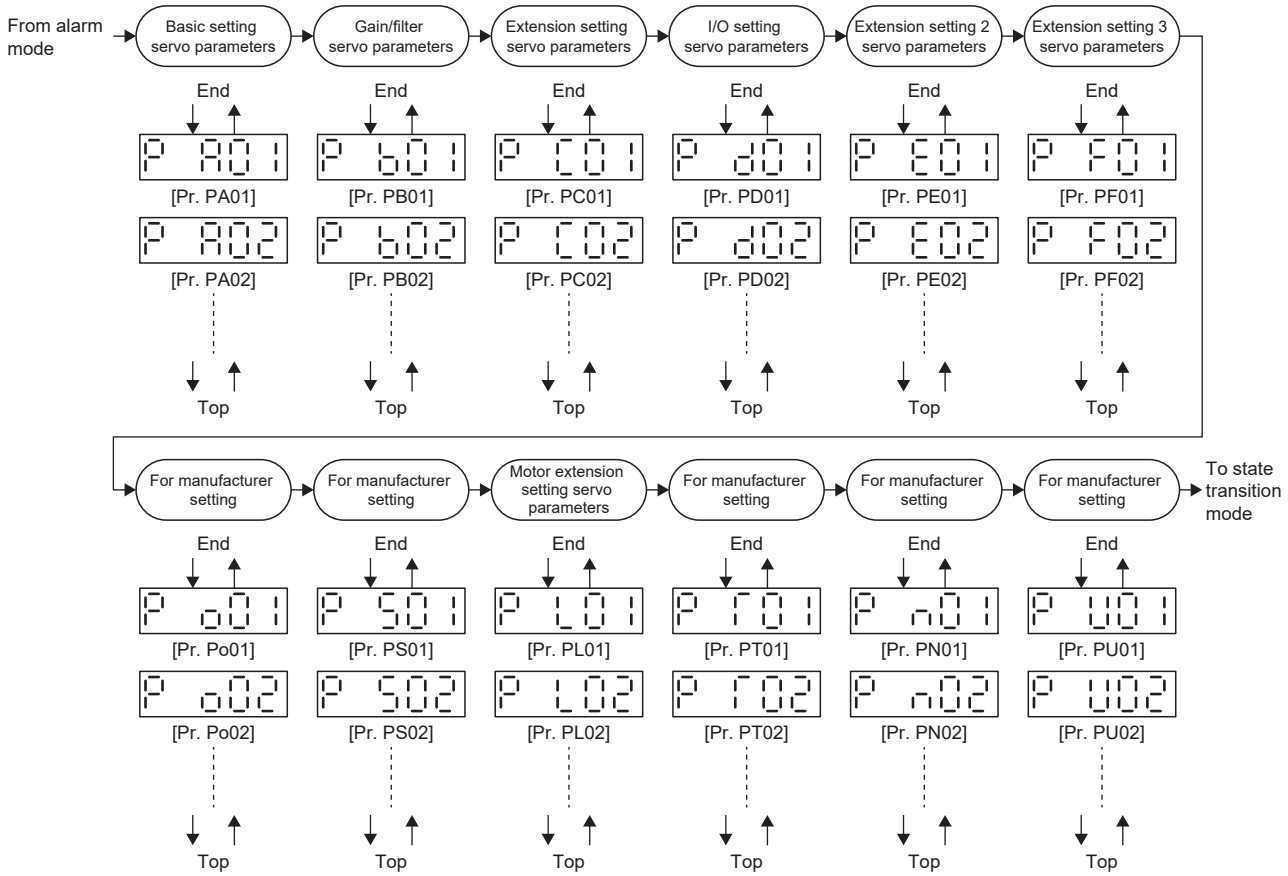

Operation method

■Servo parameter in hexadecimal

The operation method example is shown below when [Pr. PD03 Input device selection 1L] is set to "00022002". Press "MODE" to switch to the basic setting parameter screen.

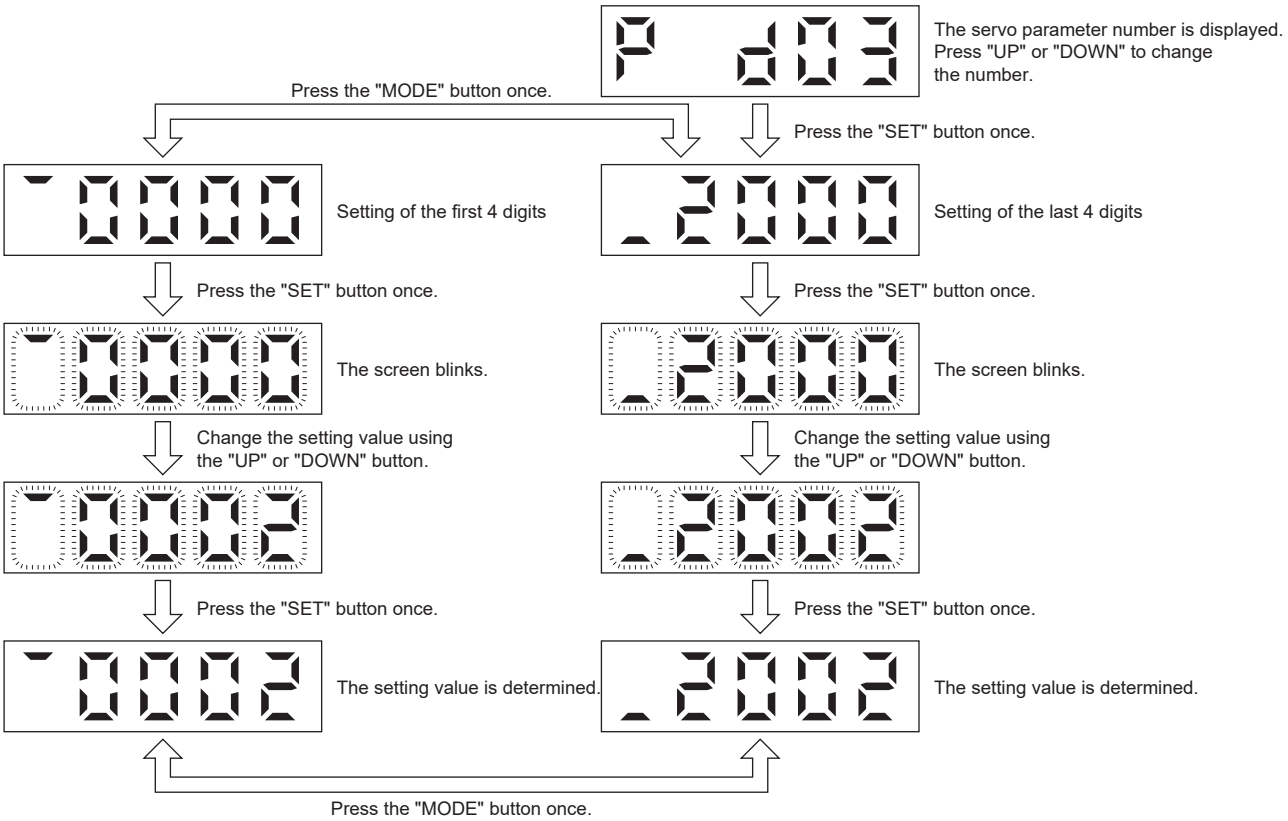

■Servo parameter in decimal

The following example gives the operation procedure to change [Pr. PA06 Electronic gear numerator] to "1234567890".

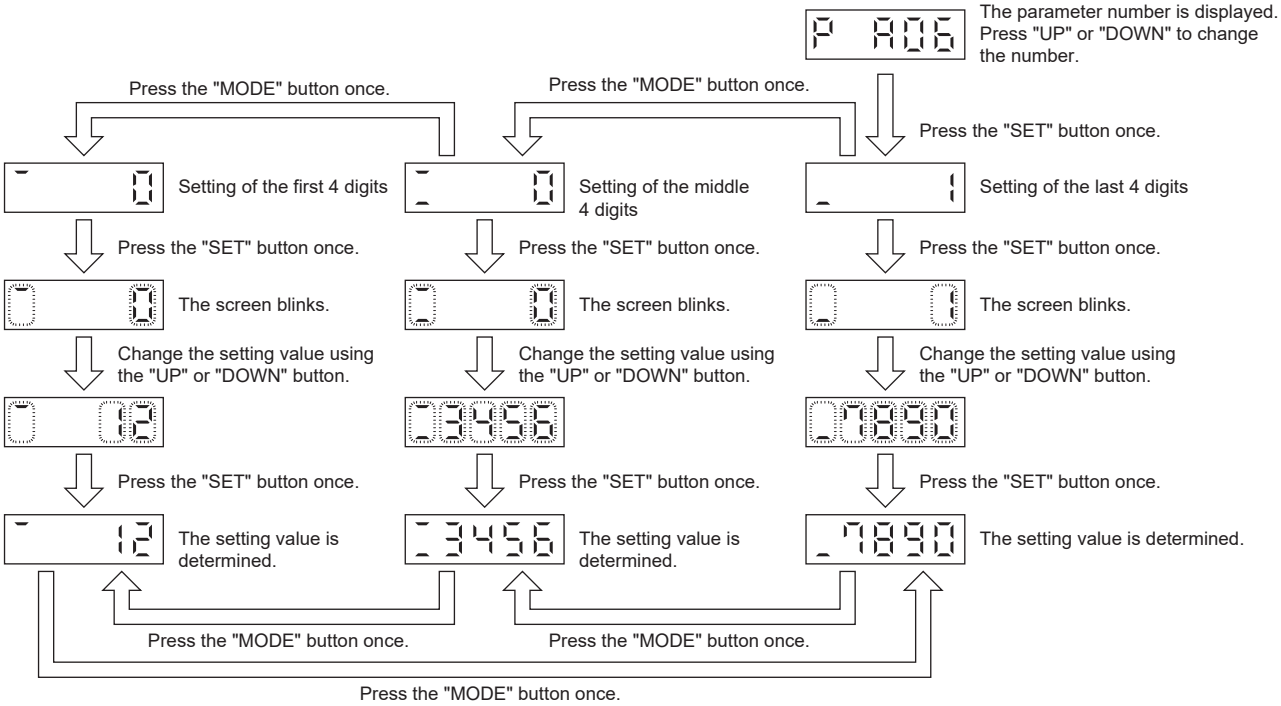

When the value of the servo parameter is negative, a minus is displayed in the first digit. The example for in the case of "-1234567890" is displayed.

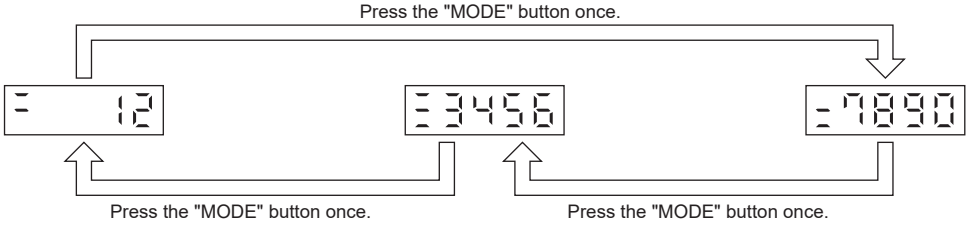

External I/O signal display

The on/off states of the digital I/O signals connected to the servo amplifier can be confirmed.

Operation

The display screen after power-on is shown. Press "MODE" to display the diagnostic screen.

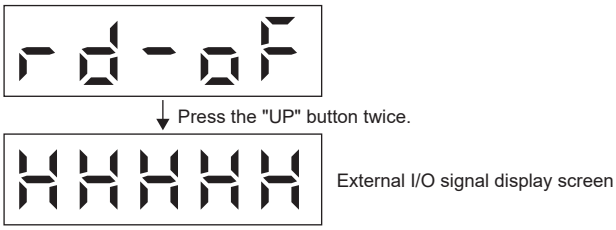

Display content

The 7-segment LED segments and CN3 connector pins correspond as shown below. The CN3-13 pin and CN3-14 pin can be used on the MR-J5-_A-RJ servo amplifiers.

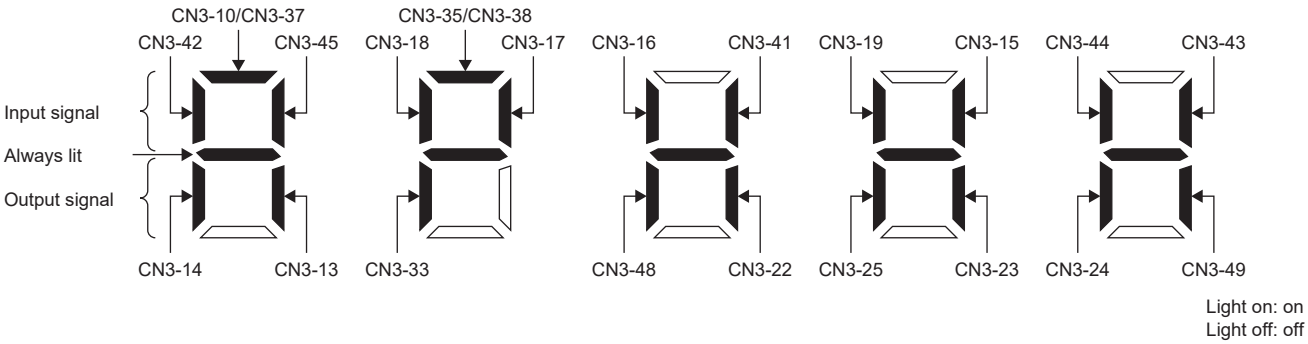

The LED segments corresponding to the pins are lit to indicate on, and are extinguished to indicate off. For pin signals in each control mode, refer to "Connectors and pin assignments" in the following manual.

📖MR-J5 User's Manual (Hardware)

Output signal (DO) forced output

This function forcibly switches the output signals on and off regardless of the servo status. Use this function for purposes such as checking output signal wiring. Execute this operation under the servo off status (SON (servo-on) has been turned off).

Precautions

- When the servo system is used with a vertical axis, turning on MBR (electromagnetic brake interlock) assigned to the CN3 connector pin releases the electromagnetic brake, causing the axis to drop. Take measures to prevent the axis from dropping on the machine side.

Operation

The display screen after power-on is shown. Press "MODE" to display the diagnostic screen.

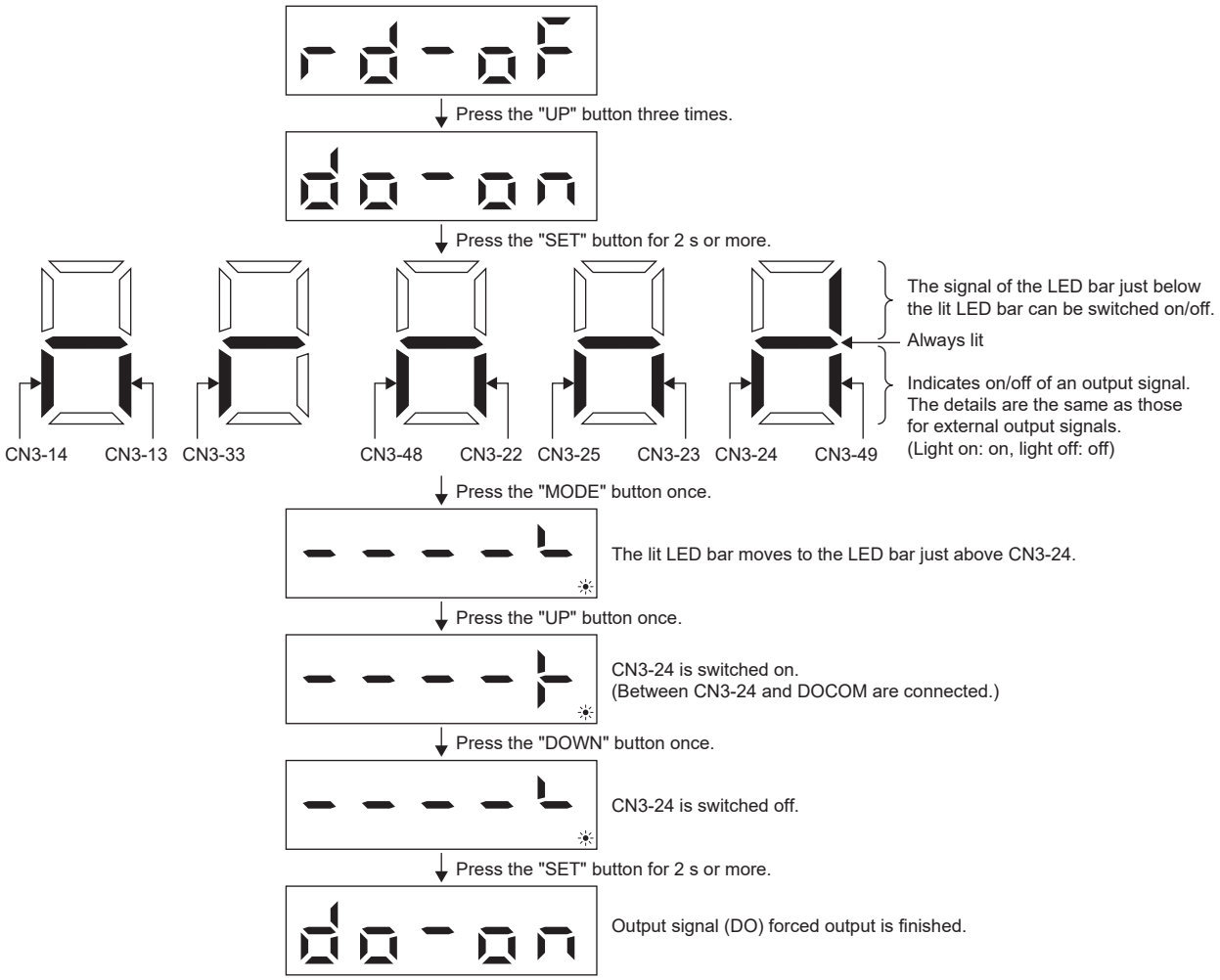

Test operation mode

Precautions

- The test operation mode is designed for checking servo operation. Do not use it for an actual operation.
- If the servo motor operates abnormally, stop the servo motor with EM2 (Forced stop 2).
- The test operation mode cannot be used in the absolute position detection system by DIO ([Pr. PA03.0 Absolute position detection system selection] set to "1" (enabled (absolute position detection system by DIO))). To perform the test operation, select the incremental system in [Pr. PA03].
- MR Configurator2 is required to perform the positioning operation.
- The test operation cannot be performed unless SON (servo-on) is turned off.

Mode switching

The display screen after power-on is shown. Select JOG operation or motor-less operation in the following procedure. Press "MODE" to display the diagnostic screen.

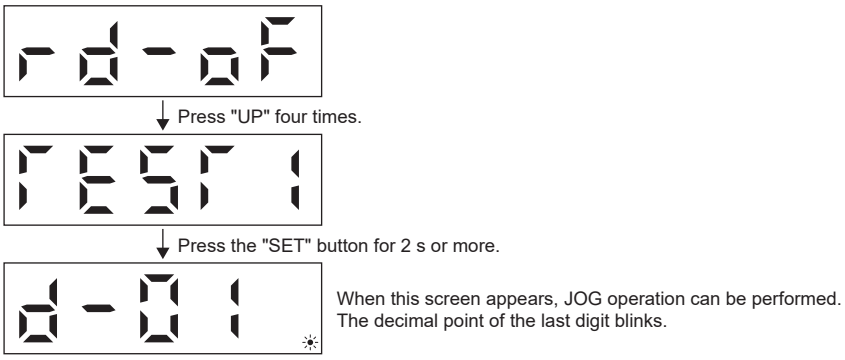

JOG operation

The JOG operation can be performed when there is no command from the controller. In the linear servo motor control mode, the JOG operation cannot be performed.

Precautions

- When performing the JOG operation, turn on EM2, LSP and LSN. LSP and LSN can be set to automatic on by setting [Pr. PD01.2] to "C".

■Operation/drive

A servo motor operates while holding down "UP" or "DOWN". The servo motor stops operating by releasing the button. Operation conditions can be changed by using MR Configurator2. Use the JOG operation screen of MR Configurator2.

☞ Page 68 JOG operation

When MR Configurator2 is not used to change operation conditions, operate a servo motor with on the following conditions.

Item	Setting value
Servo motor speed [r/min]	200
Acceleration/deceleration time constants [ms]	1000

Starting operation and stop of a servo motor can be done by the buttons. Operate it as follows.

Button	Description
UP	Press to start CCW rotation. Release to stop.
DOWN	Press to start CW rotation. Release to stop.

■Status display

Press "MODE" in the JOG operation-ready status to call the status display screen. When the JOG operation is performed by pressing "UP" or "DOWN", the servo status during the JOG operation is displayed. Every time "MODE" is pressed, the next status display screen appears. When one cycle of the screen display is complete, it returns to the JOG operation-ready status screen. Refer to the following for details of status display.

☞ Page 37 Status display

Note that the status display screen cannot be changed by "UP" or "DOWN" during the JOG operation.

■Termination of JOG operation

To end the JOG operation, shut the power off once, or press "MODE" to switch to the next screen, and then hold down "SET" for 2 s or longer.

Positioning operation

Positioning operation can be performed when there is no command from the controller. Operate the motor using the Positioning Mode screen of MR Configurator2. Refer to the following for details.

☞ Page 69 Positioning operation

The status display can be checked in the display section during positioning operation. Press "MODE" in the positioning operation-ready status to call the status display screen.

Motor-less operation

Without connecting a servo motor, output signals and the status display can be provided in response to the input devices as if the servo motor is actually running. This operation can be used to check the sequence of a controller or the like. Refer to the following for details.

☞ Page 71 Motor-less operation

4 STARTUP

Point

- MR-J5-_A_ servo amplifiers can be set with MR Configurator2 with software version 1.100E or later.
- This chapter explains how to start up the servo amplifier by using MR Configurator2 with software version 1.100E.
- Before starting operation, check each servo parameter. Depending on the machine, an unexpected operation may occur.

When using a linear servo motor, the terms below have the following meanings.

- Load to motor inertia ratio → Load to motor mass ratio
- Torque → Thrust

Servo parameter setting method

Point

- The USB communication may be disconnected by operations such as servo parameter settings and drive recorder readout, depending on the load on the servo amplifier. If this is the case, remove the USB cable, then connect it again.

MR Configurator2 is the software used for purposes such as servo parameter settings, graph measurement/display, and test operation. This chapter describes the startup procedure of the servo amplifier when the servo amplifier is connected to a personal computer which has MR Configurator2 installed. To learn more about using MR Configurator2, refer to Help in MR Configurator2.

1. Connect the servo amplifier and the personal computer with a USB cable. Turn on the servo amplifier control circuit power supply.

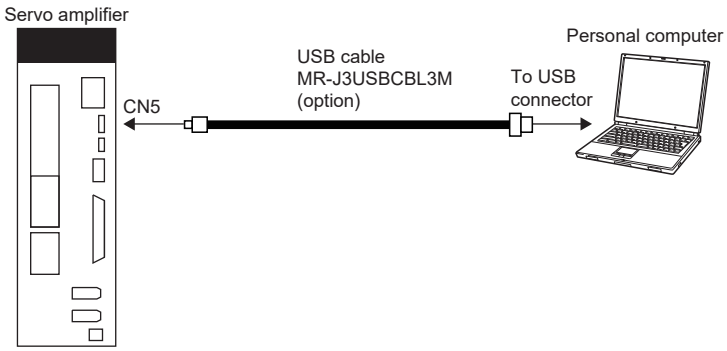

2. Start MR Configurator2 and create a new project. For the connection setting, select USB. Select a servo amplifier model and an operation mode.

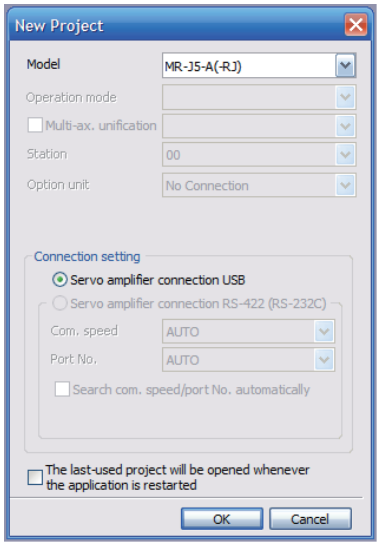

3. Selecting "Parameter" from the project tree opens the "Parameter Setting" screen.

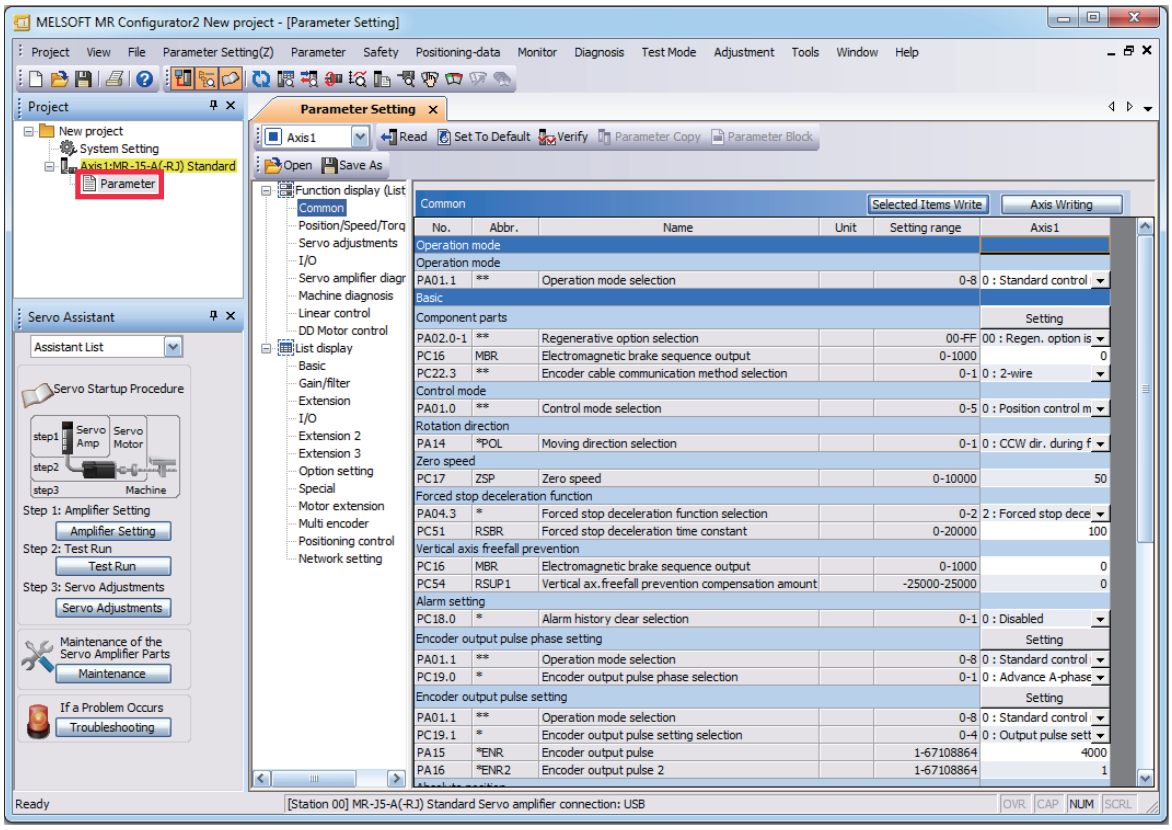

4. Select a group of servo parameters in the selection tree of the "Parameter Setting" window to display and configure the settings.

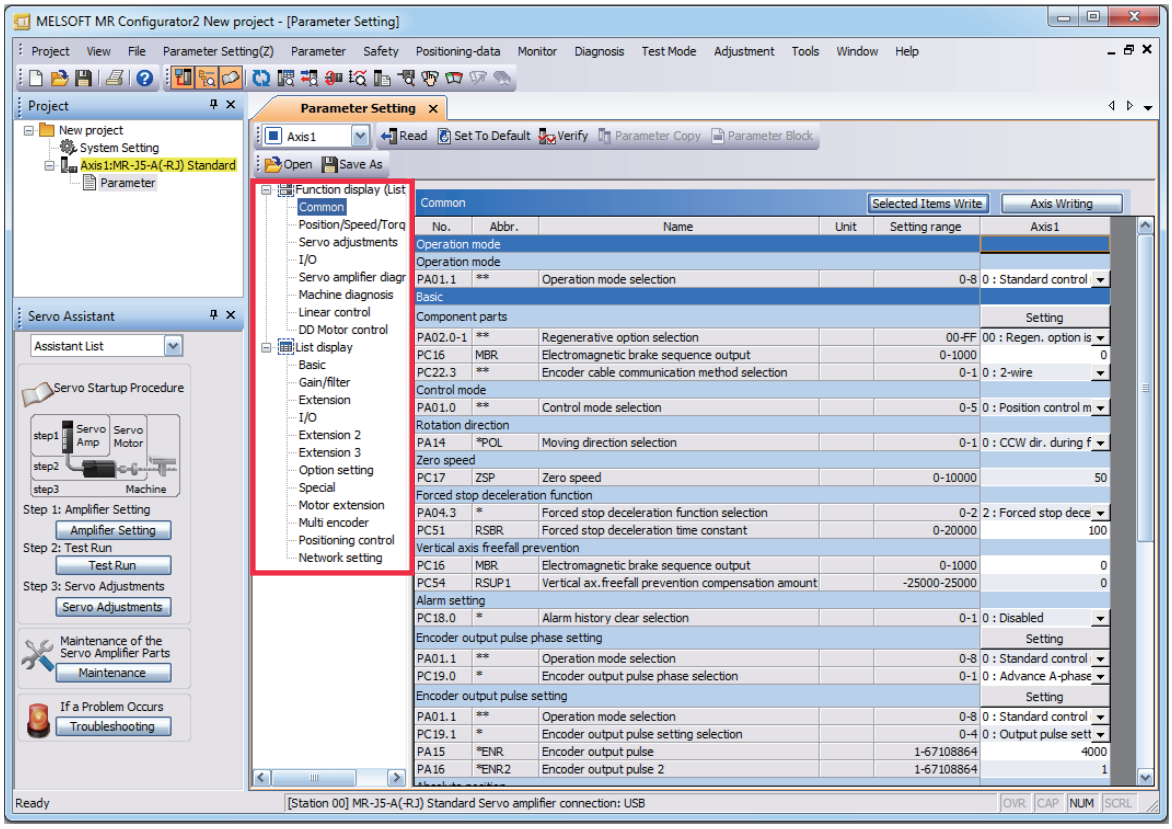

5. After changing the servo parameter, click "Selected Items Write" or "Axis Writing".

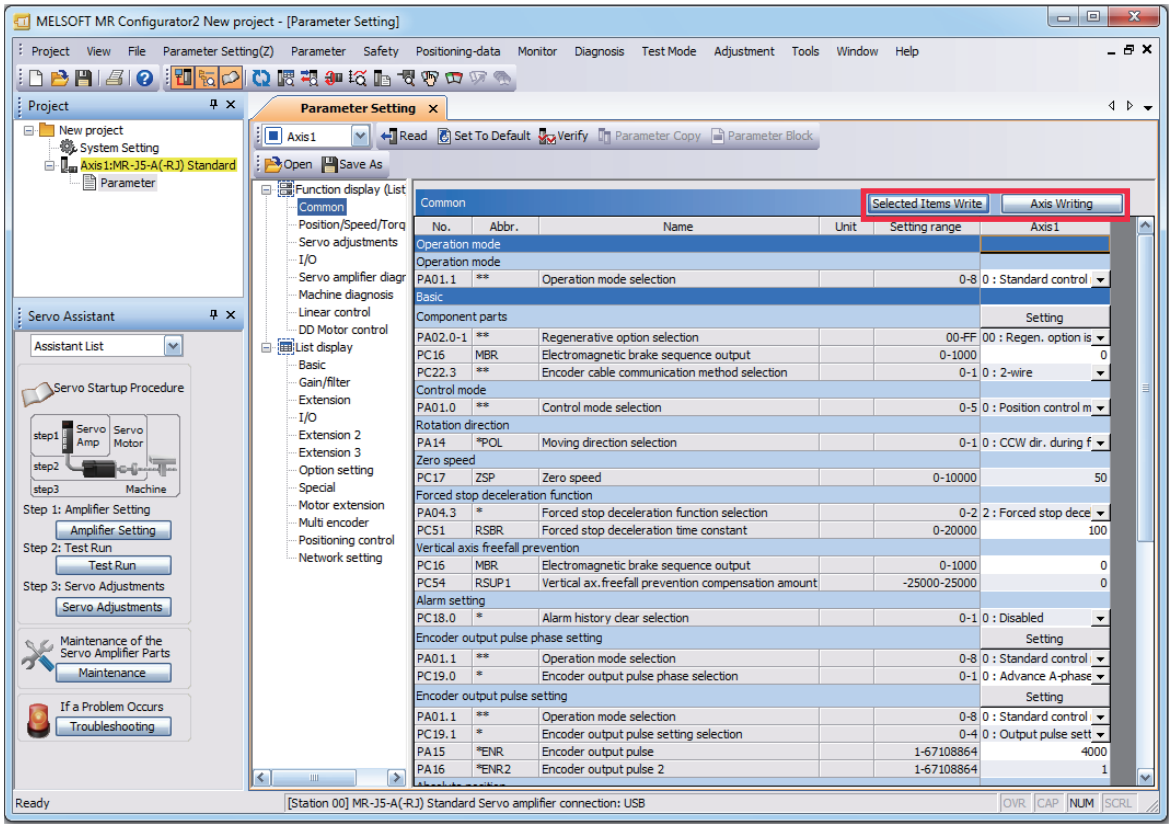

6. Abbreviated servo parameters prefixed with * and servo parameters marked with ** are enabled after the power is cycled or a software reset is performed. Click "Software Reset" in MR Configurator2 to perform the software reset.

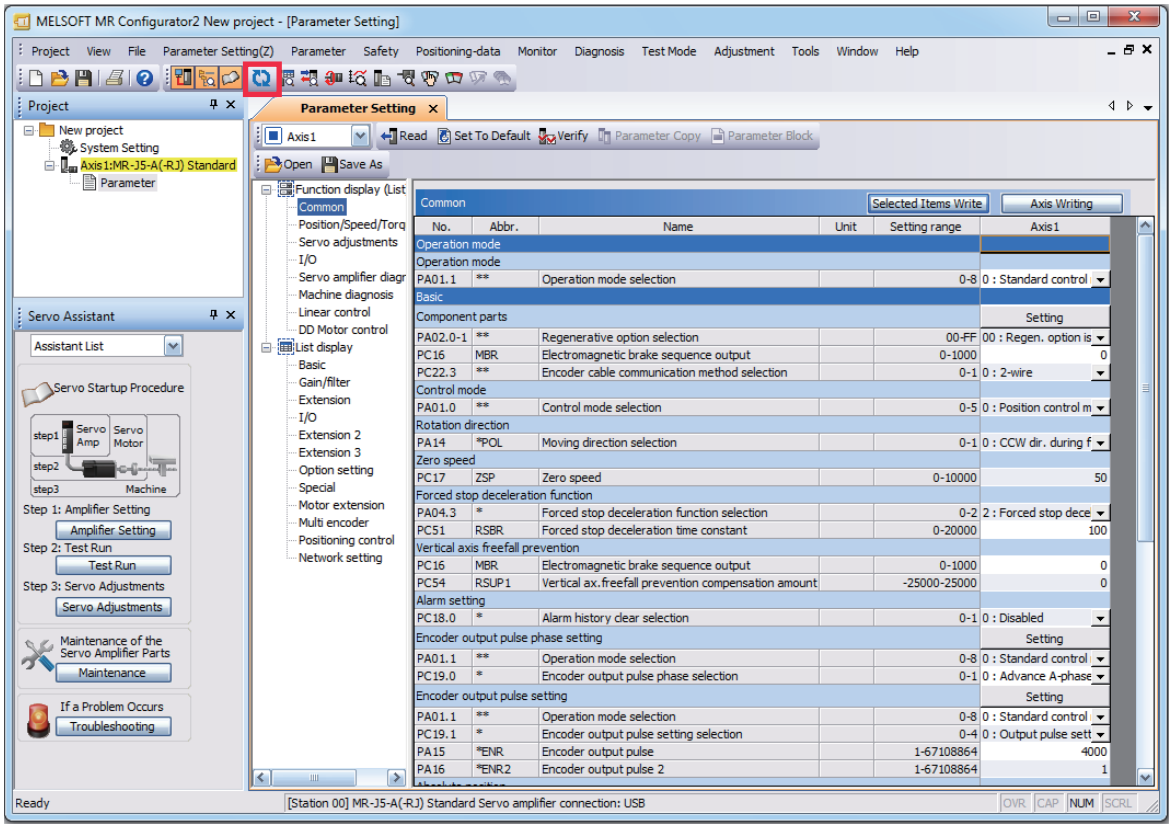

4.1 Turning on servo amplifier for the first time

Point

- For the controller settings, refer to the relevant controller manual.
- For the gain adjustment, refer to the following manual.

MR-J5 User's Manual (Adjustment)

When turning on the servo amplifier for the first time, follow the steps below.

Procedure	Description	Reference
1. Installation and wiring	Install and wire the servo amplifier and servo motor.	MR-J5 User's Manual (Hardware)
2. Test operation of the servo motor alone in test operation mode	With the servo motor disconnected from the machine, operate the servo motor at the lowest speed possible, and check whether the servo motor operates correctly.	Page 58 Test operation of the servo motor alone in test operation mode
3. Equipment configuration setting	Set each servo parameter according to the equipment configuration.	Page 59 Equipment configuration setting
4. Controller-related setting	Perform necessary settings according to commands from the controller.	Page 59 Controller-related setting
5. Operation by controller command	Operate the servo motor at the lowest speed possible by giving commands to the servo amplifier from the controller, and check whether the servo motor operates correctly.	Page 60 Operation by controller command
6. Actual operation	—	—

Test operation of the servo motor alone in test operation mode

Point

- If the servo motor operates in an unintended manner, stop the servo motor with EM2 (Forced stop 2).

Check that the servo amplifier and servo motor operate normally. With the servo motor disconnected from the machine, use the test operation mode and check whether the servo motor operates correctly. This section describes how to check the servo motor operation in the JOG operation. The test operation also includes the positioning operation and program operation.

☞ Page 67 Test operation

In the linear servo motor control mode, the JOG operation cannot be performed. Check the linear servo motor operation status by using the positioning operation or by other means.

☞ Page 68 Motor driving by test operation

1. Turn off the power.

2. Open the "JOG Mode" screen of MR Configurator2.

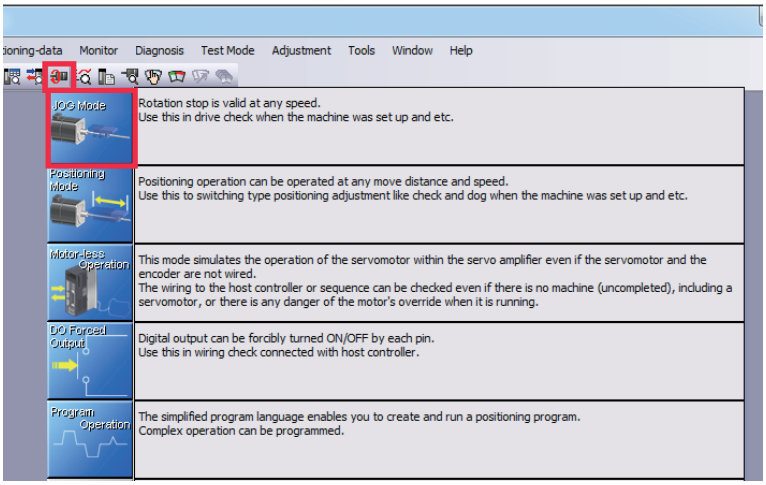

3. To operate the servo motor, input the motor speed and acceleration/deceleration time constants, then click "Forward CCW" or "Reverse CW". The servo motor operates only while the button is being clicked. Give a low speed command at first and check the operation status.

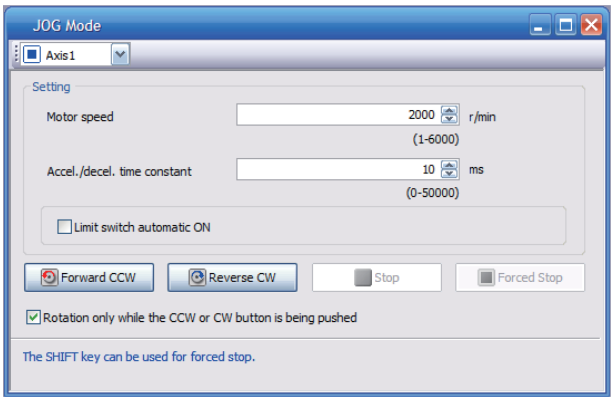

4. After the test operation is completed, turn off the power.

Equipment configuration setting

Set the servo parameters for each function according to the equipment configuration. For details, refer to the following manual.

MR-J5 User's Manual (Function)

Item	Description
Rotation/travel direction selection	To change the rotation/travel direction (POL), change the servo parameter.
Stroke limit function	Limit switches can be used to limit travel intervals of the servo motor. Configure the settings according to the connection method of the limit switch.
In-position setting	Positioning completion status can be checked with in-position. Set this as necessary.
Forced stop deceleration function	Stops the servo motor at EM2 (Forced stop 2) off. Perform settings such as the deceleration time constant.
Vertical axis freefall prevention function	For vertical axes, this function pulls up the shaft slightly. When using a servo motor with an electromagnetic brake for a vertical axis, perform settings as required.

Controller-related setting

Set the servo parameters according to the control mode to be used from the controller.

MR-J5 User's Manual (Function)

Set each servo parameter that is necessary for the operation using controller commands.

Item	Description	Reference
Command unit selection function	The unit of torque command can be selected from the controller.	Refer to "Command unit selection function" in the following manual. MR-J5 User's Manual (Function)
Electronic gear setting	Perform the settings related to the controller command unit and amplifier command unit.	Refer to "Electronic gear function" in the following manual. MR-J5 User's Manual (Function)

Operation by controller command

Perform operation for each operation mode in accordance with the instructions shown in this chapter.

Position control mode

■Instructions for power-on

Turn on the power using the following procedure. Always follow this procedure when turning on the power. Also refer to the following instructions on power-on.

☞ Page 64 Instructions for power-on

1. Turn off SON (Servo-on).
2. Make sure that a command pulse train is not inputted.
3. Turn on the main circuit power supply and control circuit power supply.

Data is displayed 2 s after "C" (Cumulative feedback pulses) is displayed.

■Operation by command

1. Turn on EM2 (Forced stop 2) and SON (Servo-on). When the servo amplifier is in servo-on status, RD (Ready) turns on.
2. Turn on LSP (Forward rotation stroke end) and LSN (Reverse rotation stroke end).
3. When a pulse train is inputted from the controller, the servo motor starts operating. Give a low speed command at first to check the servo motor operations such as the rotation direction. If the servo motor does not operate in the intended direction, review the input signal and rotation/travel direction selection (POL).
4. Check the operation status.

☞ Page 63 Checking the operation status

■Instructions on power shut-off

1. Make sure that a command pulse train is not inputted.
2. Turn off SON (Servo-on).
3. Shut off the main circuit power supply and control circuit power supply.

Speed control mode

■Instructions for power-on

Turn on the power using the following procedure. Always follow this procedure when turning on the power. Also refer to the following instructions on power-on.

☞ Page 64 Instructions for power-on

1. Turn off SON (Servo-on).
2. Make sure that ST1 (Forward rotation start) and ST2 (Reverse rotation start) are off.
3. Turn on the main circuit power supply and control circuit power supply.

Data is displayed 2 s after "r" (Servo motor speed) is displayed.

■Operation by command

1. Turn on EM2 (Forced stop 2) and SON (Servo-on). When the servo amplifier is in servo-on status, RD (Ready) turns on.
2. Turn on LSP (Forward rotation stroke end) and LSN (Reverse rotation stroke end).
3. When VC (Analog speed command) is inputted from the controller and ST1 (Forward rotation start) or ST2 (Reverse rotation start) is turned on, the servo motor starts operating. Give a low speed command at first to check the servo motor operations such as the rotation direction. If the servo motor does not operate in the intended direction, check the input signal.
4. Check the operation status.

☞ Page 63 Checking the operation status

■Instructions on power shut-off

1. Turn off ST1 (Forward rotation start) and ST2 (Reverse rotation start).
2. Turn off SON (Servo-on).
3. Shut off the main circuit power supply and control circuit power supply.

Torque control mode

■Instructions for power-on

Turn on the power using the following procedure. Always follow this procedure when turning on the power. Also refer to the following instructions on power-on.

☞ Page 64 Instructions for power-on

1. Turn off SON (Servo-on).
2. Make sure that RS1 (Forward rotation selection) and RS2 (Reverse rotation selection) are off.
3. Turn on the main circuit power supply and control circuit power supply.

Data is displayed 2 s after "U" (Analog torque command) is displayed.

■Operation by command

1. Turn on SON (Servo-on). When the servo amplifier is in servo-on status, RD (Ready) turns on.
2. When TC (Analog speed command) is inputted from the controller and RS1 (Forward rotation start) or RS2 (Reverse rotation start) is turned on, the servo motor starts operating. Give a low torque command at first to check the servo motor operations such as the rotation direction. If the servo motor does not operate in the intended direction, check the input signal.
3. Check the operation status.

☞ Page 63 Checking the operation status

■Instructions on power shut-off

1. Turn off RS1 (Forward rotation selection) or RS2 (Reverse rotation selection).
2. Turn off SON (Servo-on).
3. Shut off the main circuit power supply and control circuit power supply.

Checking the operation status

After the operation by controller command, confirm that the servo motor can be operated properly in accordance with the following procedure.

1. Display the Display All window in MR Configurator2. Confirm that there is no error in the items such as servo motor speed and load ratio.

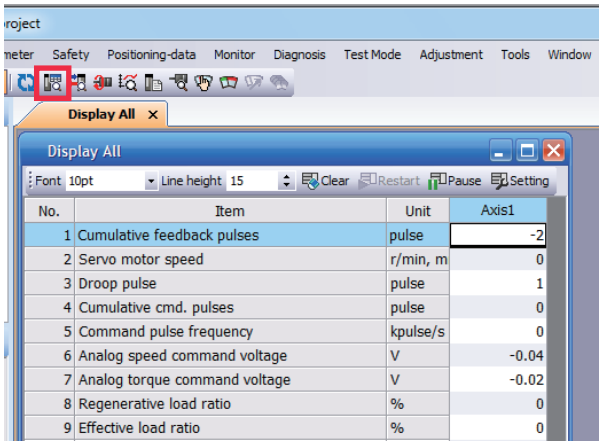

2. Display the I/O Monitor window. Confirm that there is no error in the I/O signal.

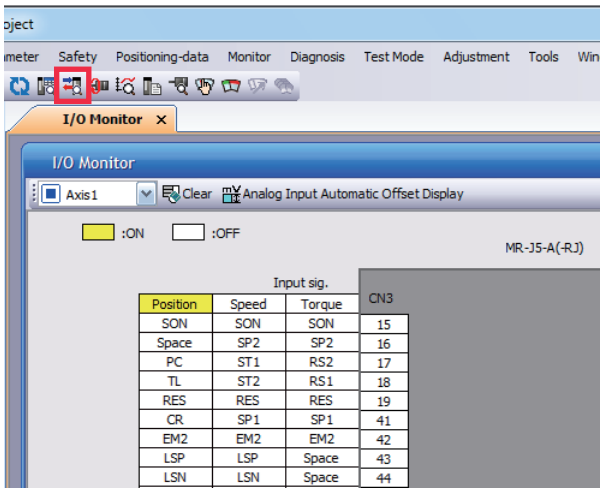

4.2 Instructions on startup

Instructions for power-on

- When the absolute position detection system is used in a rotary servo motor, [AL. 025 Absolute position erased] occurs the first time that the power is turned on and the servo motor cannot be changed to servo-on status. Shut off the power once, then cycle the power to deactivate the alarm.
- If the power is turned on while the servo motor is being rotated by an external force, an alarm may occur. Make sure that the servo motor is not operating before turning on the power. In addition, refer to the manual for the servo motor or encoder being used.

Stop

If any of the following situations occur, the servo amplifier suspends and stops the operation of the servo motor.

Operation/command	Stopping condition
Alarm occurrence	The servo motor decelerates to a stop. There are also alarms that activate and stop the dynamic brake. For details of alarms, refer to the following manual. 📖MR-J5 User's Manual (Troubleshooting)
EM2 (Forced stop 2) off	The servo motor decelerates to a stop. [AL. 0E6 Servo forced stop warning] occurs. In the torque mode, EM2 functions the same as EM1.
STO (STO1 and STO2) off	The base circuit is shut off and the dynamic brake operates to stop the servo motor.
Limit switch off	When LSP (Forward rotation stroke end) or LSN (Reverse rotation stroke end) is turned off, the servo motor comes to a quick stop and activates the servo-lock. Operation in the opposite direction is possible.

4.3 Troubleshooting at startup

Problems that may occur at startup and the corresponding countermeasures are shown below.

Troubleshooting

If an alarm has occurred, refer to the following and remove the cause.

📖MR-J5 User's Manual (Troubleshooting)

Additionally, investigate the cause by using MR Configurator2. Refer to the following for details.

☞ Page 66 Investigation by using MR Configurator2.

No.	Startup sequence	Fault	Investigation	Possible cause	Reference
1	Power-on	5-digit, 7-segment LED is not lit. 5-digit, 7-segment LED blinks.	The problem is not solved even if the CN2 and CN3 connectors are disconnected.	1. Power supply voltage failure. 2. The servo amplifier is malfunctioning.	—
			The problem is solved when the CN2 connector is disconnected.	1. The power supply of encoder cabling is shorted. 2. The encoder is malfunctioning.	
			The problem is solved when the CN3 connector is disconnected.	The power supply of the CN3 cabling is shorted.	
2	SON (Servo-on) on	The servo motor shaft is not servo-locked. (The servo motor shaft is free.)	1. Check the display to see if the servo amplifier is ready to operate. 2. Check the external I/O signal display to see if SON (Servo-on) is on.	1. SON (Servo-on) is not switched on. (The wiring is incorrect.) 2. 24 V DC power is not supplied to DICOM.	☞ Page 49 External I/O signal display

No.	Startup sequence	Fault	Investigation	Possible cause	Reference
3	Operation of the servo motor alone by command (Position control mode)	The servo motor does not operate.	Check the cumulative command pulses on the status display.	1. The wiring is incorrect. • For the open collector pulse train input, 24 V DC power is not supplied to OPC. • LSP and LSN are not on. 2. A pulse is not inputted from the controller.	☞ Page 37 Status display
				The setting in [Pr. PA13] is incorrect.	
		The servo motor operates in the opposite direction.	Check the cumulative command pulses on the status display.	1. The wiring to the controller is incorrect. 2. The setting in [Pr. PA14] is incorrect.	
4	Operation of the servo motor alone by command (Speed control mode)	The servo motor does not operate.	Check the input voltage of VC (Analog speed command) on the status display.	The analog speed command is 0 V.	
			Check the on/off status of input signal with the external I/O signal display.	LSP, LSN, ST1, and ST2 are off.	☞ Page 49 External I/O signal display
			Check [Pr. PC05 Internal speed 1] to [Pr. PC11 Internal speed 7].	The setting is "0".	Refer to "Speed control mode (S)" in the following manual. 📖MR-J5 User's Manual (Function)
			Check [Pr. PA11 Forward rotation torque limit] and [Pr. PA12 Reverse rotation torque limit].	The torque limit level is too low against the load torque.	
			When TLA (Analog torque limit) is usable, check the input voltage on the status display.	The torque limit level is too low against the load torque.	
5	Operation of the servo motor alone by command (Torque control mode)	The servo motor does not operate.	Check the input voltage of TC (Analog torque command) on the status display.	The analog torque command is 0 V.	Refer to "Torque control mode (T)" in the following manual. 📖MR-J5 User's Manual (Function)
			Check the on/off status of input signal with the external I/O signal display.	RS1 and RS2 are off.	
			Check [Pr. PC05 Internal speed 1] to [Pr. PC11 Internal speed 7].	The setting is "0".	
			Check the value of [Pr. PC13 Analog torque command maximum output]	The torque command level is too low against the load torque.	
			Check [Pr. PA11 Forward rotation torque limit] and [Pr. PA12 Reverse rotation torque limit].	The setting is "0".	
6	Gain adjustment	Ripples (speed fluctuations) are large at low speed.	Follow the procedure shown below when adjusting the gain. 1. Improve the auto tuning responsiveness. 2. Repeat acceleration/deceleration three times or more to complete the auto tuning.	Faulty gain adjustment.	📖MR-J5 User's Manual (Adjustment)
		Large load inertia moment causes the servo motor shaft to oscillate side to side.	If the servo motor can be run safely, repeat acceleration/deceleration three times or more to complete the auto tuning.	Faulty gain adjustment.	
7	Actual operation	Position mismatch occurs	Confirm the cumulative command pulses, cumulative feedback pulses, and actual servo motor position.	Pulses are miscounted due to noise and other factors.	☞ Page 66 Investigating the cause of a position mismatch

Investigating the cause of a position mismatch

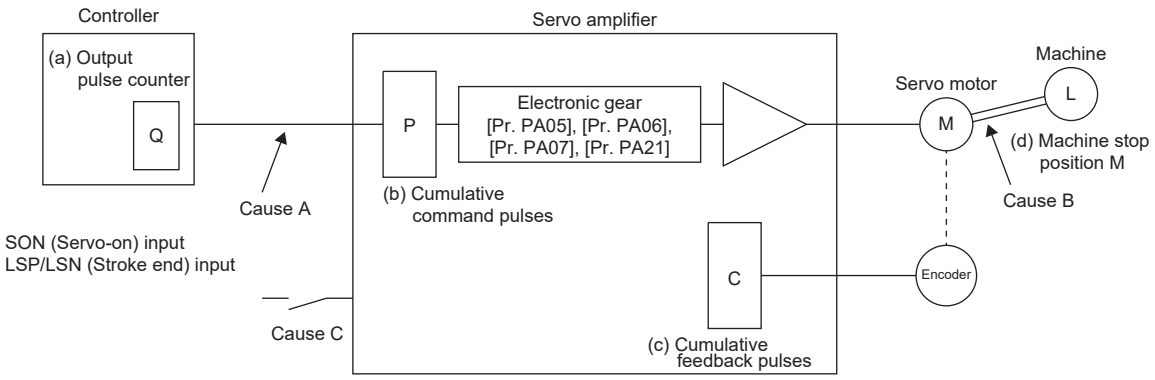

If a position mismatch occurs, check (a) output pulse counter Q, (b) cumulative command pulse P, (c) cumulative feedback pulse C, and (d) machine stop position M in the above diagram. In addition, causes A, B, and C indicate the causes of the position mismatch. For example, Cause A indicates that noise had entered the wiring between the controller and servo amplifier, causing the command input pulses to be miscounted.

In a normal status without the position mismatch, the following relationships are established.

- Q = P (Output counter = Cumulative command pulses)
- When [Pr. PA21.3] is set to "0"

$$P \cdot \frac{\text{CMX [Pr. PA06]}}{\text{CDV [Pr. PA07]}} = C \text{ (Cumulative command pulses × Electronic gear = Cumulative feedback pulses)}$$

- When [Pr. PA21.3] is set to "1"

$$P \cdot \frac{67108864}{\text{FBP [Pr. PA05]}} = C$$

- When [Pr. PA21.3] is set to "4"

$$P \cdot \frac{\text{CMX [Pr. PA06]}}{\text{CDV [Pr. PA07]}} \times 16 = C$$

- C • Δℓ = M (Cumulative feedback pulses × Travel distance per pulse = Machine position)

Check the position mismatch in the following order.

- When Q ≠ P

Noise entered the pulse train signal wiring between the controller and servo amplifier, causing command input pulses to be miscounted. (Cause A)

Check the following items and take the following measures.

Check how the shielding is done.

Change the open collector type to the differential line driver type.

Wire separately from the strong electric circuit.

Install a data line filter. (📖MR-J5 User's Manual (Hardware))

Change the setting of [Pr. PA13 Command pulse input form].

- When $P \cdot \frac{CMX}{CDV} \neq C$

During operation, SON (Servo-on), LSP (Forward rotation stroke end), or LSN (Reverse rotation stroke end) was switched off, or CR (Clear) or RES (Reset) was switched on. (Cause C)

- When C • Δℓ ≠ M

Mechanical slippage occurred between the servo motor and machine. (Cause B)

Investigation by using MR Configurator2.

The reason that the servo motor does not rotate can be investigated via MR Configurator2.

The cause that the servo motor fails to rotate is acquired from the servo amplifier of the target axis, and displayed on "No Motor Rotation". The window will remain blank when no cause exists. "- - - -" is displayed when off-line or the cause cannot be acquired.

4.4 Duplicate setting

Servo amplifier parameters for which setting has been completed can be copied to another servo amplifier. Use this function when replacing the servo amplifier of equipment with another servo amplifier during operation, and when starting up multiple devices with the same configuration.

Restrictions

■The following data is not duplicated. Set them as required after the duplication.

Item	Description
Machine service life diagnosis	Machine service life diagnosis information may not be duplicated. Refer to "Machine diagnosis" in the following manual, and perform required settings. 📖MR-J5 User's Manual (Function)

■The following data is not duplicated.

- Alarm history data
- Drive recorder data

Duplication using MR Configurator2

1. The data set in MR Configurator2 can be saved as a project.
2. To copy the project to a different servo amplifier, open the project and then connect the servo amplifier and a personal computer via a USB cable. Turn on the servo amplifier control circuit power supply.
3. Write the required data in MR Configurator2. After the writing is completed, cycle the power or perform a software reset as necessary.

4.5 Test operation

Using the test operation function enables the machine operation to be checked before the actual operation. With a personal computer and MR Configurator2, operations such as the JOG operation, positioning operation, output signal forced output, and program operation can be performed.

Precautions

- The test operation mode is designed for checking servo operation. This mode is not for checking machine operation. Do not use this mode with the machine. Use this mode only with the servo motor.

Execution method

Test operation mode is enabled by MR Configurator2. To set to the normal operation mode again after executing the test operation mode, cycle the power or perform a software reset.

- The test operation mode cannot be used in the absolute position detection system by DIO ([Pr. PA03.0 Absolute position detection system selection] set to "1" (enabled (absolute position detection system by DIO))).
- MR Configurator2 is required to perform the positioning operation.
- The test operation cannot be performed unless SON (servo-on) is turned off.
- Perform the test operation after the forced stop has been released. For details of the forced stop, refer to "Forced stop deceleration function" in the following manual.

📖MR-J5 User's Manual (Function)

Motor driving by test operation

JOG operation

The JOG operation can be performed when there is no command from the controller. The motor can be operated at the specified speed. Operate the motor using the JOG Mode screen of MR Configurator2.

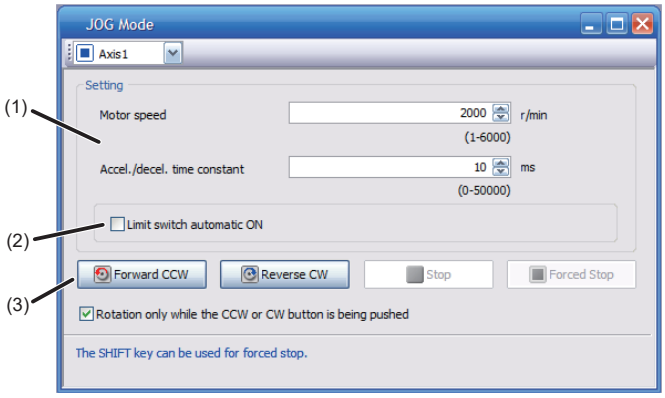

■Motor operation setting (1)

Set the motor speed and acceleration/deceleration time constants for JOG operation. When changing the speed to the permissible speed, set the speed in [Pr. PA28.4 Speed range limit selection].

■Limit switch automatic ON (2)

JOG operation can be performed when the limit switch is not connected. Be sure to avoid causing a collision while performing the operation.

■Operation (3)

The servo motor can be started, paused, stopped, or forcibly stopped. Clicking "Forward CCW" or "Reverse CW" starts the operation.

When "Rotation only while the CCW or CW button is being pushed" is not selected, clicking "Forward CCW" or "Reverse CW" will perform operation until "Stop" or "Forced Stop" is clicked.

Positioning operation

Positioning operation can be performed without the controller. Operate the motor using the Positioning Mode screen of MR Configurator2.

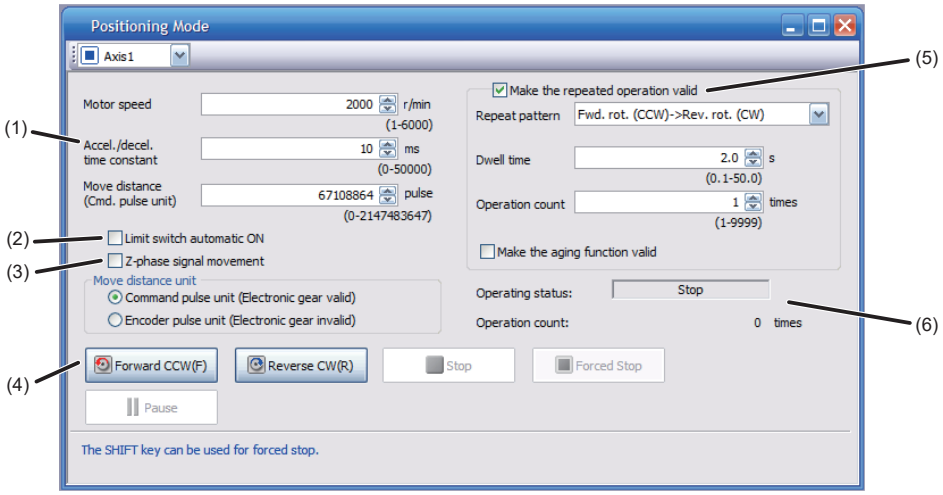

■Motor operation setting (1)

Set the motor speed, acceleration/deceleration time constants, and travel distance in the positioning operation mode. When changing the speed to the permissible speed, set the speed in [Pr. PA28.4 Speed range limit selection].

■Limit switch (2)

Select "Limit switch automatic ON" to perform the positioning operation when the limit switch is not connected. Be sure to avoid causing a collision while performing the operation.

■Move until Z-phase signal (3)

When "Z-phase signal movement" is selected, the servo motor moves until the first Z-phase signal after positioning operation.

■Operation (4)

The servo motor can be started (CCW/CW), paused, stopped, or forcibly stopped. Clicking "Operation Start" starts the operation in the specified operation condition.

■Repeat operation (5)

Selecting "Make the repeated operation valid" enables the repeat operation. Selecting "Make the aging function valid" enables the continuous operation until clicking "Stop" or "Forced Stop". Set the repeat pattern, the dwell time, and the number of operations.

■Operation status (6)

The operation status during the repeat operation and the number of operations are displayed.

Program operation

Positioning operation using multiple operation patterns can be performed without a controller. Operate the motor using the Program Operation screen of MR Configurator2. For details, refer to Help of MR Configurator2.

1. Open the Program Operation screen of MR Configurator2.

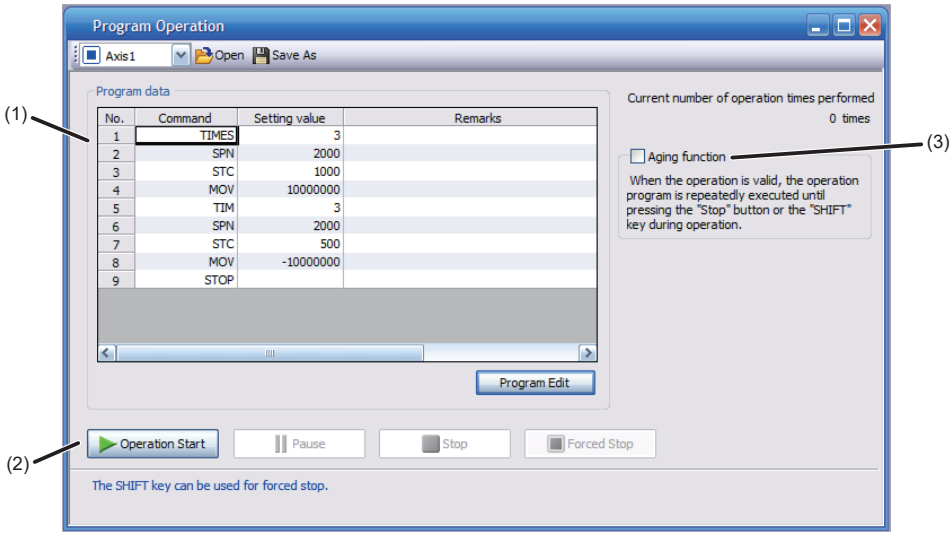

No.	Item	Screen operation
(1)	Program display	Displays the program. To edit the display item, click "Program Edit".
(2)	Operation	The servo motor can be started (CCW/CW), paused, stopped, or forcibly stopped. Clicking "Operation Start" starts the operation.
(3)	Repeat execution	Displays the number of execution times. Selecting "Aging function" enables the repeated operation of the operation program.

2. Clicking "Program Edit" in the program operation screen opens the Program Edit screen.

Input the program and click "OK". For program commands, refer to Help of MR Configurator2.

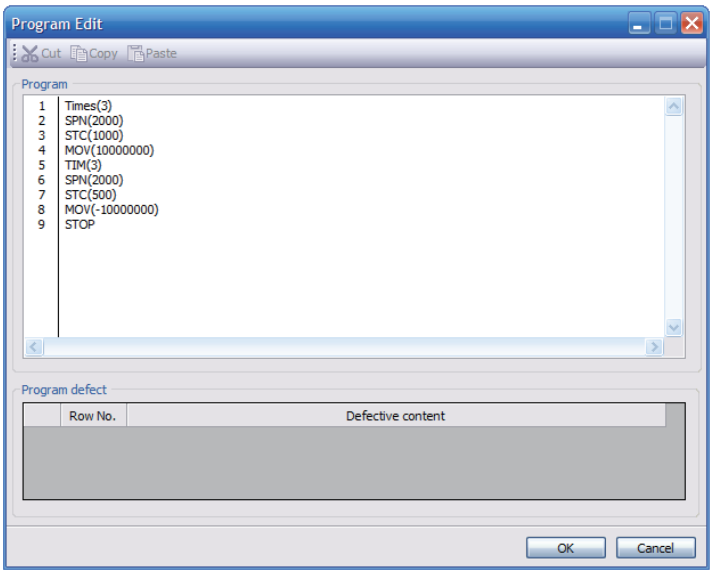

Motor-less operation

Point

- The motor-less operation cannot be used in the fully closed loop control mode, linear servo motor control mode or direct drive motor control mode.

Without connecting a servo motor to the servo amplifier, output signals or status displays can be provided in response to the controller commands as if the servo motor is actually running. This operation can be used to check the sequence of a controller. Use this operation after the forced stop has been released. Use this operation with the servo amplifier connected to the controller.

To perform the motor-less operation, set [Pr. PC60.0 Motor-less operation selection] to "1" (enabled). To terminate the motor-less operation, set [Pr. PC60.0] to "0" (disabled).

To apply the motor-less operation settings, cycle the power or perform a software reset.

Load conditions

The operation is performed in the following conditions. Note that the conditions may differ from those of actual machines.

Load item	Condition
Load torque	0
Load to motor inertia ratio	[Pr. PB06 Load to motor inertia ratio/load to motor mass ratio]

Alarm

In the motor-less operation, some alarms and warnings are not generated. The following are examples of alarms which do not occur.

- [AL. 016 Encoder initial communication error 1]
- [AL. 01E Encoder initial communication error 2]
- [AL. 01F Encoder initial communication error 3]
- [AL. 020 Encoder normal communication error 1]
- [AL. 021 Encoder normal communication error 2]
- [AL. 025 Absolute position erased]
- [AL. 092 Battery cable disconnection warning]
- [AL. 09F Battery warning]

Output signal (DO) forced output

This function forcibly switches the output signals on and off regardless of the servo status. Use this function for purposes such as checking output signal wiring. Operate this function on the DO Forced Output screen of MR Configurator2.

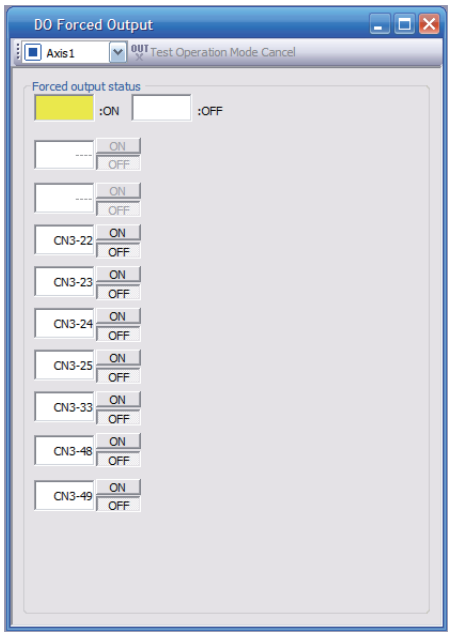

Each output signal can be turned on/off by clicking the ON/OFF button next to its name. After checking, click "Test Operation Mode Cancel" and terminate the output signal (DO) forced output.

4.6 Servo amplifier setting initialization

Servo amplifier settings can be initialized by using the engineering software (MR Mode Change packed with MR Configurator2).
However, information related to the servo amplifier, including power-on cumulative time and the number of relays on/off, is not initialized.

Point

- The storage area of the servo amplifier has a limit for the number of writings. Do not use this function frequently.
- Execute the initialization with the servo amplifier disconnected from the network and directly connected to MR Mode Change via a USB cable.

Initialization procedure by MR Mode Change

Open MR Mode Change and use a USB cable to connect the servo amplifier that will be initialized with a personal computer.
Turn on the servo amplifier control circuit power supply.

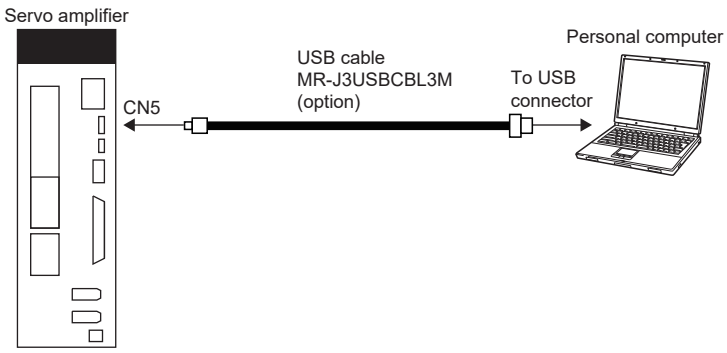

Confirm that "Reset to factory settings" is selected, then click "Write". After the writing is completed, cycle the power or perform a software reset.

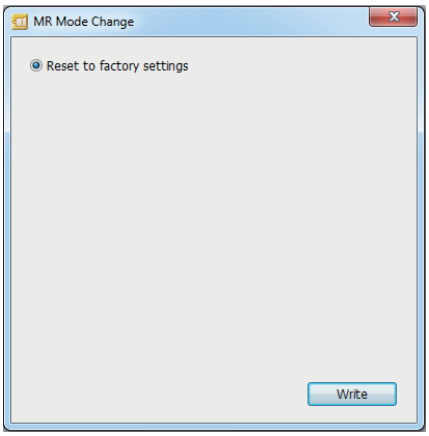

Cycling the power or resetting the software initializes the setting of the servo amplifier at startup. Confirm that the initialization has completed by reading the settings from the servo amplifier.

5 MAINTENANCE, INSPECTION AND PARTS REPLACEMENT

5.1 Inspection items

- Do not disassemble, repair, or modify the product.
- For repair and parts replacement, contact your local sales office.
- To prevent a malfunction, do not perform an insulation resistance test (megger test) on the servo amplifier.

Periodic inspection

Perform the following inspections.

- Check for loose terminal block screws. Retighten any loose screws.
- Check the cables and the like for scratches or cracks. Inspect them periodically according to operating conditions especially when the servo motor is movable.
- Check that the connector is securely connected to the servo amplifier.
- Check that the wires are not coming out from the connector.
- Check for dust accumulation on the servo amplifier.
- Check for unusual noise generated from the servo amplifier.
- Make sure that the emergency stop circuit operates properly such that an operation can be stopped immediately and a power is shut off by the emergency stop switch.

5.2 Parts with a service life

This section describes the service life of parts. The service life varies depending on the operating methods and environment. If any fault is found in a part, it is necessary to replace it immediately regardless of its service life. For parts replacement, please contact your local sales office. Customers can replace the cooling fan by purchasing a fan unit. For details, refer to "Fan unit replacement procedure" in the following manual.

📖MR-J5 User's Manual (Hardware)

Part name	Recommended service life
Smoothing capacitor	10 years
Relay	Total number of power-on, operation of dynamic brake, and forced stops: 100,000 times
Cooling fan	50,000 hours to 70,000 hours (7 to 8 years)
Absolute position battery	Refer to "ABSOLUTE POSITION DETECTION SYSTEM" in the following manual. 📖MR-J5 User's Manual (Hardware)

Smoothing capacitor

The service life of the capacitor is 10 years (with a three-phase power supply input) under continuous operation in air-conditioned environments (ambient temperatures of 40 °C or less at altitudes of up to 1000 m and 30 °C or less at altitudes of over 1000 m and up to 2000 m). Ripple currents or other factors will deteriorate the characteristic of the smoothing capacitor. The service life of the capacitor greatly varies depending on ambient temperature and operating conditions.

Relays

Contact faults occur due to contact wear arisen from switching currents. A relay will reach the end of its service life if the following actions are performed a total of 100,000 times: powering on the servo amplifier, inputting the dynamic brake operation, and inputting the forced stop. In addition, the service life of a relay may vary depending on the power supply capacity.

For the approximate number of times a dynamic brake can be used, refer to "Dynamic brake characteristics" in the following manual.

📖MR-J5 User's Manual (Hardware)

Servo amplifier cooling fan

The cooling fan bearings will reach the end of their service life in 50,000 hours to 70,000 hours. Therefore, the cooling fan must be replaced after seven to eight years of continuous operation as a guideline. If unusual noise or vibration is found during inspection, the cooling fan must also be replaced. The service life has been calculated in an environment which contains no corrosive gas, flammable gas, oil mist, or dust. The average annual ambient temperature was 40 ˚C.

6 COMPLIANCE WITH GLOBAL LAWS AND REGULATIONS

This chapter provides information common among AC servo amplifiers. Information that is not applicable to MR-J5 servo amplifier/other equipment combinations is also included.

6.1 Compliance with global standards

For compliance with the standards of Europe/UK, United States/Canada, and South Korea, refer to the following manual.
Safety Instructions and Precautions for MR-J5 AC Servos (IB(NA)-0300391)

6.2 Handling of AC servo amplifier batteries for the United Nations Recommendations on the Transport of Dangerous Goods

The transportation of lithium metal batteries is regulated under the Technical Instruction (ICAO-TI) by the International Civil Aviation Organization (ICAO) and the International Maritime Dangerous Goods Code (IMDG Code) by the International Maritime Organization (IMO), which are based on the United Nations Recommendations on the Transport of Dangerous Goods (hereinafter Recommendations of the United Nations).
This section describes the handling of lithium metal batteries in air transportation that has been changed in response to the IATA (International Air Transport Association) Dangerous Goods Regulations 63rd Edition issued on January 1, 2022, and the handling of lithium metal batteries in maritime transportation that has also been changed.

Target model

Battery (cell)

Model	Option model	Type	Lithium content	Mass of battery	Remark
ER6	MR-J3BAT	Cell	0.65 g	16 g	Each battery (cell) contains more than 0.3 grams of lithium content and must be handled as dangerous goods (Class 9) for certain packaging requirements.
	MR-J3W03BATSET	Cell	0.65 g	16 g	
ER17330	MR-BAT	Cell	0.48 g	13 g	
	A6BAT	Cell	0.48 g	13 g	

Battery unit (assembled)

Model	Option model	Type	Lithium content	Mass of battery	Remark
ER6	MR-J2M-BT_	Assembled battery (Seven cells)	4.55 g	112 g	The assembled battery contains more than two grams of lithium content and must be handled as dangerous goods (Class 9) regardless of packaging requirements.
CR17335A	MR-BAT6V1	Assembled battery (Two cells)	1.20 g	34 g	Each battery (cell) contains more than 0.3 grams of lithium content and must be handled as dangerous goods (Class 9) for certain packaging requirements.
	MR-BAT6V1SET_	Assembled battery (Two cells)	1.20 g	34 g	
	MR-BAT6V1BJ	Assembled battery (Two cells)	1.20 g	34 g	

Purpose

To enable safer transportation of lithium metal batteries.

Handling during transportation

This section describes how to handle lithium metal batteries in transportation. The batteries alone transported by air are classified as UN3090, and the batteries packed with or contained in equipment transported by air are classified as UN3091. Lithium metal batteries are classified as SP188 when transported by sea as non-dangerous goods.

Air transportation of lithium metal batteries alone

Packaging requirements	Classification	Main requirements
Lithium content per cell ≤ 1 g Lithium content per battery ≤ 2 g	UN3090 PI968 Section IB	The total battery weight per package must be 10 kg or less. The package must pass a 1.2 m drop test, and a lithium battery mark (size: 100 × 100 mm) must be attached on the package. The batteries must be handled conforming to Class 9 Dangerous Goods Regulations (e.g.: displaying the lithium battery hazard label).
Lithium content per cell > 1 g Lithium content per battery > 2 g	UN3090 PI968 Section IA	The total battery weight per package must be 35 kg or less. The package must comply with UN specification packing requirements and be handled complying with Class 9 Dangerous Goods Regulations (e.g.: displaying the lithium battery hazard label).

Transportation of lithium metal batteries alone as cargo on passenger aircraft has been prohibited since January 1, 2015. Lithium metal batteries can be transported by sea or cargo aircraft.

Air transportation of lithium metal batteries packed with or contained in equipment

Lithium metal batteries packed with or contained in equipment can be transported as cargo on passenger aircraft.

■For batteries packed with equipment, follow the requirements of UN3091 PI969.

Batteries are classified into either Section II or Section I depending on the lithium content/packaging requirements.

■For batteries contained in equipment, follow the requirements of UN3091 PI970.

Batteries are classified into either Section II or Section I depending on the lithium content/packaging requirements. The special handling may be unnecessary depending on the number of batteries and gross mass per package.

Maritime transportation of lithium metal batteries

Packaging requirements	Classification	Main requirements
Lithium content per cell ≤ 1 g Lithium content per battery ≤ 2 g	SP188	For transportation of batteries alone, the total weight of the package must be 30 kg or less. The package must pass a 1.2 m drop test, and the lithium battery mark (size: 100 × 100 mm) must be attached on the package. For transportation of batteries packed with or contained in equipment, the special handling may be unnecessary depending on the number of batteries per package.
Lithium content per cell > 1 g Lithium content per battery > 2 g	—	The package must comply with UN specification packaging requirements and be handled complying with Class 9 Dangerous Goods Regulations (e.g.: displaying the lithium battery hazard label).

Package at our shipment

When the packages containing the target batteries are shipped overseas directly from us, the lithium battery mark (Figure 1) is displayed on the packages.
If the packages are shipped domestically, the mark (Figure 1) is not displayed.
Thus, when customers transport the domestic-bound packages overseas, the lithium battery mark (Figure 1) must be displayed on the packages by customers. The responsibility for the cargo lies with the customers. Please contact a transportation company for details on the lithium battery mark (Figure 1).
For both domestic and overseas shipments, the target battery units which must be handled as Class 9 Dangerous Goods are packaged according to UN specification packaging requirements, and the packages bear the lithium battery hazard label (Figure 2).

Figure 1: Lithium battery mark example

* UN number(s)
** Telephone number for additional information

Figure 2: Lithium battery hazard label example

Transportation precaution for customers

For maritime or air transportation, the lithium battery mark (Figure 1) is required also for the outer package containing several packages of Mitsubishi Electric cells or batteries. When the content of a package must be handled as dangerous goods (Class 9), the package must comply with UN specification packaging requirements. Please issue Shipper's Declaration for Dangerous Goods and an Air Waybill (AWB) and attach the lithium battery hazard label (Figure 2) to the packages for transportation.
This section outlines the IATA Dangerous Goods Regulations 63rd Edition and the conditions of SP188 for non-dangerous goods transported by sea. The IATA Dangerous Goods Regulations are revised, and the requirements are changed annually. When customers transport lithium batteries by themselves, the responsibility for the cargo lies with the customers. Thus, be sure to check the latest version of the IATA Dangerous Goods Regulations and International Maritime Dangerous Goods Code (IMDG Code).

6.3 Symbol for EU

The contents of the regulations described in this section apply in countries within the EU.

EU Battery Regulation

To comply with the requirements of the EU Battery Regulation (REGULATION (EU) 2023/1542) newly enacted by the European Commission, which took effect on August 18, 2024, the batteries incorporated in the AC servo amplifier products are marked with the CE mark.

The symbol that is affixed to the battery inside the product is explained here.

Point

- This symbol is valid only in EU.

This symbol is specified in Article 13 "Labelling and marking of batteries" and Annex IV of the EU battery regulation (REGULATION(EU) 2023/1542).
MITSUBISHI ELECTRIC products are designed and manufactured with high quality materials and components which can be recycled and/or reused.
This symbol means that batteries and accumulators, at their end-of-life, should be disposed of separately from household waste.
If a chemical symbol is shown beneath the above symbol, a heavy metal of the corresponding chemical symbol is contained in the battery or the accumulator with the following standard concentration or more.
This will be indicated as follows.
Hg: mercury (0.0005 %), Cd: cadmium (0.002 %), Pb: lead (0.004 %)
In the European Union, there are separate collection systems for used batteries and accumulators. Batteries and accumulators must be disposed of properly.
Help us to conserve the environment we live in.

6.4 Compliance with China Compulsory Certification (CCC)

Introduction

Some products are required to comply with China Compulsory Certification (hereinafter referred to as CCC) if exported, distributed, or sold to China. An outline of CCC is explained in this section. Mitsubishi Electric servo products are not subject to CCC.

CCC mark

Outline of CCC

CCC is a system for product certification that has been in effect in China since August 2003, the purpose of which is to protect consumers and ensure safety domestically in China. The certification system currently has five types of certification: safety, electromagnetic compatibility (EMC), safety + EMC, fire-fighting equipment, and wireless LAN. Products subject to the certification are allowed to be exported, distributed, or sold to China only if they are certified by this system.
Products that have received certification proving compliance with the relevant technical standards (or products declared by the manufacturer as being compliant) must carry the specified mark (CCC mark). Many of the technical standards to be applied are GB standards (Chinese national standards), which comply with global standards such as those set forth by the IEC (International Electrotechnical Commission) and CISPR (International Special Committee on Radio Interference).
As part of the State Administration for Market Supervision and Administration Announcement No. 36 of 2023 ("Administration for Market Supervision and Administration Announcement on the Description of the Catalogue of Compulsory Product Certification and Issue of the List of Products" (Thursday, August 10, 2023)), a revised list of products subject to CCC certification (2023 version) has been published. Simultaneously, the description of the catalogue of compulsory product certification and the list of products in Announcement No. 18 of 2020 (revised 2020) was repealed.

Judgment

16 product groups divided into 96 categories are specified as the subject products (announcement No. 36 of 2023). The following table shows the judgment rendered regarding the CCC compliance requirement for servo products.

Model	Judgment
AC servo amplifier	Not subject
AC servo motor *1	Not subject
Options *2	Not subject

*1 AC servo motors are included in the list of low-power motors (small motors 750 W or less) in the list of products subject to compulsory certification, but are not subject to certification requirements for the following reason.
Explosion proof motors and controlled motors (servo motors, stepping motors, etc.) are excluded from the subject small capacity motors.
*2 Mitsubishi Electric option cables use the wires that is not classified into the cable category in the catalog.

6.5 Compliance with the China RoHS directive

For information on compliance with China RoHS, refer to the following manual.

Safety Instructions and Precautions for AC Servos (IB(NA)-0300391)

REVISIONS

*The manual number is given on the bottom left of the back cover.

Revision date	*Manual number	Description
July 2019	SH(NA)-030296ENG-A	First edition
January 2020	SH(NA)-030296ENG-B	■The following functions are added: Fully closed loop system, super trace control
July 2020	SH(NA)-030296ENG-C	■The MR-J5-500A_, MR-J5-700G_, and models without dynamic brake are added. ■The following function is added: Multifunction regeneration converter ■Added: Section 1.3, Section 1.7, Section 6.4
November 2020	SH(NA)-030296ENG-D	■The MR-J5-60A4_, MR-J5-100A4_, MR-J5-200A4_, and MR-J5-350A4_ are added. ■Added/edited: Section 1.2, Section 1.4, Section 1.5, Section 1.7, Chapter 2, Section 5.3
March 2021	SH(NA)-030296ENG-E	■Added/edited: Section 1.3, Section 1.4, Section 2.1, Section 4.1, Section 4.2, Section 5.2
June 2021	SH(NA)-030296ENG-F	■HK-MT series servo motors are added. ■Edited: Section 1.4, Section 1.7, Section 2.1
July 2022	SH(NA)-030296ENG-G	■Complied with UKCA ■Edited: Section 1.4, Section 1.7, Chapter 4, Chapter 6, Section 6.1, Section 6.2, Section 6.4
January 2023	SH(NA)-030296ENG-H	■EU WEEE Directive is added. ■Added/edited: Section 5.2, Section 5.3, Section 6.3
July 2023	SH(NA)-030296ENG-J	■Edited: Section 1.4, Section 6.3
January 2024	SH(NA)-030296ENG-K	■The MR-J5-500A4_ and MR-J5-700A4_ are added. ■Edited: Section 1.4, Section 5.2
July 2024	SH(NA)-030296ENG-L	■Added/edited: Section 1.4, Chapter 3, Chapter 6, Section 6.4
January 2025	SH(NA)-030296ENG-M	■The MR-J5-12KA(4)_, MR-J5-17KA(4)_, and MR-J5-25KA(4)_ are added. ■Added/edited: Section 1.2, Section 1.4, Section 1.5, Section 1.7, Section 3.1
July 2025	SH(NA)-030296ENG-N	■MR-CM08K1 and special coating specification products are added. ■Added/edited: Section 1.2, Section 1.4, Section 1.7, Section 2.2, Section 6.2, Section 6.3
February 2026	SH(NA)-030296ENG-P	■Added/edited: ABOUT THE MANUAL, Section 1.2, Section 1.6, Section 4.5, Section 6.5
October 2026	SH(NA)-030296ENG-Q	■Edited: Section 1.4

This manual confers no industrial property rights or any rights of any other kind, nor does it confer any patent licenses. Mitsubishi Electric Corporation cannot be held responsible for any problems involving industrial property rights which may occur as a result of using the contents noted in this manual.

© 2019 MITSUBISHI ELECTRIC CORPORATION

WARRANTY

Warranty

1. Warranty period and coverage

We will repair any failure or defect hereinafter referred to as "failure" in our FA equipment hereinafter referred to as the "Product" arisen during warranty period at no charge due to causes for which we are responsible through the distributor from which you purchased the Product or our service provider. However, we will charge the actual cost of dispatching our engineer for an on-site repair work on request by customer in Japan or overseas countries. We are not responsible for any on-site readjustment and/or trial run that may be required after a defective unit is repaired or replaced.

[Term]

For terms of warranty, please contact your original place of purchase.

[Limitations]

(1) You are requested to conduct an initial failure diagnosis by yourself, as a general rule.
It can also be carried out by us or our service company upon your request and the actual cost will be charged. However, it will not be charged if we are responsible for the cause of the failure.

(2) This limited warranty applies only when the condition, method, environment, etc. of use are in compliance with the terms and conditions and instructions that are set forth in the instruction manual and user manual for the Product and the caution label affixed to the Product.

(3) Even during the term of warranty, the repair cost will be charged on you in the following cases;

1. a failure caused by your improper storing or handling, carelessness or negligence, etc., and a failure caused by your hardware or software problem
2. a failure caused by any alteration, etc. to the Product made on your side without our approval
3. a failure which may be regarded as avoidable, if your equipment in which the Product is incorporated is equipped with a safety device required by applicable laws and has any function or structure considered to be indispensable according to a common sense in the industry
4. a failure which may be regarded as avoidable if consumable parts designated in the instruction manual, etc. are duly maintained and replaced
5. any replacement of consumable parts (battery, fan, smoothing capacitor, etc.)
6. a failure caused by external factors such as inevitable accidents, including without limitation fire and abnormal fluctuation of voltage, and acts of God, including without limitation earthquake, lightning and natural disasters
7. a failure generated by an unforeseeable cause with a scientific technology that was not available at the time of the shipment of the Product from our company
8. any other failures which we are not responsible for or which you acknowledge we are not responsible for

2. Term of warranty after the stop of production

(1) We may accept the repair at charge for another seven (7) years after the production of the product is discontinued. The announcement of the stop of production for each model can be seen in our Sales and Service, etc.

(2) Please note that the Product (including its spare parts) cannot be ordered after its stop of production.

3. Service in overseas countries

Our regional FA Center in overseas countries will accept the repair work of the Product. However, the terms and conditions of the repair work may differ depending on each FA Center. Please ask your local FA center for details.

4. Exclusion of loss in opportunity and secondary loss from warranty liability

Regardless of the gratis warranty term, Mitsubishi shall not be liable for compensation to:

(1) Damages caused by any cause found not to be the responsibility of Mitsubishi.

(2) Loss in opportunity, lost profits incurred to the user by Failures of Mitsubishi products.

(3) Special damages and secondary damages whether foreseeable or not, compensation for accidents, and compensation for damages to products other than Mitsubishi products.

(4) Replacement by the user, maintenance of on-site equipment, start-up test run and other tasks.

5. Change of Product specifications

Specifications listed in our catalogs, manuals or technical documents may be changed without notice.

6. Application and use of the Product

(1) For the use of our AC Servo, its applications should be those that may not result in a serious damage even if any failure or malfunction occurs in AC Servo, and a backup or fail-safe function should operate on an external system to AC Servo when any failure or malfunction occurs.

(2) Our AC Servo is designed and manufactured as a general purpose product for use at general industries.
Therefore, applications substantially influential on the public interest for such as atomic power plants and other power plants of electric power companies, and also which require a special quality assurance system, including applications for railway companies and government or public offices are not recommended, and we assume no responsibility for any failure caused by these applications when used.
In addition, applications which may be substantially influential to human lives or properties for such as airlines, medical treatments, railway service, incineration and fuel systems, man-operated material handling equipment, entertainment machines, safety machines, etc. are not recommended, and we assume no responsibility for any failure caused by these applications when used.
We will review the acceptability of the abovementioned applications, if you agree not to require a specific quality for a specific application. Please contact us for consultation.

(3) Mitsubishi Electric shall have no responsibility or liability for any problems involving programmable controller trouble and system trouble caused by DoS attacks, unauthorized access, computer viruses, and other cyberattacks.

TRADEMARKS

MELSERVO is a trademark or registered trademark of Mitsubishi Electric Corporation in Japan and/or other countries.
All other product names and company names are trademarks or registered trademarks of their respective companies.

TRANSLATION OF THE ORIGINAL INSTRUCTIONS

SH(NA)-030296ENG-Q(2610)MEE
MODEL:
MODEL CODE:

MITSUBISHI ELECTRIC CORPORATION

HEAD OFFICE: TOKYO BLDG., 2-7-3, MARUNOUCHI, CHIYODA-KU, TOKYO 100-8310, JAPAN
NAGOYA WORKS: 1-14, YADA-MINAMI 5-CHOME, HIGASHI-KU, NAGOYA 461-8670, JAPAN

When exported from Japan, this manual does not require application to the Ministry of Economy, Trade and Industry for service transaction permission.

Specifications subject to change without notice.
Compliance with the indicated global standards and regulations is current as of the release date of this manual.