MITSUBISHI ELECTRIC

AC Servo System

MITSUBISHI ELECTRIC SERVO SYSTEM
MELSERVO-J5

MR-J5-B/MR-J5W-B User's Manual (Parameters)

-MR-J5-_B_
-MR-J5W_-_B_

SAFETY INSTRUCTIONS

Please read the instructions carefully before using the equipment.
To use the equipment correctly, do not attempt to install, operate, maintain, or inspect the equipment until you have read through this manual, installation guide, and appended documents carefully. Do not use the equipment until you have a full knowledge of the equipment, safety information and instructions.
In this manual, the safety instruction levels are classified into "WARNING" and "CAUTION".

⚠ **WARNING**	Indicates that incorrect handling may cause hazardous conditions, resulting in death or severe injury.
⚠ **CAUTION**	Indicates that incorrect handling may cause hazardous conditions, resulting in medium or slight injury.

Note that the CAUTION level may lead to a serious consequence depending on conditions.
Please follow the instructions of both levels because they are important to personnel safety.
Forbidden actions and required actions are indicated by the following diagrammatic symbols.

⃠	Indicates a forbidden action. For example, "No Fire" is indicated by 🚭.
●	Indicates a required action. For example, grounding is indicated by ⏚.

In this manual, precautions for hazards that can lead to property damage, instructions for other functions, and other information are shown separately in the "Point" area.
After reading this manual, keep it accessible to the operator.

[Installation/wiring]

⚠WARNING

- To prevent an electric shock, turn off the power and wait for 15 minutes or more before starting wiring and/or inspection.
- To prevent an electric shock, ground the servo amplifier.
- To prevent an electric shock, any person who is involved in wiring should be fully competent to do the work.
- To prevent an electric shock, mount the servo amplifier before wiring.
- To prevent an electric shock, connect the protective earth (PE) terminal of the servo amplifier to the protective earth (PE) of the cabinet, then connect the grounding lead wire to the ground.
- To prevent an electric shock, do not touch the conductive parts.

[Setting/adjustment]

⚠WARNING

- To prevent an electric shock, do not operate the switches with wet hands.

[Operation]

⚠WARNING

- To prevent an electric shock, do not operate the switches with wet hands.

[Maintenance]

⚠WARNING

- To prevent an electric shock, any person who is involved in inspection should be fully competent to do the work.
- To prevent an electric shock, do not operate the switches with wet hands.

ABOUT THE MANUAL

If you are using the servo for the first time, prepare and refer to the related manuals as necessary to ensure safe operation of the servo. For the related manuals, refer to the User's Manual (Introduction).

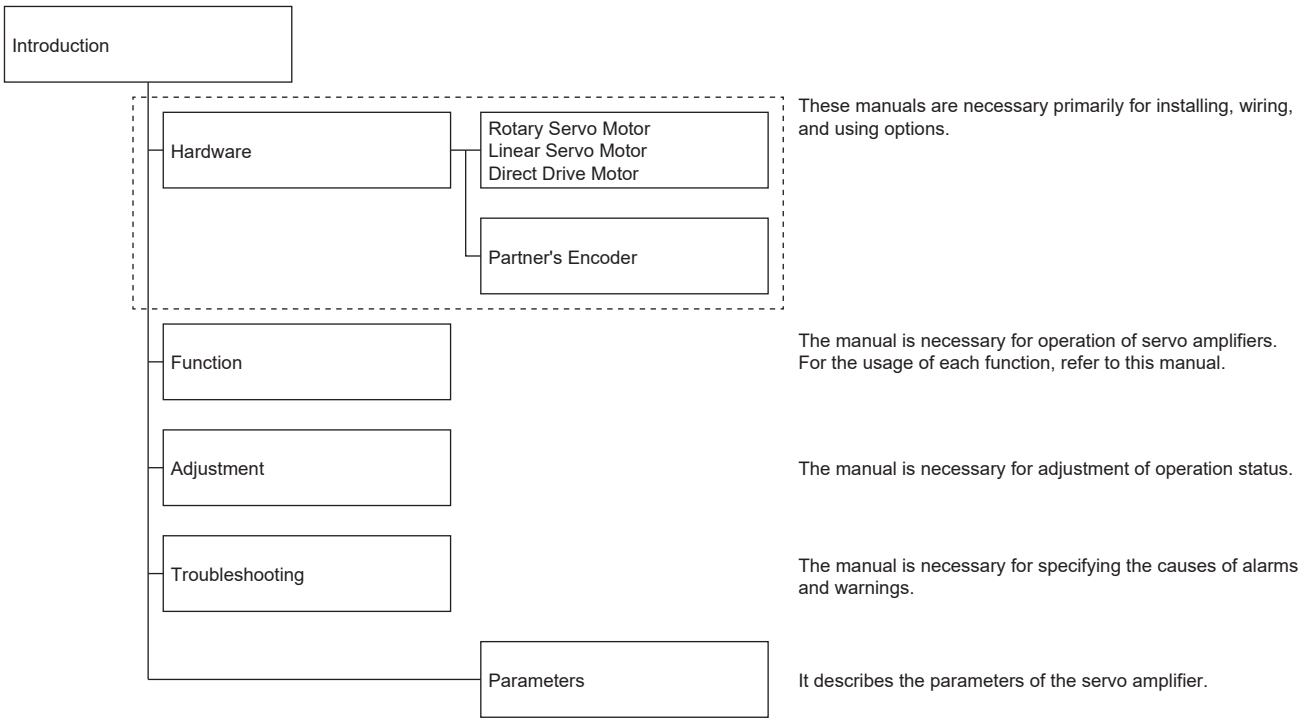

Interpreting servo parameter numbers

For a servo parameter which uses each digit in hexadecimal to select a function, each digit is indicated by the detail number. For example, the detail number of the last digit is expressed as [Pr. PA01.0]. In addition, a servo parameter, which uses a combination of several digits to select a function, is represented using "-" as seen in [Pr. PA01.0-1].

The following shows an example in which the servo parameter number is PA01 and the setting value is represented in hexadecimal as "FEDCBA98".

- When setting a servo parameter using each digit

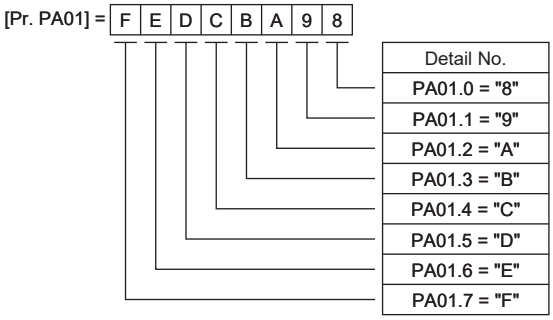

- When setting a servo parameter using a combination of several digits

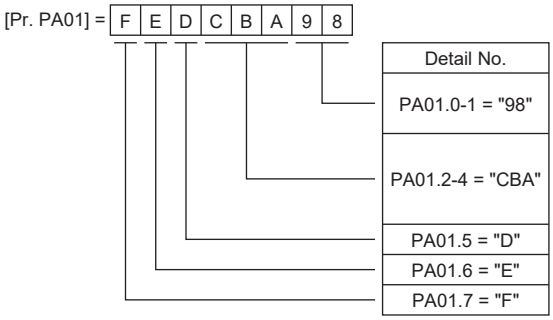

For example, when the servo parameter name is "Function selection A-1", the setting digit name is "Forced stop deceleration function selection", and the servo parameter number is PA04, fourth digit, it is as follows.

[Pr. PA04.3 Forced stop deceleration function selection]

Servo parameter	Symbol	Name	Description
PA04.3	*AOP	Forced stop deceleration function selection	Enable or disable the forced stop deceleration function. Initial value: 1h (enabled)

Global standards and regulations

Compliance with the indicated global standards and regulations is current as of the release date of this manual. Some standards and regulations may have been modified or withdrawn.

DEFINITION OF TERMS IN COMMON BUS CONNECTION

The terms related to the construction of the common bus connection system are defined as follows:
Main unit: The servo amplifier connected to the 3-phase AC input power supply. It is the axis with the largest capacity in the servo system.
Sub unit: The servo amplifier not connected to the 3-phase AC input power supply. It is the axis powered by the bus of the main unit.

U.S. CUSTOMARY UNITS

U.S. customary units are not shown in this manual. Convert the values if necessary according to the following table.

Quantity	SI (metric) unit	U.S. customary unit
Mass	1 [kg]	2.2046 [lb]
Length	1 [mm]	0.03937 [inch]
Torque	1 [N•m]	141.6 [oz•inch]
Moment of inertia	1 [(× 10^{-4} kg•m^2)]	5.4675 [oz•$inch^2$]
Load (thrust load/axial load)	1 [N]	0.2248 [lbf]
Temperature	N [°C] × 9/5 + 32	N [°F]

CONTENTS

SAFETY INSTRUCTIONS. 1
ABOUT THE MANUAL 3
DEFINITION OF TERMS IN COMMON BUS CONNECTION. 5
U.S. CUSTOMARY UNITS 5

CHAPTER 1 SERVO PARAMETER DETAILS 12

1.1 Explanation of servo parameters. 13
1.2 Basic setting servo parameters group ([Pr. PA_ _]) 14
[Pr. PA01_Operation mode (**STY)] 14
[Pr. PA02_Regenerative option (**REG)] 15
[Pr. PA03_Absolute position detection system (*ABS)] 17
[Pr. PA04_Function selection A-1 (*AOP1)]. 18
[Pr. PA06_Electronic gear numerator (*CMX)] 18
[Pr. PA07_Electronic gear denominator (*CDV)] 19
[Pr. PA08_Auto tuning mode (ATU)] 19
[Pr. PA09_Auto tuning response (RSP)] 21
[Pr. PA10_In-position range (INP)] 22
[Pr. PA14_Travel direction selection (*POL)]. 22
[Pr. PA15_Encoder output pulses (*ENR)] 25
[Pr. PA16_Encoder output pulses 2 (*ENR2)] 25
[Pr. PA17_Servo motor series setting (**MSR)]. 26
[Pr. PA18_Servo motor type setting (**MTY)] 27
[Pr. PA20_Tough drive setting (*TDS)] 28
[Pr. PA21_Function selection A-3 (*AOP3)]. 29
[Pr. PA22_Position control configuration selection (**PCS)] 29
[Pr. PA23_Drive recorder desired alarm trigger setting (DRAT)] 30
[Pr. PA24_Function selection A-4 (AOP4)] 31
[Pr. PA25_One-touch tuning - Overshoot permissible level (OTHOV)] 31
[Pr. PA26_Function selection A-5 (*AOP5)]. 31
[Pr. PA28_Function selection A-6 (**AOP6)] 32
[Pr. PA34_Quick tuning - Permissible travel distance (QDIS)] 32
1.3 Gain/filter setting servo parameters group ([Pr. PB_ _]) 33
[Pr. PB01_Adaptive tuning mode (adaptive filter II) (FILT)] 33
[Pr. PB02_Vibration suppression control tuning mode (advanced vibration suppression control II) (VRFT)] . . . 34
[Pr. PB03_Torque feedback loop gain (TFBGN)]. 34
[Pr. PB04_Feed forward gain (FFC)] 34
[Pr. PB06_Load to motor inertia ratio/load to motor mass ratio (GD2)] 35
[Pr. PB07_Model control gain (PG1)] 35
[Pr. PB08_Position control gain (PG2)] 36
[Pr. PB09_Speed control gain (VG2)] 36
[Pr. PB10_Speed integral compensation (VIC)] 36
[Pr. PB11_Speed differential compensation (VDC)] 37
[Pr. PB12_Overshoot amount compensation (OVA)]. 37
[Pr. PB13_Machine resonance suppression filter 1 (NH1)] 37
[Pr. PB14_Notch shape selection 1 (NHQ1)]. 38
[Pr. PB15_Machine resonance suppression filter 2 (NH2)] 38
[Pr. PB16_Notch shape selection 2 (NHQ2)]. 39
[Pr. PB17_Shaft resonance suppression filter (NHF)] 40

[Pr. PB18_Low-pass filter setting (LPF)] . . . 43
[Pr. PB19_Vibration suppression control 1 - Vibration frequency (VRF11)] . . . 44
[Pr. PB20_Vibration suppression control 1 - Resonance frequency (VRF12)] . . . 44
[Pr. PB21_Vibration suppression control 1 - Vibration frequency damping (VRF13)] . . . 44
[Pr. PB22_Vibration suppression control 1 - Resonance frequency damping (VRF14)] . . . 44
[Pr. PB23_Low-pass filter selection (VFBF)] . . . 45
[Pr. PB24_Slight vibration suppression control (*MVS)] . . . 46
[Pr. PB25_Function selection B-1 (*BOP1)] . . . 46
[Pr. PB26_Gain switching function (*CDP)] . . . 47
[Pr. PB27_Gain switching condition (CDL)] . . . 48
[Pr. PB28_Gain switching time constant (CDT)] . . . 48
[Pr. PB29_Gain switching - Load to motor inertia ratio/load to motor mass ratio (GD2B)] . . . 49
[Pr. PB30_Gain switching - Position control gain (PG2B)] . . . 49
[Pr. PB31_Gain switching - Speed control gain (VG2B)] . . . 49
[Pr. PB32_Gain switching - Speed integral compensation (VICB)] . . . 49
[Pr. PB33_Gain switching - Vibration suppression control 1 - Vibration frequency (VRF11B)] . . . 49
[Pr. PB34_Gain switching - Vibration suppression control 1 - Resonance frequency (VRF12B)] . . . 50
[Pr. PB35_Gain switching - Vibration suppression control 1 - Vibration frequency damping (VRF13B)] . . . 50
[Pr. PB36_Gain switching - Vibration suppression control 1 - Resonance frequency damping (VRF14B)] . . . 50
[Pr. PB45_Command notch filter (CNHF)] . . . 51
[Pr. PB46_Machine resonance suppression filter 3 (NH3)] . . . 54
[Pr. PB47_Notch shape selection 3 (NHQ3)] . . . 54
[Pr. PB48_Machine resonance suppression filter 4 (NH4)] . . . 55
[Pr. PB49_Notch shape selection 4 (NHQ4)] . . . 55
[Pr. PB50_Machine resonance suppression filter 5 (NH5)] . . . 56
[Pr. PB51_Notch shape selection 5 (NHQ5)] . . . 56
[Pr. PB52_Vibration suppression control 2 - Vibration frequency (VRF21)] . . . 57
[Pr. PB53_Vibration suppression control 2 - Resonance frequency (VRF22)] . . . 57
[Pr. PB54_Vibration suppression control 2 - Vibration frequency damping (VRF23)] . . . 57
[Pr. PB55_Vibration suppression control 2 - Resonance frequency damping (VRF24)] . . . 57
[Pr. PB56_Gain switching - Vibration suppression control 2 - Vibration frequency (VRF21B)] . . . 58
[Pr. PB57_Gain switching - Vibration suppression control 2 - Resonance frequency (VRF22B)] . . . 58
[Pr. PB58_Gain switching - Vibration suppression control 2 - Vibration frequency damping (VRF23B)] . . . 58
[Pr. PB59_Gain switching - Vibration suppression control 2 - Resonance frequency damping (VRF24B)] . . . 59
[Pr. PB60_Gain switching - Model control gain (PG1B)] . . . 59
[Pr. PB65_Gain switching 2 condition (CDL2)] . . . 59
[Pr. PB66_Gain switching 2 time constant (CDT2)] . . . 60
[Pr. PB67_Gain switching 2 - Load to motor inertia ratio/load to motor mass ratio (GD2C)] . . . 60
[Pr. PB68_Gain switching 2 - Position control gain (PG2C)] . . . 60
[Pr. PB69_Gain switching 2 - Speed control gain (VG2C)] . . . 60
[Pr. PB70_Gain switching 2 - Speed integral compensation (VICC)] . . . 60
[Pr. PB71_Gain switching 2 - Vibration suppression control 1 - Vibration frequency (VRF11C)] . . . 61
[Pr. PB72_Gain switching 2 - Vibration suppression control 1 - Resonance frequency (VRF12C)] . . . 61
[Pr. PB73_Gain switching 2 - Vibration suppression control 1 - Vibration frequency damping (VRF13C)] . . . 61
[Pr. PB74_Gain switching 2 - Vibration suppression control 1 - Resonance frequency damping (VRF14C)] . . . 62
[Pr. PB75_Gain switching 2 - Vibration suppression control 2 - Vibration frequency (VRF21C)] . . . 62
[Pr. PB76_Gain switching 2 - Vibration suppression control 2 - Resonance frequency (VRF22C)] . . . 62
[Pr. PB77_Gain switching 2 - Vibration suppression control 2 - Vibration frequency damping (VRF23C)] . . . 63
[Pr. PB78_Gain switching 2 - Vibration suppression control 2 - Resonance frequency damping (VRF24C)] . . . 63
[Pr. PB79_Gain switching 2 - Model control gain (PG1C)] . . . 63
[Pr. PB81_Command filter (*CFIL)] . . . 64

[Pr. PB82_Position command smoothing filter time constant (PFT)] 64
1.4 Extension setting servo parameters group ([Pr. PC_ _]) 65
[Pr. PC01_Excessive error alarm trigger level (ERZ)] 65
[Pr. PC02_Electromagnetic brake sequence output (MBR)] 65
[Pr. PC03_Encoder output pulses selection (*ENRS)] 65
[Pr. PC04_Function selection C-1 (**COP1)] 68
[Pr. PC05_Function selection C-2 (**COP2)] 68
[Pr. PC06_Function selection C-3 (*COP3)] 69
[Pr. PC07_Zero speed (ZSP)] 69
[Pr. PC08_Overspeed alarm detection level (OSL)] 69
[Pr. PC09_Analog monitor 1 output (MOD1)] 70
[Pr. PC10_Analog monitor 2 output (MOD2)] 71
[Pr. PC11_Analog monitor 1 offset (MO1)] 71
[Pr. PC12_Analog monitor 2 offset (MO2)] 71
[Pr. PC17_Function selection C-4 (**COP4)] 71
[Pr. PC18_Function selection C-5 (*COP5)] 72
[Pr. PC19_Function selection C-6 (*COP6)] 72
[Pr. PC20_Function selection C-7 (*COP7)] 73
[Pr. PC21_Alarm history clear (*BPS)] 74
[Pr. PC24_Deceleration time constant at forced stop (RSBR)] 74
[Pr. PC26_Function selection C-8 (**COP8)] 75
[Pr. PC27_Function selection C-9 (**COP9)] 75
[Pr. PC29_Function selection C-B (*COPB)] 76
[Pr. PC31_Vertical axis freefall prevention compensation amount (RSUP1)] 77
[Pr. PC37_Function selection C-D (**COPD)] 77
[Pr. PC38_Excessive error warning trigger level (ERW)] 78
[Pr. PC84_Servo amplifier replacement data 1 (SVDT1)] 79
[Pr. PC85_Servo amplifier replacement data 2 (SVDT2)] 79
[Pr. PC86_Servo amplifier replacement data 3 (SVDT3)] 79
[Pr. PC87_Servo amplifier replacement data 4 (SVDT4)] 79
[Pr. PC88_Servo amplifier replacement data 5 (SVDT5)] 79
[Pr. PC89_Servo amplifier replacement data 6 (SVDT6)] 80
[Pr. PC90_Servo amplifier replacement data 7 (SVDT7)] 80
[Pr. PC91_Servo amplifier replacement data 8 (SVDT8)] 80
[Pr. PC92_Servo amplifier replacement data 9 (SVDT9)] 80
[Pr. PC93_Servo amplifier replacement data 10 (SVDT10)] 81
[Pr. PC94_Servo amplifier replacement data 11 (SVDT11)] 81
[Pr. PC95_Servo amplifier replacement data 12 (SVDT12)] 81
[Pr. PC96_Output open-phase detection time (*OPDT)] 82
1.5 I/O setting servo parameters group ([Pr. PD_ _]) 83
[Pr. PD02_Input signal automatic ON selection 2 (*DIA2)] 83
[Pr. PD07_Output device selection 1 (*DO1)] 84
[Pr. PD08_Output device selection 2 (*DO2)] 85
[Pr. PD09_Output device selection 3 (*DO3)] 86
[Pr. PD11_Input filter setting (*DIF)] 87
[Pr. PD12_Function selection D-1 (*DOP1)] 87
[Pr. PD13_Function selection D-2 (*DOP2)] 88
[Pr. PD14_Function selection D-3 (*DOP3)] 88
[Pr. PD15_Driver communication setting (*IDCS)] 89
[Pr. PD16_Driver communication setting - Master - Transmit data selection 1 (*MD1)] 89
[Pr. PD17_Driver communication setting - Master - Transmit data selection 2 (*MD2)] 89

[Pr. PD20_Driver communication setting - Slave - Master axis No. selection 1 (*SLA1)] 90
[Pr. PD30_Master-slave operation - Slave-side torque command coefficient (TLS)] 90
[Pr. PD31_Master-slave operation - Slave-side speed limit coefficient (VLC)] 90
[Pr. PD32_Master-slave operation - Slave-side speed limit adjusted value (VLL)] 91
1.6 Extension setting 2 servo parameters group ([Pr. PE_ _]) 92
[Pr. PE01_Fully closed loop control function selection 1 (**FCT1)] 92
[Pr. PE03_Fully closed loop control function selection 2 (*FCT2)] 93
[Pr. PE04_Fully closed loop control - Feedback pulse electronic gear 1 - Numerator (**FBN)] 94
[Pr. PE05_Fully closed loop control - Feedback pulse electronic gear 1 - Denominator (**FBD)] 94
[Pr. PE06_Fully closed loop control - Speed deviation error detection level (BC1)] 94
[Pr. PE07_Fully closed loop control - Position deviation error detection level (BC2)] 94
[Pr. PE08_Fully closed loop dual feedback filter (DUF)] 94
[Pr. PE10_Fully closed loop function selection 3 (FCT3)] 95
[Pr. PE41_Function selection E-3 (EOP3)] 95
[Pr. PE44_Lost motion compensation positive-side compensation value selection (LMCP)] 96
[Pr. PE45_Lost motion compensation negative-side compensation value selection (LMCN)] 96
[Pr. PE46_Lost motion filter setting (LMFLT)] 96
[Pr. PE47_Unbalanced torque offset (TOF)] 96
[Pr. PE48_Lost motion compensation function selection (*LMOP)] 97
[Pr. PE49_Lost motion compensation timing (LMCD)] 97
[Pr. PE50_Lost motion compensation dead band (LMCT)] 97
[Pr. PE51_Load-side encoder resolution setting (**EDV2)] 97
1.7 Extension setting 3 servo parameters group ([Pr. PF_ _]) 99
[Pr. PF02_Function selection F-2 (*FOP2)] 99
[Pr. PF06_Function selection F-5 (*FOP5)] 100
[Pr. PF12_Electronic dynamic brake operating time (DBT)] 100
[Pr. PF18_STO diagnosis error detection time (**STOD)] 101
[Pr. PF19_Friction failure prediction - Compensation coefficient 1 (TSL)] 101
[Pr. PF20_Friction failure prediction - Compensation coefficient 2 (TIC)] 101
[Pr. PF21_Drive recorder switching time setting (DRT)] 102
[Pr. PF23_Vibration tough drive - Oscillation detection level (OSCL1)] 102
[Pr. PF24_Function selection F-9 (*FOP9)] 102
[Pr. PF25_SEMI-F47 function - Instantaneous power failure detection time
(Instantaneous power failure tough drive detection time) (CVAT)] 103
[Pr. PF31_Machine diagnosis function - Friction estimate area judgment speed at low speed (FRIC)] 103
[Pr. PF34_Machine diagnosis function selection (*MFP)] 104
[Pr. PF40_Machine failure prediction servo parameter (MFPP)] 106
[Pr. PF41_Failure prediction - Servo motor total travel distance (FPMT)] 108
[Pr. PF42_Friction failure prediction - Average characteristics (PAV)] 108
[Pr. PF43_Friction failure prediction - Standard deviation (PSD)] 108
[Pr. PF45_Vibration failure prediction - Average characteristics (VAV)] 108
[Pr. PF46_Vibration failure prediction - Standard deviation (VSD)] 109
[Pr. PF47_Servo motor total travel distance offset (TMO)] 109
[Pr. PF63_Function selection F-15 (*FOP15)] 109
[Pr. PF66_Gear setting for backlash estimation (BLG)] 110
[Pr. PF67_Backlash nominal value (BLN)] 111
[Pr. PF68_Backlash threshold multiplication (BLTT)] 111
[Pr. PF69_Static friction failure prediction - Average characteristics (SPAV2)] 111
[Pr. PF70_Static friction failure prediction - Standard deviation (SPSD2)] 111
[Pr. PF71_Belt failure prediction function selection (BFP)] 112
[Pr. PF72_Belt tension on installation (SBT)] 112

[Pr. PF73_Belt tension when extended (ABT)] . . . 112
[Pr. PF74_Static friction during installation (SSF)] . . . 113
[Pr. PF75_Static friction when extended (ASF)] . . . 113
[Pr. PF76_Belt tension irregular threshold (BTS)] . . . 113
[Pr. PF80_Drive recorder - Operation condition selection (DRMC)] . . . 114
[Pr. PF81_Drive recorder - Sampling operation selection (DRMS)] . . . 115
[Pr. PF82_Drive recorder - Trigger operation selection (DRTM)] . . . 116
[Pr. PF83_Drive recorder - Trigger operation axis common selection (**DRTAX)] . . . 118
[Pr. PF84_Drive recorder - Trigger channel selection (DRTC)] . . . 119
[Pr. PF85_Drive recorder - Trigger level setting 1 (DRTL1)] . . . 120
[Pr. PF86_Drive recorder - Trigger level setting 2 (DRTL2)] . . . 120
[Pr. PF87_Drive recorder - Analog channel setting 1 (DRAC1)] . . . 121
[Pr. PF88_Drive recorder - Analog channel setting 2 (DRAC2)] . . . 123
[Pr. PF89_Drive recorder - Analog channel setting 3 (DRAC3)] . . . 124
[Pr. PF90_Drive recorder - Analog channel setting 4 (DRAC4)] . . . 124
[Pr. PF91_Drive recorder - Digital channel setting 1 (DRDC1)] . . . 125
[Pr. PF92_Drive recorder - Digital channel setting 2 (DRDC2)] . . . 127
[Pr. PF93_Drive recorder - Digital channel setting 3 (DRDC3)] . . . 127
[Pr. PF94_Drive recorder - Digital channel setting 4 (DRDC4)] . . . 128
[Pr. PF95_Drive recorder - Clear history (**DRCLR)] . . . 128
1.8 Motor extension setting servo parameters group ([Pr. PL_ _]) . . . 129
[Pr. PL01_Function selection L-1 (**LIT1)] . . . 129
[Pr. PL02_Linear encoder resolution setting - Numerator (**LIM)] . . . 129
[Pr. PL03_Linear encoder resolution setting - Denominator (**LID)] . . . 130
[Pr. PL04_Function selection L-2 (*LIT2)] . . . 130
[Pr. PL05_Position deviation error detection level (LB1)] . . . 131
[Pr. PL06_Speed deviation error detection level (LB2)] . . . 131
[Pr. PL07_Torque deviation error detection level (LB3)] . . . 131
[Pr. PL08_Function selection L-3 (*LIT3)] . . . 132
[Pr. PL09_Magnetic pole detection voltage level (LPWM)] . . . 132
[Pr. PL17_Magnetic pole detection - Minute position detection method - Function selection (LTSTS)] . . . 133
[Pr. PL18_Magnetic pole detection - Minute position detection method - Identification signal amplitude (IDLV)] . . . 134
1.9 Extension setting 4 servo parameters group ([Pr. PW_ _]) . . . 135
[Pr. PW01_Pressure control gain (APA)] . . . 135
[Pr. PW02_Pressure integral compensation (AIA)] . . . 135
[Pr. PW03_Pressure incomplete integral coefficient (ADA)] . . . 135
[Pr. PW12_Function selection W-1 (*WOP1)] . . . 136
[Pr. PW13_Function selection W-2 (*WOP2)] . . . 137
[Pr. PW20_Pressure control feedback selection (**LDS)] . . . 138
[Pr. PW21_Pressure control feedback offset (AFBO)] . . . 138
[Pr. PW22_Pressure control feedback unit constant (AFBD)] . . . 138
[Pr. PW23_Analog monitor input 1 offset (AO1)] . . . 138
[Pr. PW24_Analog monitor input 1 unit constant (AD1)] . . . 139
[Pr. PW25_Analog monitor input 2 offset (AO2)] . . . 139
[Pr. PW26_Analog monitor input 2 unit constant (AD2)] . . . 139
[Pr. PW27_Analog monitor input filter setting (ADF)] . . . 140
[Pr. PW33_Pressure control moving average filter setting (*MAF)] . . . 141
[Pr. PW34_Function selection W-5 (*WOP5)] . . . 142
[Pr. PW35_Pressure model control gain (AMPA)] . . . 142
[Pr. PW36_Pressure model control coefficient (AMCEF)] . . . 142

CHAPTER 2 LISTS OF SERVO PARAMETER SUPPORTED MODES 143

2.1 Structure **143**

2.2 Lists of supported control modes **144**

Basic setting servo parameters group ([Pr. PA_ _]) 144

Gain/filter setting servo parameters group ([Pr. PB_ _]) 145

Extension setting servo parameters group ([Pr. PC_ _]) 147

I/O setting servo parameters group ([Pr. PD_ _]) 148

Extension setting 2 servo parameters group ([Pr. PE_ _]) 149

Extension setting 3 servo parameters group ([Pr. PF_ _]) 150

Motor extension setting servo parameters group ([Pr. PL_ _]) 151

Extension setting 4 servo parameters group ([Pr. PW_ _]) 152

CHAPTER 3 LISTS OF SERVO PARAMETER INITIAL VALUES 153

3.1 Basic setting servo parameters group ([Pr. PA_ _]) **153**

3.2 Gain/filter setting servo parameters group ([Pr. PB_ _]) **155**

3.3 Extension setting servo parameters group ([Pr. PC_ _]) **157**

3.4 I/O setting servo parameters group ([Pr. PD_ _]) **159**

3.5 Extension setting 2 servo parameters group ([Pr. PE_ _]) **161**

3.6 Extension setting 3 servo parameters group ([Pr. PF_ _]) **163**

3.7 Motor extension setting servo parameters group ([Pr. PL_ _]) **165**

3.8 Extension setting 4 servo parameters group ([Pr. PW_ _]) **167**

CHAPTER 4 SERVO PARAMETER SETTING METHOD 168

4.1 Engineering software **168**

4.2 Controller **168**

REVISIONS 170

WARRANTY 171

TRADEMARKS 172

CONTENTS

1 SERVO PARAMETER DETAILS

Restrictions

Settable servo parameters and values depend on the controller model, servo amplifier firmware version, and MR Configurator2 software version. For details, refer to the controller user's manual. Refer to the Mitsubishi Electric FA site for the latest software version of MR Configurator2. In addition, the firmware version of the servo amplifier can be checked with MR Configurator2 or by other means.

When using servo motors with functional safety, executing software reset may trigger [AL. 016 Encoder initial communication error 1]. If [AL. 016] occurs, cycle the power.

Precautions

Never make a drastic adjustment or change to the servo parameter values as doing so will make the operation unstable.

Do not change the servo parameter settings as described below. Doing so may cause an unexpected condition, such as failing to start up the servo amplifier.

- Changing the values of the servo parameters for manufacturer setting
- Setting a value outside the range
- Changing the fixed value in each servo parameter

When writing servo parameters with the controller, make sure that the control axis No. of the servo amplifier is set correctly. Failure to do so may cause the servo parameter settings of another axis to be written and result in the servo amplifier being in an unexpected condition.

Some servo parameters are adjusted automatically. For example, auto tuning automatically adjusts gain servo parameters.

1.1 Explanation of servo parameters

For how to interpret the servo parameter numbers, refer to the following.

☞ Page 4 Interpreting servo parameter numbers

The following explains how to read the details of servo parameters.

Item	Explanation	
No.	Indicates the servo parameter No., which can be identified by the servo parameter group and number.	Servo parameter No., symbols, and names are indicated as follows. **[Pr. PA01 Operation mode (**STY)]** Symbol Name No./Detail No.
Symbol	Indicates the abbreviation of the servo parameter. "*" added to abbreviations means the following. *: After the setting, cycle the power, perform a controller reset, or perform a software reset. **: After the setting, cycle the power or perform a software reset.	
Name	Indicates the name of the servo parameter.	
Initial value (unit)	Indicates the servo parameter initial value at factory setting. When there is a unit in the servo parameter, the unit is shown with [ ].	
Setting range	Indicates the setting range of the servo parameter.	
Setting method	For multi axis servo amplifiers, "Common" means that the same setting is applied to each axis. "Each axis" means that the setting for each axis is different. The latest setting value for "Common" is applied to all axes.	
Ver.	Indicates the supported firmware version of the servo amplifier. The servo parameter is available on servo amplifiers with the firmware version or later.	

1.2 Basic setting servo parameters group ([Pr. PA_ _])

[Pr. PA01_Operation mode (**STY)]

Initial value	Setting range	Setting method	Ver.
00003000h	Refer to the relevant detail No.	Each axis	Refer to the relevant detail No.

[Pr. PA01.1_Operation mode selection]

Initial value	Setting range	Ver.
0h	Refer to the text	C4

0: Standard control mode

4: Linear servo motor control mode

6: Direct drive motor control mode

This servo parameter is not available for the MR-J5-_B_-LL servo amplifier.

[Pr. PA01.4_Fully closed loop operation mode selection]

Initial value	Setting range	Ver.
0h	Refer to the text	C4

Select whether to enable or disable the fully closed loop control mode.

The external encoder communication method of four-wire type cannot be used in the fully closed loop control mode on the MR-J5-_B_. In that case, use the MR-J5-_B_-RJ.

When this servo parameter is set to "1" in the linear servo motor control mode or the direct drive motor control mode, [AL. 037 Parameter error] occurs.

Setting "1" (enabled) on the MR-J5W3-_B_ triggers [AL. 037].

0: Disabled (semi closed loop control mode)

1: Enabled (fully closed loop control mode)

This servo parameter is not available for the MR-J5-_B_-LL servo amplifier.

[Pr. PA02_Regenerative option (**REG)]

Initial value	Setting range	Setting method	Ver.
00000000h	Refer to the relevant detail No.	Common	Refer to the relevant detail No.

[Pr. PA02.0-1_Regenerative option selection]

Initial value	Setting range	Ver.
00h	Refer to the text	C4

Select a regenerative option.
Incorrect setting may cause the regenerative option to burn.
If a selected regenerative option is not for use with the servo amplifier, [AL. 037 Parameter error] occurs.
When the FR-XC-(H) or FR-BU2-(H) is used, other regenerative options cannot be used simultaneously.
When constructing a common bus connection using a servo amplifier with a capacity of 12 kW to 25 kW as the main unit, refer to "Common bus connection system using an MR-J5 servo amplifier with a capacity of 12 kW or more as the main unit" in the User's Manual (Hardware).
00: Regenerative option is not used.
- No regenerative resistors are used on servo amplifiers with a capacity of 100 W.
- Built-in regenerative resistors are used on servo amplifiers with a capacity of 0.2 kW to 7 kW.
- The supplied regenerative resistors or regenerative options are used on servo amplifiers with a capacity of 12 kW to 25 kW.

01: FR-XC-(H)/FR-BU2-(H)/servo amplifier sub unit with a capacity of 12 kW to 25 kW (in the common bus connection)
- When using the servo amplifier as the main unit, do not set this parameter to "01".

02: MR-RB032
03: MR-RB12
05: MR-RB30
06: MR-RB50 (A cooling fan is required.)
08: MR-RB31
09: MR-RB51 (A cooling fan is required.)
0B: MR-RB3N
0C: MR-RB5N (A cooling fan is required.)
0D: MR-RB14
0E: MR-RB34
1C: MR-RB3Z
1D: MR-RB5Z (A cooling fan is required.)
80: MR-RB1H-4
81: MR-RB3M-4 (A cooling fan is required.)
82: MR-RB3G-4 (A cooling fan is required.)
83: MR-RB5G-4 (A cooling fan is required.)
84: MR-RB34-4 (A cooling fan is required.)
85: MR-RB54-4 (A cooling fan is required.)
91: MR-RB3U-4 (A cooling fan is required.)
92: MR-RB5U-4 (A cooling fan is required.)
93: MR-RB3Y-4 (A cooling fan is required.)
94: MR-RB5Y-4 (A cooling fan is required.)
FA: The capacity of the regenerative resistors or regenerative options is increased (A cooling fan is used).
- The setting is available only on servo amplifiers with a capacity of 12 kW to 25 kW.

"84", "85", "91", and "92" are available on servo amplifiers with firmware version E0 or later.
"FA" is available on servo amplifiers with firmware version E8 or later.

[Pr. PA02.4_Simple converter selection]

Initial value	Setting range	Ver.
0h	Refer to the text	C4

When using the simple converter, set this servo parameter.
The simple converter and external regenerative option can be used together. When using an external regenerative option, set the regenerative option to be used with [Pr. PA02.0-1].
When [Pr. PA02.0-1 Regenerative option selection] is set to "01" (FR-XC-(H)/FR-BU2-(H)/servo amplifier sub unit with a capacity of 12 kW to 25 kW (in the common bus connection)), setting this servo parameter to "1" (MR-CM3K) or "2" (MR-CM08K1) triggers [AL. 037 Parameter error].
0: Simple converter is not used
1: MR-CM3K
2: MR-CM08K1
• When setting [Pr. PA02.4] to "1" (MR-CM3K)
For servo amplifiers that can be connected to an MR-CM3K, refer to "Combination of MR-CM3K simple converter and servo amplifiers" in the User's Manual (Hardware). Do not set this servo parameter to "1" on an incompatible servo amplifier. When this servo parameter is set to "1" on a 400 V class servo amplifier, [AL. 037] occurs.
• When setting [Pr. PA02.4] to "2" (MR-CM08K1)
The setting value "2" of this servo parameter can be used on servo amplifiers with firmware version F0 or later.
For servo amplifiers that can be connected to an MR-CM08K1, refer to "Combination of MR-CM08K1 simple converter and servo amplifiers" in the User's Manual (Hardware). When this servo parameter is set to "2" on an incompatible servo amplifier, [AL. 037] occurs.
If RDY (in ready-on state) is not set for all the axes of [Pr. PD07 Output device selection 1] to [Pr. PD09 Output device selection 3], [AL. 037] occurs.
When the bus voltage becomes 158 V, [AL. 010.2 Voltage drop in the main circuit power] occurs.
If [Pr. PA01.1 Operation mode selection] is set to "4" (linear servo motor control mode) or "6" (direct drive motor control mode), [AL. 037] occurs.

[Pr. PA02.5_Excessive regeneration warning enabled/disabled selection]

Initial value	Setting range	Ver.
0h	Refer to the text	C4

When [Pr. PA02.4] is set to "0" (simple converter is not used), setting this servo parameter to "1" (disabled) triggers [AL. 037 Parameter error].
When the simple converter is used, whether to enable or disable the detection of [AL. 0E0.1 Excessive regeneration warning] is selectable with this servo parameter.
0: Enabled
1: Disabled

[Pr. PA03_Absolute position detection system (*ABS)]

Initial value	Setting range	Setting method	Ver.
00000000h	Refer to the relevant detail No.	Each axis	Refer to the relevant detail No.

[Pr. PA03.0_Absolute position detection system selection]

Initial value	Setting range	Ver.
0h	Refer to the text	C4

Set this servo parameter when using the absolute position detection system. If the absolute position detection system is switched to the incremental system, the home position is erased. Execute homing again when the absolute position detection system is enabled.

0: Disabled (incremental system)

1: Enabled (absolute position detection system)

In the following case, enabling the absolute position detection system triggers [AL. 037 Parameter error].

- When an incremental type encoder is being used
- When semi closed/fully closed switching is enabled

By setting [Pr. PF63.0 [AL. 01A.5 Servo motor combination error 3] selection] to "1" (disabled) while the absolute position detection system is enabled, an in-use servo motor with a batteryless absolute position encoder can be replaced without changing the setting value of [Pr. PA03.1 Servo motor replacement preparation].

Connecting a servo motor that had not been connected at the startup of the absolute position detection system will cause [AL. 025 Absolute position erased], erasing absolute position data.

Therefore, check if a correct servo motor is connected.

[Pr. PA03.1_Servo motor replacement preparation]

Initial value	Setting range	Ver.
0h	Refer to the text	C4

To replace an in-use batteryless absolute position encoder equipped servo motor while the absolute position detection system is in enabled status, set this servo parameter to "enabled".

Selecting "1" (enabled) enables servo motor replacement. After completing the servo motor replacement preparation, the value automatically changes to "0" (disabled) and the home position is erased.

After replacing the servo motor, execute homing again.

If [AL. 01A.5 Servo motor combination error 3] occurs after servo motor replacement, set this servo parameter to "1" (enabled), cycle the power, and then deactivate [AL. 01A.5].

0: Disabled

1: Enabled

To set this servo parameter to "1" (enabled), refer to "Procedure of replacing a servo motor with battery-less absolute position encoder " in User's Manual (Hardware).

[Pr. PA03.2_Scale measurement encoder replacement preparation]

Initial value	Setting range	Ver.
0h	Refer to the text	C4

To replace an in-use batteryless absolute position scale measurement encoder while the absolute position detection system is in enabled status, set this servo parameter to "enabled".
Selecting "1" (enabled) enables scale measurement encoder replacement. After completing the scale measurement encoder replacement preparation, the value automatically changes to "0" (disabled) and the home position is erased.
After replacing the scale measurement encoder, execute homing again.
After setting this servo parameter to "enabled", cycle the power and then deactivate [AL. 01A.6 Servo motor combination error 4].
0: Disabled
1: Enabled
To set this servo parameter to "1" (enabled), refer to "Procedure for replacing the scale measurement encoder (Mitsubishi Electric servo motor equipped with a batteryless absolute position encoder)" in User's Manual (Function).
This servo parameter is not available for the MR-J5-_B_-LL servo amplifier.

[Pr. PA04_Function selection A-1 (*AOP1)]

Initial value	Setting range	Setting method	Ver.
00002000h	Refer to the relevant detail No.	Common	Refer to the relevant detail No.

[Pr. PA04.2_Servo forced stop selection]

Initial value	Setting range	Ver.
0h	Refer to the text	C4

0: Enabled (the forced stop input EM2 or EM1 is used)
1: Disabled (the forced stop input EM2 and EM1 are not used)

[Pr. PA04.3_Forced stop deceleration function selection]

Initial value	Setting range	Ver.
2h	Refer to the text	C4

0: Forced stop deceleration function disabled (EM1 is used)
2: Forced stop deceleration function enabled (EM2 is used)

[Pr. PA06_Electronic gear numerator (*CMX)]

Initial value	Setting range	Setting method	Ver.
1	1 to 16	Each axis	C4

Set the electronic gear numerator.
Setting a value other than "1" or "16" triggers [AL. 037 Parameter error].
If this servo parameter is set to a value other than "1" while [Pr. PA01.1 Operation mode selection] is set to "4" (linear servo motor control mode), [AL. 037] will occur.
If this servo parameter is set to a value other than "1" while [Pr. PA01.1] is set to "6" (direct drive motor control mode), [AL. 037] will occur.
If the linear scale and A/B/Z-phase differential output type encoder are connected to the load-side encoder and this servo parameter is set to a value other than "1" while [Pr. PA01.4 Fully closed loop operation mode selection] is set to "1" (enabled (fully closed loop control mode)), [AL. 037] will occur.

[Pr. PA07_Electronic gear denominator (*CDV)]

Initial value	Setting range	Setting method	Ver.
1	1 (fixed)	Each axis	C4

The value for the electronic gear denominator is fixed to "1". Setting any value other than "1" will trigger [AL. 037 Parameter error].

[Pr. PA08_Auto tuning mode (ATU)]

Initial value	Setting range	Setting method	Ver.
00000001h	Refer to the relevant detail No.	Each axis	Refer to the relevant detail No.

[Pr. PA08.0_Gain adjustment mode selection]

Initial value	Setting range	Ver.
1h	Refer to the text	C4

Select the gain adjustment mode.

0: 2 gain adjustment mode 1 (interpolation mode)

1: Auto tuning mode 1

2: Auto tuning mode 2

3: Manual mode

4: 2 gain adjustment mode 2

5: Quick tuning mode

6: Load to motor inertia ratio monitor mode

Refer to the following table for details.

Setting value of [Pr. PA08.0]	Gain adjustment mode	Servo parameter adjusted automatically
0	2 gain adjustment mode 1 (interpolation mode)	[Pr. PB06 Load to motor inertia ratio/load to motor mass ratio] [Pr. PB08 Position control gain] [Pr. PB09 Speed control gain] [Pr. PB10 Speed integral compensation]
1	Auto tuning mode 1	[Pr. PB06 Load to motor inertia ratio/load to motor mass ratio] [Pr. PB07 Model control gain] [Pr. PB08 Position control gain] [Pr. PB09 Speed control gain] [Pr. PB10 Speed integral compensation]
2	Auto tuning mode 2	[Pr. PB07 Model control gain] [Pr. PB08 Position control gain] [Pr. PB09 Speed control gain] [Pr. PB10 Speed integral compensation]
3	Manual mode	—
4	2 gain adjustment mode 2	[Pr. PB08 Position control gain] [Pr. PB09 Speed control gain] [Pr. PB10 Speed integral compensation]
5	Quick tuning mode	[Pr. PB07 Model control gain] [Pr. PB08 Position control gain] [Pr. PB09 Speed control gain] [Pr. PB10 Speed integral compensation] [Pr. PB13 Machine resonance suppression filter 1] [Pr. PB14 Notch shape selection 1] [Pr. PB15 Machine resonance suppression filter 2] [Pr. PB16 Notch shape selection 2] [Pr. PB18 Low-pass filter setting] [Pr. PB23 Low-pass filter selection] [Pr. PB50 Machine resonance suppression filter 5] [Pr. PB51 Notch shape selection 5] [Pr. PE41 Function selection E-3]
6	Load to motor inertia ratio monitor mode	[Pr. PB06 Load to motor inertia ratio/load to motor mass ratio]

[Pr. PA08.4_Quick tuning - Load to motor inertia ratio setting]

Initial value	Setting range	Ver.
0h	Refer to the text	C4

Set the load to motor inertia ratio at quick tuning. If the load connected to the servo motor is larger than the load to motor inertia ratio set in the servo parameter, an overshoot may occur in positioning operation after quick tuning.

0: Load to motor inertia ratio of 30 times or less

1: Load to motor inertia ratio of 100 times or less

[Pr. PA08.5_Quick tuning - Execution selection]

Initial value	Setting range	Ver.
0h	Refer to the text	C4

Set when to execute quick tuning.

0: At initial servo-on after cycling the power

1: At every servo-on

[Pr. PA08.6_Quick tuning - Restore selection]

Initial value	Setting range	Ver.
0h	Refer to the text	C4

Set whether to return servo parameters to the values from before quick tuning.

0: Disabled

1: Enabled

By setting "1" (enabled), the following servo parameters return to the values from before quick tuning. If quick tuning has never been performed after power on or software reset, setting "1" (enabled) only keeps the current servo parameter values.

No.	Symbol	Name
PB01	FILT	Adaptive tuning mode (adaptive filter II)
PB07	PG1	Model control gain
PB08	PG2	Position control gain
PB09	VG2	Speed control gain
PB10	VIC	Speed integral compensation
PB11	VDC	Speed differential compensation
PB13	NH1	Machine resonance suppression filter 1
PB14	NHQ1	Notch shape selection 1
PB15	NH2	Machine resonance suppression filter 2
PB16	NHQ2	Notch shape selection 2
PB18	LPF	Low-pass filter setting
PB23	VFBF	Low-pass filter selection
PB50	NH5	Machine resonance suppression filter 5
PB51	NHQ5	Notch shape selection 5
PE41	EOP3	Function selection E-3

[Pr. PA09_Auto tuning response (RSP)]

Initial value	Setting range	Setting method	Ver.
16	Refer to the text	Each axis	C4

Set the auto tuning response.

Setting value	Machine characteristic	
	Responsiveness	Guideline for machine resonance frequency [Hz]
1	Low response	2.7
2		3.6
3		4.9
4		6.6
5		10.0
6		11.3
7		12.7
8		14.3
9		16.1
10		18.1
11		20.4
12		23.0
13		25.9
14		29.2
15		32.9
16		37.0
17		41.7
18		47.0
19		52.9
20	Middle response	59.6
21		67.1
22		75.6
23		85.2
24		95.9
25		108.0
26		121.7
27		137.1
28		154.4
29		173.9
30		195.9
31		220.6
32		248.5
33		279.9
34		315.3
35		355.1
36		400.0
37		446.6
38		501.2
39	High response	571.5
40		642.7

[Pr. PA10_In-position range (INP)]

Initial value	Setting range	Setting method	Ver.
25600 [pulse]	0 to 16777215	Each axis	C4

Set the in-position range in the command pulse unit.

- Selecting an encoder for in-position range control

[Pr. PA01.4 Fully closed loop operation mode selection] setting value	In-position range unit
0 (semi closed loop control mode)	Motor-side encoder
1 (fully closed loop control mode)	Load-side encoder

[Pr. PA14_Travel direction selection (*POL)]

Initial value	Setting range	Setting method	Ver.
0	0 to 1	Each axis	C4

MR-J5_-_B_ (excluding MR-J5-_B_-LL)

The rotation/travel direction can be changed without changing the polarity of the command from the controller.
The polarities of the position and speed information are changed by the setting value of [Pr. PA14 Travel direction selection].
Torque information changes with the combination of [Pr. PA14] and [Pr. PC29.3 Torque POL reflection selection].
The rotation/travel direction is enabled regardless of the control modes. For example, when the torque polarity is changed with [Pr. PA14] and [Pr. PC29.3], the torque information polarity will also change in the position control mode.

- Position information

Setting value of [Pr. PA14]	Servo motor rotation direction/linear servo motor travel direction	
	Positioning address increasing direction	Positioning address decreasing direction
0	CCW or positive direction	CW or negative direction
1	CW or negative direction	CCW or positive direction

- Speed information

Setting value of [Pr. PA14]	Servo motor rotation direction/linear servo motor travel direction	
	Speed handled by the controller: positive	Speed handled by the controller: negative
0	CCW or positive direction	CW or negative direction
1	CW or negative direction	CCW or positive direction

- Torque information (other than continuous operation to torque control mode)

Setting value		Servo motor rotation direction/linear servo motor travel direction	
[Pr. PA14]	[Pr. PC29.3]	Torque handled by the controller: positive	Torque handled by the controller: negative
0	0: Enabled	CCW or positive direction	CW or negative direction
	1: Disabled		
1	0: Enabled	CW or negative direction	CCW or positive direction
	1: Disabled	CCW or positive direction	CW or negative direction

- Torque information (continuous operation to torque control mode)

Setting value		Servo motor rotation direction/linear servo motor travel direction	
[Pr. PA14]	[Pr. PC29.3]	Torque handled by the controller: positive	Torque handled by the controller: negative
0	0: Enabled	CCW or positive direction	CW or negative direction
	1: Disabled		
1	0: Enabled		
	1: Disabled		

The servo motor rotation direction is as follows.

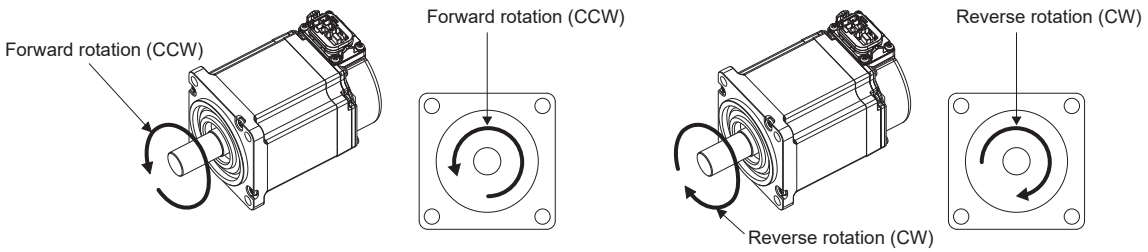

The positive and negative directions of the linear servo motor are as follows.

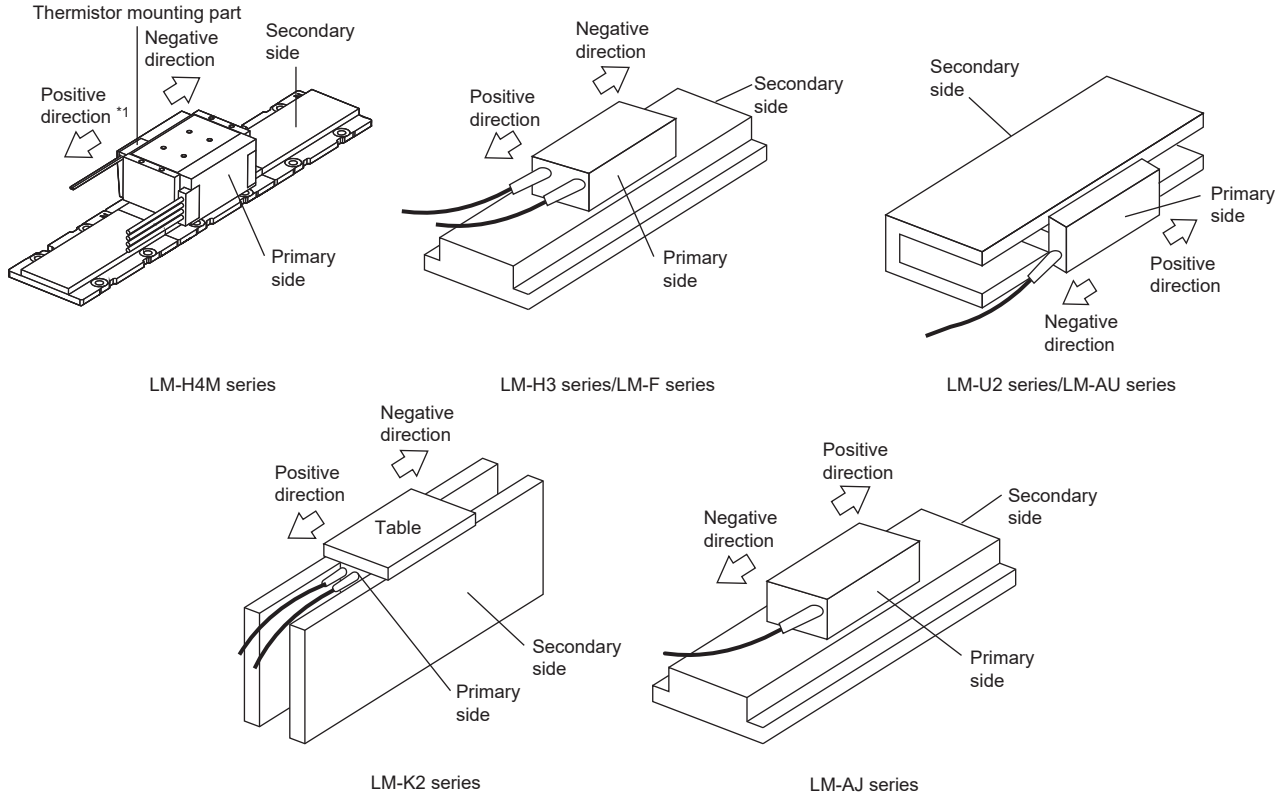

*1 The direction in which the thermistor is mounted is the positive direction.

MR-J5-_B_-LL

The rotation/travel direction can be changed without changing the polarity of the command from the controller.

The polarities of the position and speed information are changed by the setting value of [Pr. PA14 Travel direction selection].

The rotation direction is enabled regardless of the control modes.

- Position information

Setting value of [Pr. PA14]	Servo motor rotation direction	
	Positioning address increasing direction	Positioning address decreasing direction
0	CCW	CW
1	CW	CCW

- Speed information

Setting value of [Pr. PA14]	Servo motor rotation direction	
	Speed handled by the controller: positive	Speed handled by the controller: negative
0	CCW	CW
1	CW	CCW

For the pressure information, refer to the following.

☞ Page 136 [Pr. PW12.1_Selection of pressure increasing direction for positioning address]

The servo motor rotation direction is as follows.

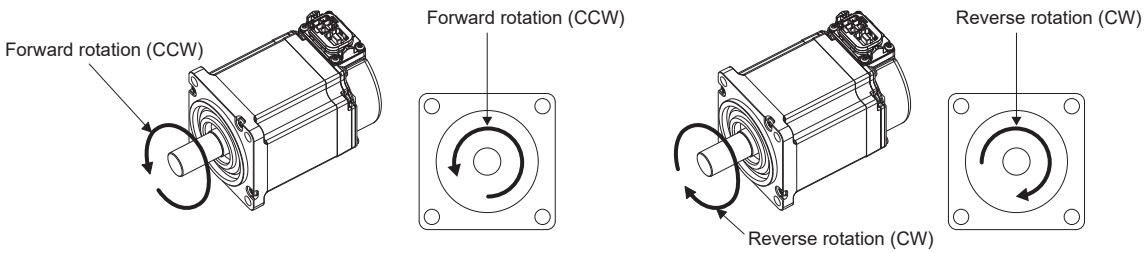

[Pr. PA15_Encoder output pulses (*ENR)]

Initial value	Setting range	Setting method	Ver.
4000 [pulse/rev]	1 to 67108864	Each axis	C4

Set the encoder output pulses output from the servo amplifier, by using the number of output pulses per revolution, dividing ratio, or electronic gear ratio. (after multiplication by 4)

Selecting "1" (dividing ratio setting) in [Pr. PC03.1 Encoder output pulse setting selection] will divide the travel distance [pulse] by the setting value.

Set a numerator for the electronic gear for the A/B-phase pulse output when selecting "3" (A-phase/B-phase pulse electronic gear setting) in [Pr. PC03.1].

The maximum output frequency is 4.6 Mpulses/s. Set the value within the range.

This servo parameter is not available for the MR-J5-_B_-LL servo amplifier.

[Pr. PA16_Encoder output pulses 2 (*ENR2)]

Initial value	Setting range	Setting method	Ver.
1	1 to 67108864	Each axis	C4

Set the electronic gear denominator for the A/B-phase pulse output.

Set a denominator for the electronic gear for when "3" (A-phase/B-phase pulse electronic gear setting) is selected in [Pr. PC03.1 Encoder output pulse setting selection].

When "1" (dividing ratio setting) is selected in [Pr. PC03.1 Encoder output pulse setting selection], the setting value is disabled.

The maximum output frequency is 4.6 Mpulses/s. Set the value within the range.

This servo parameter is not available for the MR-J5-_B_-LL servo amplifier.

[Pr. PA17_Servo motor series setting (**MSR)]

Initial value	Setting range	Setting method	Ver.
00000000h	Refer to the text	Each axis	C4

To select the linear servo motor to be used, set this servo parameter and [Pr. PA18.0-3 Servo motor type setting]. Set this at the same time with [Pr. PA18.0-3]. Refer to the following table for setting values.

This servo parameter is not available for the MR-J5-_B_-LL servo amplifier.

Linear servo motors cannot be used on servo amplifiers with a capacity of 12 kW or more.

Linear servo motor series	Linear servo motor (primary side)	Servo parameter	
		Setting value of [Pr. PA17]	Setting value of [Pr. PA18.0-3]
LM-H3	LM-H3P2A-07P-BSS0	000000BBh	2101h
	LM-H3P3A-12P-CSS0		3101h
	LM-H3P3B-24P-CSS0		3201h
	LM-H3P3C-36P-CSS0		3301h
	LM-H3P3D-48P-CSS0		3401h
	LM-H3P7A-24P-ASS0		7101h
	LM-H3P7B-48P-ASS0		7201h
	LM-H3P7C-72P-ASS0		7301h
	LM-H3P7D-96P-ASS0		7401h
LM-U2	LM-U2PAB-05M-0SS0	000000B4h	A201h
	LM-U2PAD-10M-0SS0		A401h
	LM-U2PAF-15M-0SS0		A601h
	LM-U2PBB-07M-1SS0		B201h
	LM-U2PBD-15M-1SS0		B401h
	LM-U2PBF-22M-1SS0		2601h
	LM-U2P2B-40M-2SS0		2201h
	LM-U2P2C-60M-2SS0		2301h
	LM-U2P2D-80M-2SS0		2401h
LM-F	LM-FP2B-06M-1SS0 (natural cooling)	000000B2h	2201h
	LM-FP2D-12M-1SS0 (natural cooling)		2401h
	LM-FP2F-18M-1SS0 (natural cooling)		2601h
	LM-FP4B-12M-1SS0 (natural cooling)		4201h
	LM-FP4D-24M-1SS0 (natural cooling)		4401h
	LM-FP2B-06M-1SS0 (liquid-cooling)		2202h
	LM-FP2D-12M-1SS0 (liquid-cooling)		2402h
	LM-FP2F-18M-1SS0 (liquid-cooling)		2602h
	LM-FP4B-12M-1SS0 (liquid-cooling)		4202h
	LM-FP4D-24M-1SS0 (liquid-cooling)		4402h
LM-K2	LM-K2P1A-01M-2SS1	000000B8h	1101h
	LM-K2P1C-03M-2SS1		1301h
	LM-K2P2A-02M-1SS1		2101h
	LM-K2P2C-07M-1SS1		2301h
	LM-K2P2E-12M-1SS1		2501h
	LM-K2P3C-14M-1SS1		3301h
	LM-K2P3E-24M-1SS1		3501h

Linear servo motor series	Linear servo motor (primary side)	Servo parameter	
		Setting value of [Pr. PA17]	Setting value of [Pr. PA18.0-3]
LM-H4M *1	LM-H4MP3A-07T-KSS0 (Number of primary-side modules: 1)	00000B01h	3111h
	LM-H4MP3B-14T-KSS0 (Number of primary-side modules: 2)		3121h
	LM-H4MP3C-21T-KSS0 (Number of primary-side modules: 3)		3131h
	LM-H4MP3D-28T-KSS0 (Number of primary-side modules: 4)		3141h
	LM-H4MP3E-36T-KSS0 (Number of primary-side modules: 5)		3151h
	LM-H4MP3F-43T-KSS0 (Number of primary-side modules: 6)		3161h
	LM-H4MP3G-50T-KSS0 (Number of primary-side modules: 7)		3171h
	LM-H4MP3H-57T-KSS0 (Number of primary-side modules: 8)		3181h
LM-AJ *2	LM-AJP1B-07K-JSS0	000000DAh	1201h
	LM-AJP1D-14K-JSS0		1401h
	LM-AJP2B-12S-JSS0		2201h
	LM-AJP2D-23T-JSS0		2401h
	LM-AJP3B-17N-JSS0		3201h
	LM-AJP3D-35R-JSS0		3401h
	LM-AJP4B-22M-JSS0		4201h
	LM-AJP4D-45N-JSS0		4401h
LM-AU *2	LM-AUP3A-03V-JSS0	000000DBh	3102h
	LM-AUP3B-06V-JSS0		3202h
	LM-AUP3C-09V-JSS0		3302h
	LM-AUP3D-11R-JSS0		3402h
	LM-AUP4A-04R-JSS0		4102h
	LM-AUP4B-09R-JSS0		4202h
	LM-AUP4C-13P-JSS0		4302h
	LM-AUP4D-18M-JSS0		4402h
	LM-AUP4F-26P-JSS0		4602h
	LM-AUP4H-35M-JSS0		4802h

*1 Available on servo amplifiers with firmware version F0 or later.
*2 Available on servo amplifiers with firmware version E8 or later.

[Pr. PA18_Servo motor type setting (**MTY)]

Initial value	Setting range	Setting method	Ver.
00000000h	Refer to the relevant detail No.	Each axis	Refer to the relevant detail No.

[Pr. PA18.0-3_Servo motor type setting]

Initial value	Setting range	Ver.
0000h	Refer to the text	C4

When using a linear servo motor, select the linear servo motor to be used with [Pr. PA17 Servo motor series setting] and this servo parameter. Set this at the same time with [Pr. PA17]. Refer to the following for setting values.

☞ Page 26 [Pr. PA17_Servo motor series setting (**MSR)]

This servo parameter is not available for the MR-J5-_B_-LL servo amplifier.

[Pr. PA20_Tough drive setting (*TDS)]

Initial value	Setting range	Setting method	Ver.
00000000h	Refer to the relevant detail No.	Each axis	Refer to the relevant detail No.

[Pr. PA20.1_Vibration tough drive selection]

Initial value	Setting range	Ver.
0h	Refer to the text	C4

0: Disabled
1: Machine resonance suppression filter change mode enabled
2: Machine resonance suppression filter automatic setting mode
Selecting other than "0" for this servo parameter suppresses vibrations by automatically changing the setting values of [Pr. PB13 Machine resonance suppression filter 1] and [Pr. PB15 Machine resonance suppression filter 2] if the vibration exceeds the value of the oscillation level set in [Pr. PF23 Vibration tough drive - Oscillation detection level].
For "1", the vibration tough drive functions when [Pr. PB13] and [Pr. PB15] are enabled. For "2", the vibration tough drive functions even when [Pr. PB13] and [Pr. PB15] are disabled.
When using the vibration tough drive, selecting "2" (machine resonance suppression filter automatic setting mode) is recommended.

[Pr. PA20.2_SEMI-F47 function selection]

Initial value	Setting range	Ver.
0h	Refer to the text	C4

0: Disabled
1: Enabled
Selecting "1" enables to avoid triggering [AL. 010 Undervoltage] by using the electrical energy charged in the capacitor in case that an instantaneous power failure occurs during operation. In [Pr. PF25 SEMI-F47 function - Instantaneous power failure detection time (Instantaneous power failure tough drive detection time)], the time until the occurrence of [AL. 010.1 Voltage drop in the control circuit power] can be set.
For multi axis servo amplifiers, SEMI-F47 function cannot enable specific axis separately. Therefore, when using SEMI-F47 function, enable all axes.
When a common bus connection using a servo amplifier with a capacity of 12 kW to 25 kW as the main unit is constructed, the SEMI-F47 function cannot be used. Set this servo parameter to "0" (disabled). The power may be turned off normally even if this servo parameter is set to "1" (enabled) and [Pr. PF25 SEMI-F47 function - Instantaneous power failure detection time (Instantaneous power failure tough drive detection time)] is set. For details, refer to "Common bus connection system using an MR-J5 servo amplifier with a capacity of 12 kW or more as the main unit" in the User's Manual (Hardware) or "Compliance with SEMI-F47 standard" in the User's Manual (Function).

[Pr. PA21_Function selection A-3 (*AOP3)]

Initial value	Setting range	Setting method	Ver.
00000001h	Refer to the relevant detail No.	Each axis	Refer to the relevant detail No.

[Pr. PA21.0_One-touch tuning function selection]

Initial value	Setting range	Ver.
1h	Refer to the text	C4

0: Disabled

1: Enabled

When the servo parameter is set to "0", the one-touch tuning cannot be performed.

[Pr. PA22_Position control configuration selection (**PCS)]

Initial value	Setting range	Setting method	Ver.
00000000h	Refer to the relevant detail No.	Each axis	Refer to the relevant detail No.

[Pr. PA22.1_Super trace function selection]

Initial value	Setting range	Ver.
0h	Refer to the text	C4

0: Disabled

2: Enabled

This servo parameter is not available for the MR-J5-_B_-LL servo amplifier.

[Pr. PA22.3_Scale measurement function selection]

Initial value	Setting range	Ver.
0h	Refer to the text	C4

The absolute position detection system cannot be used when an incremental type encoder is used. At this time, enabling the absolute position detection system triggers [AL. 037 Parameter error]. In the fully closed loop control mode, setting a value other than "0" triggers [AL. 037].

If the absolute position detection system is disabled or switched to the incremental system, the home position is erased. Setting "1" or "2" on the MR-J5W3-_B_ triggers [AL. 037].

If this servo parameter is set to a value other than "0" while [Pr. PA01.1 Operation mode selection] is set to "0" (standard control mode), [AL. 037] will occur.

0: Disabled

1: Use with absolute position detection system

2: Use with incremental system

By setting [Pr. PF63.1 [AL. 01A.6 Servo motor combination error 4] selection] to "1" (disabled) while the absolute position detection system is enabled, an in-use batteryless absolute position scale measurement encoder can be replaced without changing the setting value of [Pr. PA03.2 Scale measurement encoder replacement preparation].

Connecting a scale measurement encoder that had not been connected at the startup of the absolute position detection system will cause [AL. 025 Absolute position erased], erasing absolute position data.

Therefore, check if a correct scale measurement encoder is connected.

This servo parameter is not available for the MR-J5-_B_-LL servo amplifier.

[Pr. PA23_Drive recorder desired alarm trigger setting (DRAT)]

Initial value	Setting range	Setting method	Ver.
00000000h	Refer to the relevant detail No.	Common	Refer to the relevant detail No.

This servo parameter is enabled in the following conditions:

- [Pr. PF80.0 Drive recorder - Operation mode selection] = "0" (automatic setting mode)
- [Pr. PF80.0] = "1" (manual setting mode) and [Pr. PF82.0 Drive recorder - Trigger mode selection] = "0" (alarm trigger)

Ex.

To activate the drive recorder when [AL. 050 Overload 1] occurs, set "00005000h".

To activate the drive recorder when [AL. 050.3 Thermal overload error 4 during operation] occurs, set this servo parameter to "00005003h".

[Pr. PA23.0-1_Alarm detail number setting]

Initial value	Setting range	Ver.
00h	00h to FFh	C4

Set this to execute the trigger with a desired alarm detail No. for the drive recorder function.

When "00h" is selected, only the desired alarm No. setting will be enabled.

[Pr. PA23.2-4_Alarm number setting]

Initial value	Setting range	Ver.
000h	000h to FFFh	C4

Set this to execute the trigger with a desired alarm No. for the drive recorder function.

When "000h" is selected, the desired alarm trigger of the drive recorder is disabled.

[Pr. PA24_Function selection A-4 (AOP4)]

Initial value	Setting range	Setting method	Ver.
00000000h	Refer to the relevant detail No.	Each axis	Refer to the relevant detail No.

[Pr. PA24.0_Vibration suppression mode selection]

Initial value	Setting range	Ver.
0h	Refer to the text	C4

0: Standard mode
1: 3 inertia mode
2: Low response mode
4: Path tracking mode
When other than "3 inertia mode" is selected, vibration suppression control 2 cannot be used.
Before changing the control mode in "3 inertia mode" or "low response mode", stop the motor.
Before changing the control mode in "path tracking mode", stop the motor.

[Pr. PA25_One-touch tuning - Overshoot permissible level (OTHOV)]

Initial value	Setting range	Setting method	Ver.
0 [%]	0 to 100	Each axis	C4

Set a permissible value of overshoot amount for one-touch tuning as a percentage of the in-position range.
When "0" is set, 50 % is applied.

[Pr. PA26_Function selection A-5 (*AOP5)]

Initial value	Setting range	Setting method	Ver.
00000000h	Refer to the relevant detail No.	Each axis	Refer to the relevant detail No.

[Pr. PA26.0_Torque limit function selection at instantaneous power failure]

Initial value	Setting range	Ver.
0h	Refer to the text	C4

0: Disabled
1: Enabled
By setting "1", if an instantaneous power failure occurs during operation, limiting the torque at acceleration saves the electric energy charged in the capacitor in the servo amplifier. And consequently the time until [AL. 010.2 Voltage drop in the main circuit power] occurs can be delayed with instantaneous power failure tough drive function. Thus, the time to be set in [Pr. PF25 SEMI-F47 function - Instantaneous power failure detection time (Instantaneous power failure tough drive detection time)] can be extended.
The torque limit function at instantaneous power failure is enabled when [Pr. PA20.2 SEMI-F47 function selection] is "1" (enabled).
This function cannot be used on the MR-J5W_-_B_. When this parameter is enabled, [AL. 037 Parameter error] occurs.
This function is disabled in the torque control mode and pressure control mode.

[Pr. PA28_Function selection A-6 (**AOP6)]

Initial value	Setting range	Setting method	Ver.
00000000h	Refer to the relevant detail No.	Each axis	Refer to the relevant detail No.

[Pr. PA28.4_Speed range limit selection]

Initial value	Setting range	Ver.
0h	Refer to the text	C4

Select the speed to be used for the range restriction of the speed data.

If "1" (permissible speed) is set when the servo amplifier is connected with a servo motor of HK series, the maximum speed will be selected.

0: Maximum speed

1: Permissible speed

[Pr. PA34_Quick tuning - Permissible travel distance (QDIS)]

Initial value	Setting range	Setting method	Ver.
0 [0.1 rev], [mm]	0 to 100	Each axis	C4

Set the permissible travel distance for quick tuning.

If the travel distance for quick tuning exceeds the setting value, the quick tuning error occurs.

When "0" is input, the permissible travel distance for quick tuning is 1.0 rev (when a linear servo motor is used, 10 mm).

1.3 Gain/filter setting servo parameters group ([Pr. PB_ _])

[Pr. PB01_Adaptive tuning mode (adaptive filter II) (FILT)]

Initial value	Setting range	Setting method	Ver.
00000000h	Refer to the relevant detail No.	Each axis	Refer to the relevant detail No.

[Pr. PB01.0_Filter tuning mode selection]

Initial value	Setting range	Ver.
0h	Refer to the text	C4

Setting of the adaptive tuning is performed.

Select the adjustment mode of the machine resonance suppression filter 1.

0: Disabled

1: Automatic setting

2: Manual setting

When the servo parameter is set to "automatic setting", [Pr. PB13 Machine resonance suppression filter 1] and [Pr. PB14 Notch shape selection 1] will be set automatically. The automatic setting of machine resonance suppression filter 1 cannot be used if quick tuning is in progress. While quick tuning is in progress, adaptive filter II (adaptive tuning) does not start even if the automatic setting of machine resonance suppression filter 1 is used. The results obtained from the quick tuning are applied to [Pr. PB13] and [Pr. PB14].

Do not use the automatic setting in the torque control mode.

[Pr. PB01.3_Tuning accuracy selection]

Initial value	Setting range	Ver.
0h	Refer to the text	C4

0: Standard

1: High accuracy

In the high accuracy mode, the sound during tuning may be larger than in the standard mode, but the frequency is estimated more accurately.

[Pr. PB02_Vibration suppression control tuning mode (advanced vibration suppression control II) (VRFT)]

Initial value	Setting range	Setting method	Ver.
00000000h	Refer to the relevant detail No.	Each axis	Refer to the relevant detail No.

[Pr. PB02.0_Vibration suppression control 1 - Tuning mode selection]

Initial value	Setting range	Ver.
0h	Refer to the text	C4

Select the tuning mode of the vibration suppression control 1.

0: Disabled

1: Automatic setting

2: Manual setting

[Pr. PB02.1_Vibration suppression control 2 - Tuning mode selection]

Initial value	Setting range	Ver.
0h	Refer to the text	C4

Select the tuning mode of the vibration suppression control 2. To enable the setting value, set [Pr. PA24.0 Vibration suppression mode selection] to "1" (3 inertia mode).

0: Disabled

1: Automatic setting

2: Manual setting

[Pr. PB03_Torque feedback loop gain (TFBGN)]

Initial value	Setting range	Setting method	Ver.
36000 [rad/s]	0 to 36000	Each axis	C4

Set the torque feedback gain.

This function is enabled in the continuous operation to torque control mode.

Decreasing the setting value of this servo parameter reduces the collision load during pressing.

6 rad/s is set when the setting value is 6 rad/s or less.

This servo parameter is not available for the MR-J5-_B_-LL servo amplifier.

[Pr. PB04_Feed forward gain (FFC)]

Initial value	Setting range	Setting method	Ver.
0 [%]	0 to 100	Each axis	C4

Set the feed forward gain.

When "100" is set, the droop pulses are almost 0 in operation at the constant speed. If the super trace control is enabled, the droop pulses are almost 0 in operation at uniform acceleration/deceleration, as well as at the constant speed. However, if sudden acceleration/deceleration is performed, overshoot becomes large. When the feed forward gain is set to 100 %, set a value not smaller than 1 s for the acceleration time constant until the rated speed is reached.

[Pr. PB06_Load to motor inertia ratio/load to motor mass ratio (GD2)]

Initial value	Setting range	Setting method	Ver.
7.00 [Multiplier]	0.00 to 300.00	Each axis	C4

Set the load to motor inertia ratio or load to motor mass ratio. Setting a value different from the actual load moment of inertia or load mass may cause an unexpected operation such as an overshoot.
The setting of this servo parameter will be automatic or manual depending on the setting value of [Pr. PA08.0 Gain adjustment mode selection]. Refer to the following table for details. When the servo parameter is set to automatic setting, the value varies within the range of 0.00 to 100.00.

[Pr. PA08.0 Gain adjustment mode selection]	Servo parameter status
"0" (2 gain adjustment mode 1 (interpolation mode))	Automatic setting
"1" (auto tuning mode 1)	
"2" (auto tuning mode 2)	Manual setting
"3" (manual mode)	
"4" (2 gain adjustment mode 2)	
"5" (quick tuning mode)	
"6" (load to motor inertia ratio monitor mode)	Automatic setting

[Pr. PB07_Model control gain (PG1)]

Initial value	Setting range	Setting method	Ver.
15.0 [rad/s]	1.0 to 8000.0	Each axis	C4

Set the response gain to the target position.
Increasing the setting value improves responsiveness to the position command, but increasing the value too much raises the likelihood of vibration and noise.
The setting of this servo parameter will be automatic or manual depending on the setting value of [Pr. PA08.0 Gain adjustment mode selection]. Refer to the following table for details.

[Pr. PA08.0]	Servo parameter status
"0" (2 gain adjustment mode 1 (interpolation mode))	Manual setting
"1" (auto tuning mode 1)	Automatic setting
"2" (auto tuning mode 2)	
"3" (manual mode)	Manual setting
"4" (2 gain adjustment mode 2)	
"5" (quick tuning mode)	Automatic setting
"6" (load to motor inertia ratio monitor mode)	Manual setting

When the vibration suppression control is enabled, the settable range of [Pr. PB07 Model control gain] is limited. If [Pr. PB07] exceeds the settable range, the vibration suppression control is disabled.

[Pr. PB08_Position control gain (PG2)]

Initial value	Setting range	Setting method	Ver.
37.0 [rad/s]	1.0 to 2000.0	Each axis	C4

Set the gain of the position loop.

Set this servo parameter when increasing the position responsiveness to level load disturbance.

Increasing the setting value improves responsiveness to the load disturbance, but increasing the value too much raises the likelihood of vibration and noise.

The setting of this servo parameter will be automatic or manual depending on the setting value of [Pr. PA08.0 Gain adjustment mode selection]. Refer to the following table for details.

[Pr. PA08.0]	Servo parameter status
"0" (2 gain adjustment mode 1 (interpolation mode))	Automatic setting
"1" (auto tuning mode 1)	
"2" (auto tuning mode 2)	
"3" (manual mode)	Manual setting
"4" (2 gain adjustment mode 2)	Automatic setting
"5" (quick tuning mode)	
"6" (load to motor inertia ratio monitor mode)	Manual setting

[Pr. PB09_Speed control gain (VG2)]

Initial value	Setting range	Setting method	Ver.
823 [rad/s]	20 to 65535	Each axis	C4

Set the gain of the speed loop.

Set this servo parameter when vibration occurs on machines with low rigidity or with large backlash. Increasing the setting value improves responsiveness, but increasing the value too much raises the likelihood of vibration and noise.

The setting of this servo parameter will be automatic or manual depending on the setting value of [Pr. PA08.0 Gain adjustment mode selection]. Refer to the following for details.

☞ Page 36 [Pr. PB08_Position control gain (PG2)]

[Pr. PB10_Speed integral compensation (VIC)]

Initial value	Setting range	Setting method	Ver.
33.7 [ms]	0.1 to 1000.0	Each axis	C4

Set the integral time constant of the speed loop.

Decreasing the setting value improves responsiveness, but raises the likelihood of vibration and noise.

The setting of this servo parameter will be automatic or manual depending on the setting value of [Pr. PA08.0 Gain adjustment mode selection]. Refer to the following for details.

☞ Page 36 [Pr. PB08_Position control gain (PG2)]

[Pr. PB11_Speed differential compensation (VDC)]

Initial value	Setting range	Setting method	Ver.
980	0 to 1000	Each axis	C4

Set the differential compensation.

The enabling conditions vary depending on the setting value in [Pr. PB24.1 PI-PID switching control selection].

[Pr. PB24.1]	The enabling conditions for this servo parameter
"0" (switching is enabled by the PID switching signal from the controller)	Enabled by turning on the PID switching signal from the controller
"3" (Continuous PID control (proportional control) enabled)	Always enabled

[Pr. PB12_Overshoot amount compensation (OVA)]

Initial value	Setting range	Setting method	Ver.
0 [%]	0 to 100	Each axis	C4

Set a dynamic friction torque in percentage to the rated torque at servo motor rated speed. Alternatively, set a percentage of dynamic friction force against the continuous thrust at linear servo motor rated speed.

If the response level is too low or if the torque/thrust is limited, the efficiency of the servo parameter may decrease.

[Pr. PB13_Machine resonance suppression filter 1 (NH1)]

Initial value	Setting range	Setting method	Ver.
4500 [Hz]	10 to 9000	Each axis	C4

Set the notch frequency of the machine resonance suppression filter 1.

When [Pr. PA08.0 Gain adjustment mode selection] is set to "5" (quick tuning mode), the setting value of this servo parameter reflects the adjustment result of quick tuning.

When [Pr. PB01.0 Filter tuning mode selection] is set to "1" (automatic setting), the values obtained from adaptive tuning are applied to the setting value of this servo parameter.

When [Pr. PB01.0] is set to "2" (manual setting), set the notch frequency with this servo parameter.

[Pr. PB14_Notch shape selection 1 (NHQ1)]

Initial value	Setting range	Setting method	Ver.
00000000h	Refer to the relevant detail No.	Each axis	Refer to the relevant detail No.

[Pr. PB14.1_Notch depth selection 1]

Initial value	Setting range	Ver.
0h	Refer to the text	C4

0: -40 dB
1: -14 dB
2: -8 dB
3: -4 dB

[Pr. PB14.2_Notch width selection 1]

Initial value	Setting range	Ver.
0h	Refer to the text	C4

0: α = 2
1: α = 3
2: α = 4
3: α = 5

[Pr. PB15_Machine resonance suppression filter 2 (NH2)]

Initial value	Setting range	Setting method	Ver.
4500 [Hz]	10 to 9000	Each axis	C4

Set the notch frequency of the machine resonance suppression filter 2.
When [Pr. PA08.0 Gain adjustment mode selection] is set to "5" (quick tuning mode), the setting value of this servo parameter reflects the adjustment result of quick tuning.
When [Pr. PB16.0 Machine resonance suppression filter 2 selection] is set to "1" (enabled), set the notch frequency with this servo parameter.

[Pr. PB16_Notch shape selection 2 (NHQ2)]

Initial value	Setting range	Setting method	Ver.
00000000h	Refer to the relevant detail No.	Each axis	Refer to the relevant detail No.

Set forms of the machine resonance suppression filter 2.

When [Pr. PA08.0 Gain adjustment mode selection] is set to "5" (quick tuning mode), the setting value of this servo parameter reflects the adjustment result of quick tuning.

[Pr. PB16.0_Machine resonance suppression filter 2 selection]

Initial value	Setting range	Ver.
0h	Refer to the text	C4

0: Disabled

1: Enabled

[Pr. PB16.1_Notch depth selection]

Initial value	Setting range	Ver.
0h	Refer to the text	C4

0: -40 dB

1: -14 dB

2: -8 dB

3: -4 dB

[Pr. PB16.2_Notch width selection]

Initial value	Setting range	Ver.
0h	Refer to the text	C4

0: α = 2

1: α = 3

2: α = 4

3: α = 5

[Pr. PB17_Shaft resonance suppression filter (NHF)]

Initial value	Setting range	Setting method	Ver.
00000000h	Refer to the relevant detail No.	Each axis	Refer to the relevant detail No.

Set the shaft resonance suppression filter.

Use this to suppress a high-frequency machine vibration.

When [Pr. PB23.0 Shaft resonance suppression filter selection] is set to "0" (automatic setting), the value will be calculated automatically from the servo motor used and load to motor inertia ratio. Automatic setting is not carried out when the linear servo motor is used. When "1" (manual setting) is selected, set the shaft resonance suppression filter with this servo parameter.

When [Pr. PB23.0] is set to "2" (disabled), this servo parameter setting is disabled. As a result, the filter performance may be reduced.

When [Pr. PB49.0 Machine resonance suppression filter 4 selection] is set to "1" (enabled), the shaft resonance suppression filter cannot be used.

[Pr. PB17.0-1_Shaft resonance suppression filter setting - Frequency selection]

Initial value	Setting range	Ver.
00h	Refer to the text	C4

Refer to the following table for setting values.

Set the value closest to the required frequency.

Setting value	Frequency [Hz]
00	Disabled
01	Disabled
02	4500
03	3000
04	2250
05	1800
06	1500
07	1285
08	1125
09	1000
0A	900
0B	818
0C	750
0D	692
0E	642
0F	600
10	562
11	529
12	500
13	473
14	450
15	428
16	409
17	391
18	375
19	360
1A	346
1B	333
1C	321
1D	310
1E	300

Setting value	Frequency [Hz]
1F	290
20	Disabled
21	Disabled
22	Disabled
23	Disabled
24	Disabled
25	Disabled
26	Disabled
27	Disabled
28	4500
29	4000
2A	3600
2B	3272
2C	3000
2D	2769
2E	2571
2F	2400
30	2250
31	2117
32	2000
33	1894
34	1800
35	1714
36	1636
37	1565
38	1500
39	1440
3A	1384
3B	1333
3C	1285
3D	1241
3E	1200
3F	1161
40	1125
41	1090
42	1058
43	1028
44	1000
45	972
46	947
47	923
48	900
49	878
4A	857
4B	837
4C	818
4D	800
4E	782
4F	765
50	750
51	734
52	720
53	705

Setting value	Frequency [Hz]
54	692
55	679
56	666
57	654
58	642
59	631
5A	620
5B	610
5C	600
5D	590
5E	580
5F	571
60	562
61	553
62	545
63	537
64	529
65	521
66	514
67	507
68	500
69	493
6A	486
6B	480
6C	473
6D	467
6E	461
6F	455
70	450
71	444
72	439
73	433
74	428
75	423
76	418
77	413
78	409
79	404
7A	400
7B	395
7C	391
7D	387
7E	382
7F	378
80	375
81	371
82	367
83	363
84	360
85	356
86	352
87	349
88	346

Setting value	Frequency [Hz]
89	342
8A	339
8B	336
8C	333
8D	330
8E	327
8F	324
90	321
91	318
92	315
93	313
94	310
95	307
96	305
97	302
98	300
99	297
9A	295
9B	292
9C	290
9D	288
9E	285
9F	283

[Pr. PB17.2_Notch depth selection]

Initial value	Setting range	Ver.
0h	Refer to the text	C4

0: -40 dB

1: -14 dB

2: -8 dB

3: -4 dB

[Pr. PB18_Low-pass filter setting (LPF)]

Initial value	Setting range	Setting method	Ver.
3141 [rad/s]	100 to 36000	Each axis	C4

Set the low-pass filter.

Refer to the table below for the status of this servo parameter and the setting values of the related servo parameter.

When [Pr. PA08.0 Gain adjustment mode selection] is set to "5" (quick tuning mode), this servo parameter returns to the initial value.

[Pr. PB23.1 Low-pass filter selection]	[Pr. PB18 Low-pass filter setting]
"0" (initial value)	Automatic setting
"1"	Setting value enabled
"2"	Setting value disabled

[Pr. PB19_Vibration suppression control 1 - Vibration frequency (VRF11)]

Initial value	Setting range	Setting method	Ver.
100.0 [Hz]	0.1 to 300.0	Each axis	C4

Set the vibration frequency of vibration suppression control 1 to suppress low-frequency machine vibration.
When "1" (automatic setting) is selected in [Pr. PB02.0 Vibration suppression control 1 - Tuning mode selection], this servo parameter will be set automatically. When "2" (manual setting) is selected, set the vibration frequency with this servo parameter.
If [Pr. PB25.0 Model adaptive control selection] is set to "2" (disabled), the vibration suppression control cannot be used.
The available range of [Pr. PB19 Vibration suppression control 1 - Vibration frequency] depends on the value in [Pr. PB07 Model control gain]. If the setting value of [Pr. PB19] exceeds the available range, the vibration suppression control is disabled.

[Pr. PB20_Vibration suppression control 1 - Resonance frequency (VRF12)]

Initial value	Setting range	Setting method	Ver.
100.0 [Hz]	0.1 to 300.0	Each axis	C4

Set the resonance frequency of vibration suppression control 1 to suppress low-frequency machine vibration.
When "1" (automatic setting) is selected in [Pr. PB02.0 Vibration suppression control 1 - Tuning mode selection], this servo parameter will be set automatically. When "2" (manual setting) is selected, set the resonance frequency with this servo parameter.
If [Pr. PB25.0 Model adaptive control selection] is set to "2" (disabled), the vibration suppression control cannot be used.
The available range of [Pr. PB20 Vibration suppression control 1 - Resonance frequency] changes depending on the value in [Pr. PB07 Model control gain]. If the setting value of [Pr. PB20] exceeds the available range, the vibration suppression control is disabled.

[Pr. PB21_Vibration suppression control 1 - Vibration frequency damping (VRF13)]

Initial value	Setting range	Setting method	Ver.
0.00	0.00 to 0.30	Each axis	C4

Set the damping of the vibration frequency for vibration suppression control 1 to suppress low-frequency machine vibration.
When "1" (automatic setting) is selected in [Pr. PB02.0 Vibration suppression control 1 - Tuning mode selection], this servo parameter will be set automatically. When "2" (manual setting) is selected, set the damping of the vibration frequency with this servo parameter.

[Pr. PB22_Vibration suppression control 1 - Resonance frequency damping (VRF14)]

Initial value	Setting range	Setting method	Ver.
0.00	0.00 to 0.30	Each axis	C4

Set the damping of the resonance frequency for vibration suppression control 1 to suppress low-frequency machine vibration.
When "1" (automatic setting) is selected in [Pr. PB02.0 Vibration suppression control 1 - Tuning mode selection], this servo parameter will be set automatically. When "2" (manual setting) is selected, set the damping of the resonance frequency with this servo parameter.

[Pr. PB23_Low-pass filter selection (VFBF)]

Initial value	Setting range	Setting method	Ver.
00001000h	Refer to the relevant detail No.	Each axis	Refer to the relevant detail No.

[Pr. PB23.0_Shaft resonance suppression filter selection]

Initial value	Setting range	Ver.
0h	Refer to the text	C4

Select the shaft resonance suppression filter.

0: Automatic setting

1: Manual setting

2: Disabled

When [Pr. PB49.0 Machine resonance suppression filter 4 selection] is set to "1" (enabled), the shaft resonance suppression filter cannot be used.

[Pr. PB23.1_Low-pass filter selection]

Initial value	Setting range	Ver.
0h	Refer to the text	C4

Select the low-pass filter.

0: Automatic setting

1: Manual setting

2: Disabled

When "5" (quick tuning mode) is selected in [Pr. PA08.0 Gain adjustment mode selection], this servo parameter is set to "1" (manual setting).

[Pr. PB23.3_Shaft resonance suppression filter 2 selection]

Initial value	Setting range	Ver.
1h	Refer to the text	C4

0: Disabled

1: Automatic setting

[Pr. PB24_Slight vibration suppression control (*MVS)]

Initial value	Setting range	Setting method	Ver.
00000000h	Refer to the relevant detail No.	Each axis	Refer to the relevant detail No.

[Pr. PB24.0_Slight vibration suppression control selection]

Initial value	Setting range	Ver.
0h	Refer to the text	C4

Select the slight vibration suppression control.

0: Disabled

1: Enabled

The slight vibration suppression control is enabled when "3" (manual mode) is selected in [Pr. PA08.0 Gain adjustment mode selection].

The slight vibration suppression control selection can be used in the position control mode.

[Pr. PB24.1_PI-PID switching control selection]

Initial value	Setting range	Ver.
0h	Refer to the text	C4

0: PI control enabled (switching is enabled by the PID switching signal from the controller)

3: Continuous PID control (proportional control) enabled

If the servo motor at a stop is rotated even for a pulse due to any external factor, it generates torque to compensate for a position mismatch. When the servo motor shaft is to be locked mechanically after positioning completion (stop), enabling the PID control and completing positioning simultaneously will suppress the unnecessary torque generated to compensate for a position mismatch.

[Pr. PB25_Function selection B-1 (*BOP1)]

Initial value	Setting range	Setting method	Ver.
00000000h	Refer to the relevant detail No.	Each axis	Refer to the relevant detail No.

[Pr. PB25.0_Model adaptive control selection]

Initial value	Setting range	Ver.
0h	Refer to the text	C4

0: Enabled (model adaptive control)

2: Disabled (PID control)

When "Disabled" is set, vibration suppression control 1 and 2 cannot be used. The overshoot compensation will be disabled.

[Pr. PB26_Gain switching function (*CDP)]

Initial value	Setting range	Setting method	Ver.
00000000h	Refer to the relevant detail No.	Each axis	Refer to the relevant detail No.

Select the gain switching condition.

Set the conditions to enable the following values: the gain switching values that have been set from [Pr. PB29 Gain switching - Load to motor inertia ratio/load to motor mass ratio] to [Pr. PB36 Gain switching - Vibration suppression control 1 - Resonance frequency damping] and from [Pr. PB56 Gain switching - Vibration suppression control 2 - Vibration frequency] to [Pr. PB60 Gain switching - Model control gain], and the values of gain switching 2 that have been set from [Pr. PB67 Gain switching 2 - Load to motor inertia ratio/load to motor mass ratio] to [Pr. PB79 Gain switching 2 - Model control gain].

[Pr. PB26.0_Gain switching selection]

Initial value	Setting range	Ver.
0h	Refer to the text	C4

0: Disabled

1: Control command from the controller

2: Command frequency

3: Droop pulses

4: Servo motor speed

5: Command direction

When "1" is selected, the gain changes to "Gain after gain switching" by the control command from the controller.

[Pr. PB26.1_Gain switching condition selection]

Initial value	Setting range	Ver.
0h	Refer to the text	C4

0: Gain after "Gain switching" is enabled with the condition value or more for gain switching

1: Gain after "Gain switching" is enabled with the condition value or less for gain switching

[Pr. PB26.2_Gain switching time constant - Disabling condition selection]

Initial value	Setting range	Ver.
0h	Refer to the text	C4

0: Switching time constant enabled

1: Time constant disabled at switching

2: Time constant disabled at return

[Pr. PB26.4_Gain switching 2 selection]

Initial value	Setting range	Ver.
0h	Refer to the text	C4

0: Disabled
1: Control command from the controller
2: The same condition as [Pr. PB26.0 Gain switching selection]
When "1" is selected, the gain changes to "Gain after gain switching 2" by the control command from the controller.
When "1" is set in [Pr. PB26.0] while "2" has been selected for this servo parameter, the gain changes to "Gain after gain switching 2" by the control command from the controller.

[Pr. PB26.5_Gain switching selection during a stop]

Initial value	Setting range	Ver.
0h	Refer to the text	C4

0: Gain switching 2 during a stop is disabled
1: Gain switching 2 during a stop is enabled
This servo parameter is enabled in the following condition: [Pr. PB26.4 Gain switching 2 selection] is set to "2" (the same condition as [Pr. PB26.0 Gain switching selection]) and [Pr. PB26.0] is set to "5" (command direction) in the position control mode.

[Pr. PB27_Gain switching condition (CDL)]

Initial value	Setting range	Setting method	Ver.
10 [Refer to the text below for the unit.]	0 to 16777215	Each axis	C4

Set the value of the gain switching (command frequency, droop pulses, or servo motor speed) selected in [Pr. PB26 Gain switching function].
The set value unit differs depending on the switching condition item. The units are as follows: [kpulse/s] for command frequency, [pulse] for droop pulses, and [r/min] for servo motor speed.
If using a linear servo motor, the unit of the servo motor speed is [mm/s].

[Pr. PB28_Gain switching time constant (CDT)]

Initial value	Setting range	Setting method	Ver.
1 [ms]	0 to 100	Each axis	C4

Set the time constant until the gain switches in response to the conditions set in [Pr. PB26 Gain switching function] and [Pr. PB27 Gain switching condition].

[Pr. PB29_Gain switching - Load to motor inertia ratio/load to motor mass ratio (GD2B)]

Initial value	Setting range	Setting method	Ver.
7.00 [Multiplier]	0.00 to 300.00	Each axis	C4

Set the load to motor inertia ratio/load to motor mass ratio for when gain switching is enabled.
The setting value of this servo parameter is enabled when [Pr. PA08.0 Gain adjustment mode selection] is set to "3" (manual mode).

[Pr. PB30_Gain switching - Position control gain (PG2B)]

Initial value	Setting range	Setting method	Ver.
0.0 [rad/s]	0.0 to 2000.0	Each axis	C4

Set the position control gain for when the gain switching is enabled.
When the setting value of this servo parameter is less than "1.0", the setting value of [Pr. PB08 Position control gain] is applied.
The setting value of this servo parameter is enabled when [Pr. PA08.0 Gain adjustment mode selection] is set to "3" (manual mode).

[Pr. PB31_Gain switching - Speed control gain (VG2B)]

Initial value	Setting range	Setting method	Ver.
0 [rad/s]	0 to 65535	Each axis	C4

Set the speed control gain for when the gain switching is enabled.
When the setting value of this servo parameter is less than "20", the setting value of [Pr. PB09 Speed control gain] is applied.
The setting value of this servo parameter is enabled when [Pr. PA08.0 Gain adjustment mode selection] is set to "3" (manual mode).

[Pr. PB32_Gain switching - Speed integral compensation (VICB)]

Initial value	Setting range	Setting method	Ver.
0.0 [ms]	0.0 to 5000.0	Each axis	C4

Set the speed integral compensation for when the gain switching is enabled.
When the setting value of this servo parameter is less than "0.1", the setting value of [Pr. PB10 Speed integral compensation] is applied.
The setting value of this servo parameter is enabled when [Pr. PA08.0 Gain adjustment mode selection] is set to "3" (manual mode).

[Pr. PB33_Gain switching - Vibration suppression control 1 - Vibration frequency (VRF11B)]

Initial value	Setting range	Setting method	Ver.
0.0 [Hz]	0.0 to 300.0	Each axis	C4

Set the vibration frequency of vibration suppression control 1 for when the gain switching is enabled.
When the setting value of this servo parameter is less than "0.1", the setting value of [Pr. PB19 Vibration suppression control 1 - Vibration frequency] is applied.
This servo parameter is enabled in the following conditions:

- [Pr. PA08.0 Gain adjustment mode selection] is set to "3" (manual mode).
- [Pr. PB02.0 Vibration suppression control 1 - Tuning mode selection] is set to "2" (manual setting).
- "1" (control command from the controller) is selected in [Pr. PB26.0 Gain switching selection].

Switching gains during driving may cause a shock. Switch the gains after the servo motor has stopped.

[Pr. PB34_Gain switching - Vibration suppression control 1 - Resonance frequency (VRF12B)]

Initial value	Setting range	Setting method	Ver.
0.0 [Hz]	0.0 to 300.0	Each axis	C4

Set the resonance frequency for vibration suppression control 1 for when the gain switching is enabled.

When the setting value of this servo parameter is less than "0.1", the setting value of [Pr. PB20 Vibration suppression control 1 - Resonance frequency] is applied.

This servo parameter is enabled in the following conditions:

- [Pr. PA08.0 Gain adjustment mode selection] is set to "3" (manual mode).
- [Pr. PB02.0 Vibration suppression control 1 - Tuning mode selection] is set to "2" (manual setting).
- "1" (control command from the controller) is selected in [Pr. PB26.0 Gain switching selection].

Switching gains during driving may cause a shock. Switch the gains after the servo motor has stopped.

[Pr. PB35_Gain switching - Vibration suppression control 1 - Vibration frequency damping (VRF13B)]

Initial value	Setting range	Setting method	Ver.
0.00	0.00 to 0.30	Each axis	C4

Set the damping of the vibration frequency for vibration suppression control 1 for when the gain switching is enabled.

This servo parameter is enabled in the following conditions:

- [Pr. PA08.0 Gain adjustment mode selection] is set to "3" (manual mode).
- [Pr. PB02.0 Vibration suppression control 1 - Tuning mode selection] is set to "2" (manual setting).
- "1" (control command from the controller) is selected in [Pr. PB26.0 Gain switching selection].

Switching gains during driving may cause a shock. Switch the gains after the servo motor has stopped.

[Pr. PB36_Gain switching - Vibration suppression control 1 - Resonance frequency damping (VRF14B)]

Initial value	Setting range	Setting method	Ver.
0.00	0.00 to 0.30	Each axis	C4

Set the damping of the resonance frequency for vibration suppression control 1 for when the gain switching is enabled.

This servo parameter is enabled in the following conditions:

- [Pr. PA08.0 Gain adjustment mode selection] is set to "3" (manual mode).
- [Pr. PB02.0 Vibration suppression control 1 - Tuning mode selection] is set to "2" (manual setting).
- "1" (control command from the controller) is selected in [Pr. PB26.0 Gain switching selection].

Switching gains during driving may cause a shock. Switch the gains after the servo motor has stopped.

[Pr. PB45_Command notch filter (CNHF)]

Initial value	Setting range	Setting method	Ver.
00000000h	Refer to the relevant detail No.	Each axis	Refer to the relevant detail No.

Set the command notch filter.

[Pr. PB45.0-1_Command notch filter setting frequency selection]

Initial value	Setting range	Ver.
00h	Refer to the text	C4

Refer to the following table for the relation of setting values to frequencies.

Setting value	Frequency [Hz]
00	Disabled
01	2000
02	1000
03	666
04	500
06	400
07	333
08	285
09	250
0A	222
0B	200
0C	181
0D	166
0F	153
10	142
11	133
12	125
13	117
14	111
15	105
16	100
17	95
19	90
1A	86
1B	83
1C	80
1D	76
1E	74
1F	71
21	66
22	62
23	58
24	55
25	52
26	50
27	47
29	45
2A	43
2B	41
2C	40
2D	38

Setting value	Frequency [Hz]
2E	37
2F	35
30	34.5
31	33.3
32	31.3
33	29.4
34	27.8
35	26.3
36	25.0
38	23.8
39	22.7
3A	21.7
3B	20.8
3C	20.0
3D	19.2
3E	18.5
3F	17.9
40	17.2
41	16.7
42	15.6
43	14.7
44	13.9
45	13.2
46	12.5
48	11.9
49	11.4
4A	10.9
4B	10.4
4C	10
4D	9.6
4E	9.3
4F	8.9
50	8.6
51	8.3
52	7.8
53	7.4
54	6.9
55	6.6
56	6.3
58	6.0
59	5.7
5A	5.4
5B	5.2
5C	5.0
5D	4.8
5E	4.6
5F	4.5
60	4.31
61	4.17
62	3.91
63	3.68
64	3.47
65	3.29

Setting value	Frequency [Hz]
66	3.13
68	2.98
69	2.84
6A	2.72
6B	2.60
6C	2.50
6D	2.40
6E	2.31
6F	2.23
71	2.08
72	1.95
73	1.84
74	1.74
75	1.64
76	1.56
78	1.49
79	1.42
7A	1.36
7B	1.30
7C	1.25
7D	1.20
7E	1.16
7F	1.12

[Pr. PB45.2_Notch depth selection]

Initial value	Setting range	Ver.
0h	Refer to the text	C4

Refer to the following table for details.

Setting value	Depth [dB]
0	-40.0
1	-24.1
2	-18.1
3	-14.5
4	-12.0
5	-10.1
6	-8.5
7	-7.2
8	-6.0
9	-5.0
A	-4.1
B	-3.3
C	-2.5
D	-1.8
E	-1.2
F	-0.6

[Pr. PB46_Machine resonance suppression filter 3 (NH3)]

Initial value	Setting range	Setting method	Ver.
4500 [Hz]	10 to 9000	Each axis	C4

Set the notch frequency of the machine resonance suppression filter 3.

When [Pr. PB47.0 Machine resonance suppression filter 3 selection] is set to "1" (enabled), set the notch frequency with this servo parameter.

[Pr. PB47_Notch shape selection 3 (NHQ3)]

Initial value	Setting range	Setting method	Ver.
00000000h	Refer to the relevant detail No.	Each axis	Refer to the relevant detail No.

Set forms of the machine resonance suppression filter 3.

[Pr. PB47.0_Machine resonance suppression filter 3 selection]

Initial value	Setting range	Ver.
0h	Refer to the text	C4

0: Disabled

1: Enabled

[Pr. PB47.1_Notch depth selection]

Initial value	Setting range	Ver.
0h	Refer to the text	C4

0: -40 dB

1: -14 dB

2: -8 dB

3: -4 dB

[Pr. PB47.2_Notch width selection]

Initial value	Setting range	Ver.
0h	Refer to the text	C4

0: α = 2

1: α = 3

2: α = 4

3: α = 5

[Pr. PB48_Machine resonance suppression filter 4 (NH4)]

Initial value	Setting range	Setting method	Ver.
4500 [Hz]	10 to 9000	Each axis	C4

Set the notch frequency of the machine resonance suppression filter 4.

When [Pr. PB49.0 Machine resonance suppression filter 4 selection] is set to "1" (enabled), set the notch frequency with this servo parameter.

[Pr. PB49_Notch shape selection 4 (NHQ4)]

Initial value	Setting range	Setting method	Ver.
00000000h	Refer to the relevant detail No.	Each axis	Refer to the relevant detail No.

Set forms of the machine resonance suppression filter 4.

[Pr. PB49.0_Machine resonance suppression filter 4 selection]

Initial value	Setting range	Ver.
0h	Refer to the text	C4

0: Disabled

1: Enabled

When this setting value is "Enabled", [Pr. PB17 Shaft resonance suppression filter] cannot be used.

[Pr. PB49.1_Notch depth selection]

Initial value	Setting range	Ver.
0h	Refer to the text	C4

0: -40 dB

1: -14 dB

2: -8 dB

3: -4 dB

[Pr. PB49.2_Notch width selection]

Initial value	Setting range	Ver.
0h	Refer to the text	C4

0: α = 2

1: α = 3

2: α = 4

3: α = 5

[Pr. PB50_Machine resonance suppression filter 5 (NH5)]

Initial value	Setting range	Setting method	Ver.
4500 [Hz]	10 to 9000	Each axis	C4

Set the notch frequency of the machine resonance suppression filter 5.

When [Pr. PB51.0 Machine resonance suppression filter 5 selection] is set to "1" (enabled), set the notch frequency with this servo parameter.

[Pr. PB51_Notch shape selection 5 (NHQ5)]

Initial value	Setting range	Setting method	Ver.
00000000h	Refer to the relevant detail No.	Each axis	Refer to the relevant detail No.

Set forms of the machine resonance suppression filter 5.

When [Pr. PA08.0 Gain adjustment mode selection] is set to "5" (quick tuning mode), the setting value of this servo parameter reflects the adjustment result of quick tuning.

When [Pr. PE41.0 Robust filter selection] is set to "1" (enabled), machine resonance suppression filter 5 cannot be used.

[Pr. PB51.0_Machine resonance suppression filter 5 selection]

Initial value	Setting range	Ver.
0h	Refer to the text	C4

0: Disabled

1: Enabled

[Pr. PB51.1_Notch depth selection]

Initial value	Setting range	Ver.
0h	Refer to the text	C4

0: -40 dB

1: -14 dB

2: -8 dB

3: -4 dB

[Pr. PB51.2_Notch width selection]

Initial value	Setting range	Ver.
0h	Refer to the text	C4

0: α = 2

1: α = 3

2: α = 4

3: α = 5

[Pr. PB52_Vibration suppression control 2 - Vibration frequency (VRF21)]

Initial value	Setting range	Setting method	Ver.
100.0 [Hz]	0.1 to 300.0	Each axis	C4

Set the vibration frequency of vibration suppression control 2 to suppress low-frequency machine vibration.
When "1" (automatic setting) is selected in [Pr. PB02.1 Vibration suppression control 2 - Tuning mode selection], this servo parameter will be set automatically. When "2" (manual setting) is selected, set the vibration frequency with this servo parameter.
The setting value is enabled when [Pr. PA24.0 Vibration suppression mode selection] is set to "1" (3 inertia mode).
The available range of [Pr. PB52 Vibration suppression control 2 - Vibration frequency] depends on the value in [Pr. PB07 Model control gain]. If the setting value of [Pr. PB52] exceeds the available range, the vibration suppression control is disabled.

[Pr. PB53_Vibration suppression control 2 - Resonance frequency (VRF22)]

Initial value	Setting range	Setting method	Ver.
100.0 [Hz]	0.1 to 300.0	Each axis	C4

Set the resonance frequency of vibration suppression control 2 to suppress low-frequency machine vibration.
When "1" (automatic setting) is selected in [Pr. PB02.1 Vibration suppression control 2 - Tuning mode selection], this servo parameter will be set automatically. When "2" (manual setting) is selected, set the resonance frequency with this servo parameter.
The setting value is enabled when [Pr. PA24.0 Vibration suppression mode selection] is set to "1" (3 inertia mode).
The available range of [Pr. PB53 Vibration suppression control 2 - Resonance frequency] changes depending on the value in [Pr. PB07 Model control gain]. If the setting value of [Pr. PB53] exceeds the available range, the vibration suppression control is disabled.

[Pr. PB54_Vibration suppression control 2 - Vibration frequency damping (VRF23)]

Initial value	Setting range	Setting method	Ver.
0.00	0.00 to 0.30	Each axis	C4

Set the damping of the vibration frequency for vibration suppression control 2 to suppress low-frequency machine vibration.
When "1" (automatic setting) is selected in [Pr. PB02.1 Vibration suppression control 2 - Tuning mode selection], this servo parameter will be set automatically. When "2" (manual setting) is selected, set the damping of the vibration frequency with this servo parameter.
The setting value is enabled when [Pr. PA24.0 Vibration suppression mode selection] is set to "1" (3 inertia mode).

[Pr. PB55_Vibration suppression control 2 - Resonance frequency damping (VRF24)]

Initial value	Setting range	Setting method	Ver.
0.00	0.00 to 0.30	Each axis	C4

Set the damping of the resonance frequency for vibration suppression control 2 to suppress low-frequency machine vibration.
When "1" (automatic setting) is selected in [Pr. PB02.1 Vibration suppression control 2 - Tuning mode selection], this servo parameter will be set automatically. When "2" (manual setting) is selected, set the damping of the resonance frequency with this servo parameter.
The setting value is enabled when [Pr. PA24.0 Vibration suppression mode selection] is set to "1" (3 inertia mode).

[Pr. PB56_Gain switching - Vibration suppression control 2 - Vibration frequency (VRF21B)]

Initial value	Setting range	Setting method	Ver.
0.0 [Hz]	0.0 to 300.0	Each axis	C4

Set the vibration frequency of vibration suppression control 2 for when the gain switching is enabled.

When the setting value of this servo parameter is less than "0.1", the setting value of [Pr. PB52 Vibration suppression control 2 - Vibration frequency] is applied.

This servo parameter is enabled in the following conditions:

- [Pr. PA08.0 Gain adjustment mode selection] is set to "3" (manual mode).
- [Pr. PA24.0 Vibration suppression mode selection] is set to "1" (3 inertia mode).
- [Pr. PB02.1 Vibration suppression control 2 - Tuning mode selection] is set to "2" (manual setting).
- "1" (control command from the controller) is selected in [Pr. PB26.0 Gain switching selection].

Switching gains during driving may cause a shock. Switch the gains after the servo motor has stopped.

[Pr. PB57_Gain switching - Vibration suppression control 2 - Resonance frequency (VRF22B)]

Initial value	Setting range	Setting method	Ver.
0.0 [Hz]	0.0 to 300.0	Each axis	C4

Set the resonance frequency for vibration suppression control 2 for when the gain switching is enabled.

When the setting value of this servo parameter is less than "0.1", the setting value of [Pr. PB53 Vibration suppression control 2 - Resonance frequency] is applied.

This servo parameter is enabled in the following conditions:

- [Pr. PA08.0 Gain adjustment mode selection] is set to "3" (manual mode).
- [Pr. PA24.0 Vibration suppression mode selection] is set to "1" (3 inertia mode).
- [Pr. PB02.1 Vibration suppression control 2 - Tuning mode selection] is set to "2" (manual setting).
- "1" (control command from the controller) is selected in [Pr. PB26.0 Gain switching selection].

Switching gains during driving may cause a shock. Switch the gains after the servo motor has stopped.

[Pr. PB58_Gain switching - Vibration suppression control 2 - Vibration frequency damping (VRF23B)]

Initial value	Setting range	Setting method	Ver.
0.00	0.00 to 0.30	Each axis	C4

Set the damping of the vibration frequency for vibration suppression control 2 for when the gain switching is enabled.

This servo parameter is enabled in the following conditions:

- [Pr. PA08.0 Gain adjustment mode selection] is set to "3" (manual mode).
- [Pr. PA24.0 Vibration suppression mode selection] is set to "1" (3 inertia mode).
- [Pr. PB02.1 Vibration suppression control 2 - Tuning mode selection] is set to "2" (manual setting).
- "1" (control command from the controller) is selected in [Pr. PB26.0 Gain switching selection].

Switching gains during driving may cause a shock. Switch the gains after the servo motor has stopped.

[Pr. PB59_Gain switching - Vibration suppression control 2 - Resonance frequency damping (VRF24B)]

Initial value	Setting range	Setting method	Ver.
0.00	0.00 to 0.30	Each axis	C4

Set the damping of the resonance frequency for vibration suppression control 2 for when the gain switching is enabled.
This servo parameter is enabled in the following conditions:

- [Pr. PA08.0 Gain adjustment mode selection] is set to "3" (manual mode).
- [Pr. PA24.0 Vibration suppression mode selection] is set to "1" (3 inertia mode).
- [Pr. PB02.1 Vibration suppression control 2 - Tuning mode selection] is set to "2" (manual setting).
- "1" (control command from the controller) is selected in [Pr. PB26.0 Gain switching selection].

[Pr. PB60_Gain switching - Model control gain (PG1B)]

Initial value	Setting range	Setting method	Ver.
0.0 [rad/s]	0.0 to 8000.0	Each axis	C4

Set the model control gain for when the gain switching is enabled.
When the setting value of this servo parameter is less than "1.0", the setting value of [Pr. PB07 Model control gain] is applied.
This servo parameter is enabled in the following conditions:

- [Pr. PA08.0 Gain adjustment mode selection] is set to "3" (manual mode).
- "1" (control command from the controller) is selected in [Pr. PB26.0 Gain switching selection].

Switching gains during driving may cause a shock. Switch the gains after the servo motor has stopped.

[Pr. PB65_Gain switching 2 condition (CDL2)]

Initial value	Setting range	Setting method	Ver.
10 [Refer to the text below for the unit.]	0 to 16777215	Each axis	C4

Set the value of the gain switching (command frequency, droop pulses, or servo motor speed) selected in [Pr. PB26.0 Gain switching selection].
The set value unit differs depending on the switching condition item. The units are as follows: [kpulse/s] for command frequency, [pulse] for droop pulses, and [r/min] for servo motor speed.
If using a linear servo motor, the unit of the servo motor speed is [mm/s].
The setting value is to be larger than in [Pr. PB27 Gain switching condition].
When the setting value of this servo parameter is "0", the gain is not switched to the gain switching 2.

[Pr. PB66_Gain switching 2 time constant (CDT2)]

Initial value	Setting range	Setting method	Ver.
1 [ms]	0 to 100	Each axis	C4

Set the time constant until the gain switches from "gain at normal use" or "gain at switching" to "gain at switching 2" in response to the conditions set in [Pr. PB26 Gain switching function] and [Pr. PB65 Gain switching 2 condition].

[Pr. PB67_Gain switching 2 - Load to motor inertia ratio/load to motor mass ratio (GD2C)]

Initial value	Setting range	Setting method	Ver.
7.00 [Multiplier]	0.00 to 300.00	Each axis	C4

Set the load to motor inertia ratio/load to motor mass ratio for when the gain switching 2 is enabled.
This servo parameter is enabled when [Pr. PA08.0 Gain adjustment mode selection] is set to "3" (manual mode).

[Pr. PB68_Gain switching 2 - Position control gain (PG2C)]

Initial value	Setting range	Setting method	Ver.
0.0 [rad/s]	0.0 to 2000.0	Each axis	C4

Set the position control gain for when the gain switching 2 is enabled.
When the setting value of this servo parameter is less than "1.0", the setting value of [Pr. PB08 Position control gain] is applied.
This servo parameter is enabled when [Pr. PA08.0 Gain adjustment mode selection] is set to "3" (manual mode).

[Pr. PB69_Gain switching 2 - Speed control gain (VG2C)]

Initial value	Setting range	Setting method	Ver.
0 [rad/s]	0 to 65535	Each axis	C4

Set the speed control gain for when the gain switching 2 is enabled.
When the setting value of this servo parameter is less than "20", the setting value of [Pr. PB09 Speed control gain] is applied.
This servo parameter is enabled when [Pr. PA08.0 Gain adjustment mode selection] is set to "3" (manual mode).

[Pr. PB70_Gain switching 2 - Speed integral compensation (VICC)]

Initial value	Setting range	Setting method	Ver.
0.0 [ms]	0.0 to 5000.0	Each axis	C4

Set the speed integral compensation for when the gain switching 2 is enabled.
When the setting value of this servo parameter is less than "0.1", the setting value of [Pr. PB10 Speed integral compensation] is applied.
This servo parameter is enabled when [Pr. PA08.0 Gain adjustment mode selection] is set to "3" (manual mode).

[Pr. PB71_Gain switching 2 - Vibration suppression control 1 - Vibration frequency (VRF11C)]

Initial value	Setting range	Setting method	Ver.
0.0 [Hz]	0.0 to 300.0	Each axis	C4

Set the vibration frequency of vibration suppression control 1 for when the gain switching 2 is enabled.

When the setting value of this servo parameter is less than "0.1", the setting value of [Pr. PB19 Vibration suppression control 1 - Vibration frequency] is applied.

This servo parameter is enabled in the following conditions:

- [Pr. PA08.0 Gain adjustment mode selection] is set to "3" (manual mode).
- [Pr. PB02.0 Vibration suppression control 1 - Tuning mode selection] is set to "2" (manual setting).
- [Pr. PB26.0 Gain switching selection] is set to "1" (control command from the controller) while [Pr. PB26.4 Gain switching 2 selection] is set to "2" (the same condition as [Pr. PB26.0 Gain switching selection]). Alternatively, "1" (control command from the controller) is selected in [Pr. PB26.4].

Switching gains during driving may cause a shock. Switch the gains after the servo motor has stopped.

[Pr. PB72_Gain switching 2 - Vibration suppression control 1 - Resonance frequency (VRF12C)]

Initial value	Setting range	Setting method	Ver.
0.0 [Hz]	0.0 to 300.0	Each axis	C4

Set the resonance frequency for vibration suppression control 1 for when the gain switching 2 is enabled.

When the setting value of this servo parameter is less than "0.1", the setting value of [Pr. PB20 Vibration suppression control 1 - Resonance frequency] is applied.

This servo parameter is enabled in the following conditions:

- [Pr. PA08.0 Gain adjustment mode selection] is set to "3" (manual mode).
- [Pr. PB02.0 Vibration suppression control 1 - Tuning mode selection] is set to "2" (manual setting).
- [Pr. PB26.0 Gain switching selection] is set to "1" (control command from the controller) while [Pr. PB26.4 Gain switching 2 selection] is set to "2" (the same condition as [Pr. PB26.0 Gain switching selection]). Alternatively, "1" (control command from the controller) is selected in [Pr. PB26.4].

Switching gains during driving may cause a shock. Switch the gains after the servo motor has stopped.

[Pr. PB73_Gain switching 2 - Vibration suppression control 1 - Vibration frequency damping (VRF13C)]

Initial value	Setting range	Setting method	Ver.
0.00	0.00 to 0.30	Each axis	C4

Set the damping of the vibration frequency for vibration suppression control 1 for when the gain switching is enabled.

This servo parameter is enabled in the following conditions:

- [Pr. PA08.0 Gain adjustment mode selection] is set to "3" (manual mode).
- [Pr. PB02.0 Vibration suppression control 1 - Tuning mode selection] is set to "2" (manual setting).
- [Pr. PB26.0 Gain switching selection] is set to "1" (control command from the controller) while [Pr. PB26.4 Gain switching 2 selection] is set to "2" (the same condition as [Pr. PB26.0 Gain switching selection]). Alternatively, "1" (control command from the controller) is selected in [Pr. PB26.4].

Switching gains during driving may cause a shock. Switch the gains after the servo motor has stopped.

[Pr. PB74_Gain switching 2 - Vibration suppression control 1 - Resonance frequency damping (VRF14C)]

Initial value	Setting range	Setting method	Ver.
0.00	0.00 to 0.30	Each axis	C4

Set the damping of the resonance frequency for vibration suppression control 1 for when the gain switching is enabled.

This servo parameter is enabled in the following conditions:

- [Pr. PA08.0 Gain adjustment mode selection] is set to "3" (manual mode).
- [Pr. PB02.0 Vibration suppression control 1 - Tuning mode selection] is set to "2" (manual setting).
- [Pr. PB26.0 Gain switching selection] is set to "1" (control command from the controller) while [Pr. PB26.4 Gain switching 2 selection] is set to "2" (the same condition as [Pr. PB26.0 Gain switching selection]). Alternatively, "1" (control command from the controller) is selected in [Pr. PB26.4].

Switching gains during driving may cause a shock. Switch the gains after the servo motor has stopped.

[Pr. PB75_Gain switching 2 - Vibration suppression control 2 - Vibration frequency (VRF21C)]

Initial value	Setting range	Setting method	Ver.
0.0 [Hz]	0.0 to 300.0	Each axis	C4

Set the vibration frequency of vibration suppression control 2 for when the gain switching is enabled.

When the setting value of this servo parameter is less than "0.1", the setting value of [Pr. PB52 Vibration suppression control 2 - Vibration frequency] is applied.

This servo parameter is enabled in the following conditions:

- [Pr. PA08.0 Gain adjustment mode selection] is set to "3" (manual mode).
- [Pr. PA24.0 Vibration suppression mode selection] is set to "1" (3 inertia mode).
- [Pr. PB02.1 Vibration suppression control 2 - Tuning mode selection] is set to "2" (manual setting).
- [Pr. PB26.0 Gain switching selection] is set to "1" (control command from the controller) while [Pr. PB26.4 Gain switching 2 selection] is set to "2" (the same condition as [Pr. PB26.0 Gain switching selection]). Alternatively, "1" (control command from the controller) is selected in [Pr. PB26.4].

Switching gains during driving may cause a shock. Switch the gains after the servo motor has stopped.

[Pr. PB76_Gain switching 2 - Vibration suppression control 2 - Resonance frequency (VRF22C)]

Initial value	Setting range	Setting method	Ver.
0.0 [Hz]	0.0 to 300.0	Each axis	C4

Set the resonance frequency for vibration suppression control 2 for when the gain switching is enabled.

When the setting value of this servo parameter is less than "0.1", the setting value of [Pr. PB53 Vibration suppression control 2 - Resonance frequency] is applied.

This servo parameter is enabled in the following conditions:

- [Pr. PA08.0 Gain adjustment mode selection] is set to "3" (manual mode).
- [Pr. PA24.0 Vibration suppression mode selection] is set to "1" (3 inertia mode).
- [Pr. PB02.1 Vibration suppression control 2 - Tuning mode selection] is set to "2" (manual setting).
- [Pr. PB26.0 Gain switching selection] is set to "1" (control command from the controller) while [Pr. PB26.4 Gain switching 2 selection] is set to "2" (the same condition as [Pr. PB26.0 Gain switching selection]). Alternatively, "1" (control command from the controller) is selected in [Pr. PB26.4].

Switching gains during driving may cause a shock. Switch the gains after the servo motor has stopped.

[Pr. PB77_Gain switching 2 - Vibration suppression control 2 - Vibration frequency damping (VRF23C)]

Initial value	Setting range	Setting method	Ver.
0.00	0.00 to 0.30	Each axis	C4

Set the damping of the vibration frequency for vibration suppression control 2 for when the gain switching is enabled.

This servo parameter is enabled in the following conditions:

- [Pr. PA08.0 Gain adjustment mode selection] is set to "3" (manual mode).
- [Pr. PA24.0 Vibration suppression mode selection] is set to "1" (3 inertia mode).
- [Pr. PB02.1 Vibration suppression control 2 - Tuning mode selection] is set to "2" (manual setting).
- [Pr. PB26.0 Gain switching selection] is set to "1" (control command from the controller) while [Pr. PB26.4 Gain switching 2 selection] is set to "2" (the same condition as [Pr. PB26.0 Gain switching selection]). Alternatively, "1" (control command from the controller) is selected in [Pr. PB26.4].

Switching gains during driving may cause a shock. Switch the gains after the servo motor has stopped.

[Pr. PB78_Gain switching 2 - Vibration suppression control 2 - Resonance frequency damping (VRF24C)]

Initial value	Setting range	Setting method	Ver.
0.00	0.00 to 0.30	Each axis	C4

Set the damping of the resonance frequency for vibration suppression control 2 for when the gain switching is enabled.

This servo parameter is enabled in the following conditions:

- [Pr. PA08.0 Gain adjustment mode selection] is set to "3" (manual mode).
- [Pr. PA24.0 Vibration suppression mode selection] is set to "1" (3 inertia mode).
- [Pr. PB02.1 Vibration suppression control 2 - Tuning mode selection] is set to "2" (manual setting).
- [Pr. PB26.0 Gain switching selection] is set to "1" (control command from the controller) while [Pr. PB26.4 Gain switching 2 selection] is set to "2" (the same condition as [Pr. PB26.0 Gain switching selection]). Alternatively, "1" (control command from the controller) is selected in [Pr. PB26.4].

Switching gains during driving may cause a shock. Switch the gains after the servo motor has stopped.

[Pr. PB79_Gain switching 2 - Model control gain (PG1C)]

Initial value	Setting range	Setting method	Ver.
0.0 [rad/s]	0.0 to 8000.0	Each axis	C4

Set the model control gain for when the gain switching is enabled.

When the setting value of this servo parameter is less than "1.0", the setting value of [Pr. PB07 Model control gain] is applied.

This servo parameter is enabled in the following conditions:

- [Pr. PB26.0 Gain switching selection] is set to "1" (control command from the controller) while [Pr. PB26.4 Gain switching 2 selection] is set to "2" (the same condition as [Pr. PB26.0 Gain switching selection]). Alternatively, "1" (control command from the controller) is selected in [Pr. PB26.4].

[Pr. PB81_Command filter (*CFIL)]

Initial value	Setting range	Setting method	Ver.
00000001h	Refer to the relevant detail No.	Each axis	Refer to the relevant detail No.

[Pr. PB81.4_Position command smoothing filter]

Initial value	Setting range	Ver.
0h	Refer to the text	C4

This function can be used only in position control mode.

This filter and [Pr. PB45 Command notch filter] are mutually exclusive. "1" (enabled) can be set in this function only when [Pr. PB45.0-1 Command notch filter setting frequency selection] is set to "00" (disabled). When a setting value other than "00" (disabled) is set in [Pr. PB45.0-1], the filter is disabled regardless of the setting value.

0: Disabled

1: Enabled

When "1" (enabled) is selected, set the filter time constant with [Pr. PB82 Position command smoothing filter time constant].

[Pr. PB82_Position command smoothing filter time constant (PFT)]

Initial value	Setting range	Setting method	Ver.
0.0 [ms]	0.0 to 100.0	Each axis	C4

Set the position command smoothing filter time constant.

This servo parameter can be used when [Pr. PB81.4 Position command smoothing filter] is set to "1" (enabled).

1.4 Extension setting servo parameters group ([Pr. PC_ _])

[Pr. PC01_Excessive error alarm trigger level (ERZ)]

Initial value	Setting range	Setting method	Ver.
0 [rev], [mm]	0 to 1000	Each axis	C4

Set an excessive error alarm trigger level.

If using a rotary servo motor or direct drive motor, set the level in units of rev. If 200 rev or higher is set, the value will be clamped to 200 rev.

If using a linear servo motor, set the level in units of mm.

When the value is set to "0", the alarm trigger level for rotary servo motors and direct drive motors is 3 rev. The alarm trigger level for linear servo motors is 100 mm.

The unit can be changed with [Pr. PC06.3 Excessive error alarm trigger level/excessive error warning trigger level - Unit selection].

[Pr. PC02_Electromagnetic brake sequence output (MBR)]

Initial value	Setting range	Setting method	Ver.
0 [ms]	0 to 1000	Each axis	C4

Set the delay time used between the MBR (Electromagnetic brake interlock) shut-off and the base circuit shut-off.

[Pr. PC03_Encoder output pulses selection (*ENRS)]

Initial value	Setting range	Setting method	Ver.
00000000h	Refer to the relevant detail No.	Each axis	Refer to the relevant detail No.

[Pr. PC03.0_Encoder output pulse - Phase selection]

Initial value	Setting range	Ver.
0h	Refer to the text	C4

0: Increasing A-phase 90° in CCW or positive direction

1: Increasing A-phase 90° in CW or negative direction

Setting value	Servo motor rotation direction/linear servo motor travel direction	
	CCW or positive direction	CW or negative direction
0	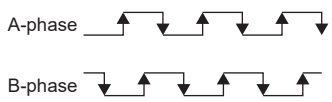	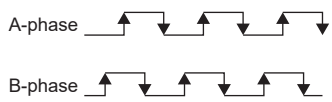
1	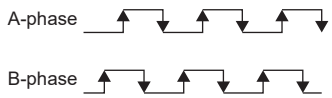	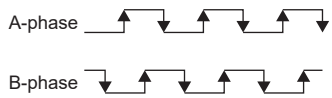

This servo parameter is not available for the MR-J5-_B_-LL servo amplifier.

[Pr. PC03.1_Encoder output pulse setting selection]

Initial value	Setting range	Ver.
0h	Refer to the text	C4

Select the encoder output pulse setting.

This servo parameter cannot be set for C-axis.

If this servo parameter is set to "0" while [Pr. PC03.2 Encoder selection for encoder output pulse] is set to "1", [AL. 037 Parameter error] occurs.

When an encoder other than an A/B/Z-phase differential output type encoder is connected, setting this servo parameter to "4" causes [AL. 037] to occur.

0: Output pulse setting

1: Dividing ratio setting

3: A-phase/B-phase pulse electronic gear setting

4: A/B-phase pulse through output setting

This servo parameter is not available for the MR-J5-_B_-LL servo amplifier.

■Settings of [Pr. PC03.1] and [Pr. PC03.2]

- When [Pr. PC03.2] = "0" (servo motor-side encoder)

Setting value of [Pr. PC03.1]	For rotary servo motors and direct drive motors	For linear servo motors
"0" (output pulse setting)	Set the output pulses per revolution with [Pr. PA15 Encoder output pulses]. If [Pr. PC03.2] is set to "1" (load-side encoder), [AL. 037] will occur. Output pulse = Setting value of [Pr. PA15] [pulse/rev]	The output pulse setting cannot be used. When "0" is set, the condition is the same as when "1" is set.
"1" (dividing ratio setting)	Set the dividing ratio relative to the resolution per servo motor revolution with [Pr. PA15]. $\text{Output pulse} = \frac{\text{Resolution per revolution}}{\text{Setting value of [Pr. PA15]}}$ [pulse/rev]	Set the dividing ratio relative to the travel distance of the linear servo motor with [Pr. PA15]. $\text{Output pulse} = \frac{\text{Travel distance of linear servo motor}}{\text{Setting value of [Pr. PA15]}}$ [pulse]
"3" (A-phase/B-phase pulse electronic gear setting)	Set the A-phase/B-phase pulse electronic gear with [Pr. PA15] and [Pr. PA16 Encoder output pulses 2]. $\text{Output pulse} = \text{Resolution per revolution} \times \frac{\text{Setting value of [Pr. PA15]}}{\text{Setting value of [Pr. PA16]}}$ [pulse/rev]	Set the A-phase/B-phase pulse electronic gear with [Pr. PA15] and [Pr. PA16 Encoder output pulses 2]. $\text{Output pulse} = \text{Travel distance of linear servo motor} \times \frac{\text{Setting value of [Pr. PA15]}}{\text{Setting value of [Pr. PA16]}}$ [pulse]
"4" (A/B-phase pulse through output setting) *1	• A/B-phase pulses are output when an A/B/Z-phase differential output type encoder is used. If a different encoder is connected, [AL. 037] occurs. • The setting value in [Pr. PC03.0 Encoder output pulse - Phase selection] is not applied. • The setting values in [Pr. PA15] and [Pr. PA16] are not applied. Output pulse = A/B-phase pulse of A/B/Z-phase differential output type encoder [pulse]	• A/B-phase pulses are output when an A/B/Z-phase differential output type encoder is used. If a different encoder is connected, [AL. 037] occurs. • The setting value in [Pr. PC03.0 Encoder output pulse - Phase selection] is not applied. • The setting values in [Pr. PA15] and [Pr. PA16] are not applied. Output pulse = A/B-phase pulse of A/B/Z-phase differential output type encoder [pulse]

*1 If this value is set when using the rotary servo motor, [AL. 037] occurs.

• When [Pr. PC03.2] = "1" (load-side encoder)

Setting value of [Pr. PC03.1]	When in the fully closed loop control mode	When the scale measurement function is enabled
"0" (output pulse setting)	[AL. 037] occurs.	
"1" (dividing ratio setting)	Set the dividing ratio relative to the resolution per servo motor revolution with [Pr. PA15]. Output pulse = $\frac{\text{Resolution per revolution}}{\text{Setting value of [Pr. PA15]}}$ [pulse/rev]	Set the dividing ratio relative to the travel distance of the scale measurement encoder with [Pr. PA15]. Output pulse = $\frac{\text{Travel distance of scale measurement encoder}}{\text{Setting value of [Pr. PA15]}}$ [pulse]
"3" (A-phase/B-phase pulse electronic gear setting)	Set the A-phase/B-phase pulse electronic gear with [Pr. PA15] and [Pr. PA16]. Output pulse = Resolution per revolution × $\frac{\text{Setting value of [Pr. PA15]}}{\text{Setting value of [Pr. PA16]}}$ [pulse/rev]	Set the A-phase/B-phase pulse electronic gear with [Pr. PA15] and [Pr. PA16]. Output pulse = Travel distance of scale measurement encoder × $\frac{\text{Setting value of [Pr. PA15]}}{\text{Setting value of [Pr. PA16]}}$ [pulse]
"4" (A/B-phase pulse through output setting)	• A/B-phase pulses are output when an A/B/Z-phase differential output type encoder is used. If a different encoder is connected, [AL. 037] occurs. • The setting value in [Pr. PC03.0 Encoder output pulse - Phase selection] is not applied. • The setting values in [Pr. PA15] and [Pr. PA16] are not applied. Output pulse = A/B-phase pulse of A/B/Z-phase differential output type encoder [pulse]	• A/B-phase pulses are output when an A/B/Z-phase differential output type encoder is used. If a different encoder is connected, [AL. 037] occurs. • A/B/Z-phase differential output type encoders cannot be used in the linear servo motor control mode or the direct drive motor control mode. • The setting value in [Pr. PC03.0 Encoder output pulse - Phase selection] is not applied. • The setting values in [Pr. PA15] and [Pr. PA16] are not applied. Output pulse = A/B-phase pulse of A/B/Z-phase differential output type encoder [pulse]

[Pr. PC03.2_Encoder selection for encoder output pulse]

Initial value	Setting range	Ver.
0h	Refer to the text	C4

Select the encoder that the servo amplifier will use to output encoder output pulses.

This servo parameter can be used only in a fully closed loop system.

If "1" is selected for systems other than a fully closed loop system or a semi closed loop system (scale measurement function enabled), [AL. 037 Parameter error] occurs.

This servo parameter cannot be set for the C-axis of multi-axis servo amplifiers.

For the settings, refer to the table for [Pr. PC03.1].

☞ Page 66 [Pr. PC03.1_Encoder output pulse setting selection]

0: Servo motor-side encoder

1: Load-side encoder

This servo parameter is not available for the MR-J5-_B_-LL servo amplifier.

[Pr. PC04_Function selection C-1 (**COP1)]

Initial value	Setting range	Setting method	Ver.
00000000h	Refer to the relevant detail No.	Each axis	Refer to the relevant detail No.

[Pr. PC04.3_Encoder cable communication method selection]

Initial value	Setting range	Ver.
0h	Refer to the text	C4

0: Two-wire type

1: Four-wire type

When using an A/B/Z-phase differential output type encoder, set "0". Setting "1" triggers [AL. 037 Parameter error].

If the value is set incorrectly, [AL. 016 Encoder initial communication error 1] or [AL. 020 Encoder normal communication error 1] occurs.

[AL. 037] occurs if this servo parameter is set to "1" while [Pr. PA01.4 Fully closed loop operation mode selection] is set to "1" (enabled (fully closed loop control mode)) on servo amplifiers other than the MR-J5-_B_-RJ.

[Pr. PC05_Function selection C-2 (**COP2)]

Initial value	Setting range	Setting method	Ver.
00000000h	Refer to the relevant detail No.	Each axis	Refer to the relevant detail No.

[Pr. PC05.0_Motor-less operation selection]

Initial value	Setting range	Ver.
0h	Refer to the text	C4

Enable or disable motor-less operation. This operation can be used only in semi closed loop control while a rotary servo motor is used.

0: Disabled

1: Enabled

[Pr. PC05.4_Encoder communication circuit diagnosis mode selection]

Initial value	Setting range	Ver.
0h	Refer to the text	C4

Enable or disable the encoder communication circuit diagnosis mode.

[AL. 118.1 Encoder communication circuit diagnosis in progress] occurs during the encoder communication circuit diagnosis mode.

0: Encoder communication circuit diagnosis mode disabled

1: Encoder communication circuit diagnosis mode enabled

[Pr. PC06_Function selection C-3 (*COP3)]

Initial value	Setting range	Setting method	Ver.
00000000h	Refer to the relevant detail No.	Each axis	Refer to the relevant detail No.

[Pr. PC06.3_Excessive error alarm trigger level/excessive error warning trigger level - Unit selection]

Initial value	Setting range	Ver.
0h	Refer to the text	C4

Select the unit used when setting the excessive error alarm trigger level in [Pr. PC01 Excessive error alarm trigger level] and setting the excessive error warning trigger level in [Pr. PC38 Excessive error warning trigger level].

This servo parameter is enabled only in the position control mode.

0: [rev] or [mm]

1: [0.1 rev] or [0.1 mm]

2: [0.01 rev] or [0.01 mm]

3: [0.001 rev] or [0.001 mm]

[Pr. PC07_Zero speed (ZSP)]

Initial value	Setting range	Setting method	Ver.
50 [r/min], [mm/s]	0 to 10000	Each axis	C4

Set an output range of the zero speed signal (ZSP).

The zero speed signal detection has a hysteresis of 20 [r/min] (20 [mm/s]).

[Pr. PC08_Overspeed alarm detection level (OSL)]

Initial value	Setting range	Setting method	Ver.
0 [r/min], [mm/s]	0 to 20000	Each axis	C4

Set an overspeed alarm detection level.

When a value exceeding "servo motor maximum speed × 120 %" is set, the value will be clamped at "servo motor maximum speed × 120 %".

When "0" is set, the value of "servo motor maximum speed × 120 %" will be set.

When HK series servo motor is connected, the value of "servo motor maximum speed × 105 %" will be set.

[Pr. PC09_Analog monitor 1 output (MOD1)]

Initial value	Setting range	Setting method	Ver.
00000000h	Refer to the relevant detail No.	Common	Refer to the relevant detail No.

[Pr. PC09.0-1_Analog monitor 1 output selection]

Initial value	Setting range	Ver.
00h	Refer to the text	C4

Select the signal to be output to analog monitor 1. For multi axis servo amplifiers, this servo parameter setting is disabled.

Setting value	Explanation	Semi closed loop system *1			Fully closed loop system *1
		Rotary	Linear	DD	Rotary
00	Servo motor speed (±8 V/max. speed)	○	○	○	○
01	Torque or thrust (±8 V/max. torque or max. thrust)	○	○	○	○
02	Servo motor speed (+8 V/max. speed)	○	○	○	○
03	Torque or thrust (+8 V/max. torque or max. thrust)	○	○	○	○
04	Current command (±8 V/max. current command)	○	○	○	○
05	Speed command (±8 V/max. speed)	○	○	○	○
06	Servo motor-side droop pulses (±10 V/100 pulses) *2	○	○	○	○
07	Servo motor-side droop pulses (±10 V/1000 pulses) *2	○	○	○	○
08	Servo motor-side droop pulses (±10 V/10000 pulses) *2	○	○	○	○
09	Servo motor-side droop pulses (±10 V/100000 pulses) *2	○	○	○	○
0D	Bus voltage (200 V class: +8 V/400 V, 400 V class: +8 V/800 V)	○	○	○	○
0E	Speed command 2 (±8 V/max. speed)	○	○	○	○
10	Load-side droop pulses (±10 V/100 pulses) *2	—	—	—	○
11	Load-side droop pulses (±10 V/1000 pulses) *2	—	—	—	○
12	Load-side droop pulses (±10 V/10000 pulses) *2	—	—	—	○
13	Load-side droop pulses (±10 V/100000 pulses) *2	—	—	—	○
14	Load-side droop pulses (±10 V/1 Mpulses) *2	—	—	—	○
15	Motor/load side position deviation (±10 V/100000 pulses)	—	—	—	○
16	Motor/load side speed deviation (±8 V/max. speed)	—	—	—	○
17	Internal temperature of encoder (±10 V/±128 °C)	○	—	○	○
18	Servo motor-side droop pulses (±10 V/1 Mpulses) *2	○	○	○	○
1C	Pressure command (±10 V/Setting value of [Pr. PW22]) *3	○	—	—	—
1D	Pressure feedback voltage (±10 V/Pressure feedback voltage (±11 V)) *3*4	○	—	—	—
1E	Analog monitor input 1 voltage (±10 V/Analog monitor input 1 voltage (±11 V)) *3*5	○	—	—	—
1F	Analog monitor input 2 voltage (±10 V/Analog monitor input 2 voltage (±11 V)) *3*6	○	—	—	—

*1 Items with are available for each operation mode.
Rotary: When rotary servo motors are used.
Linear: When linear servo motors are used.
DD: When direct drive motors are used.
*2 This is in the units of encoder pulses.
*3 Available only on the MR-J5-_B_-LL servo amplifier. The MR-J5_-_B_ servo amplifier outputs "0".
*4 The result adjusted by [Pr. PW21 Pressure control feedback offset] is output.
*5 The result adjusted by [Pr. PW23 Analog monitor input 1 offset] is output.
*6 The result adjusted by [Pr. PW25 Analog monitor input 2 offset] is output.

[Pr. PC10_Analog monitor 2 output (MOD2)]

Initial value	Setting range	Setting method	Ver.
00000001h	Refer to the relevant detail No.	Common	Refer to the relevant detail No.

[Pr. PC10.0-1_Analog monitor 2 output selection]

Initial value	Setting range	Ver.
01h	Refer to the text	C4

Select the signal to be output to analog monitor 2. For multi axis servo amplifiers, this servo parameter setting is disabled.
Refer to the following for setting values.
☞ Page 70 [Pr. PC09_Analog monitor 1 output (MOD1)]

[Pr. PC11_Analog monitor 1 offset (MO1)]

Initial value	Setting range	Setting method	Ver.
0 [mV]	-999 to 999	Common	C4

Set the offset voltage of MO1 (Analog monitor 1).

[Pr. PC12_Analog monitor 2 offset (MO2)]

Initial value	Setting range	Setting method	Ver.
0 [mV]	-999 to 999	Common	C4

Set the offset voltage of MO2 (Analog monitor 2).

[Pr. PC17_Function selection C-4 (**COP4)]

Initial value	Setting range	Setting method	Ver.
00000000h	Refer to the relevant detail No.	Each axis	Refer to the relevant detail No.

[Pr. PC17.0_Homing condition selection]

Initial value	Setting range	Ver.
0h	0h to 2h	C4

0: Z-phase of the servo motor must be passed after the power supply is switched on.
1: Z-phase of the servo motor does not need to be passed after the power supply is switched on.
When using an incremental type linear encoder, A/B/Z-phase differential output type linear encoder, and A/B/Z-phase differential output rotary encoder, set "0". Setting "1" triggers [AL. 037 Parameter error].
If [Pr. PA03.0 Absolute position detection system selection] is set to "0" (disabled) while a direct drive motor manufactured by Mitsubishi Electric is connected and a value of "1" is set, [AL. 037] will occur.

[Pr. PC17.1_Linear encoder multipoint Z-phase input function selection]

Initial value	Setting range	Ver.
0h	Refer to the text	C4

When multiple reference marks exist during the full stroke of the linear encoder, set "1".
0: Disabled
1: Enabled
This servo parameter is not available for the MR-J5-_B_-LL servo amplifier.

[Pr. PC18_Function selection C-5 (*COP5)]

Initial value	Setting range	Setting method	Ver.
00000000h	00000000h to 00001100h	Common	Refer to the relevant detail No.

[Pr. PC18.3_[AL. 0E9 Main circuit off warning] selection]

Initial value	Setting range	Ver.
0h	0h to 1h	C4

0: Detect using the ready-on command and servo-on command

1: Detect using only the servo-on command

[Pr. PC19_Function selection C-6 (*COP6)]

Initial value	Setting range	Setting method	Ver.
00000000h	Refer to the relevant detail No.	Each axis	Refer to the relevant detail No.

[Pr. PC19.4_Output open-phase detection selection]

Initial value	Setting range	Ver.
0h	Refer to the text	C4

Enable or disable the detection of output open-phase detection function.

0: Disabled

1: Enabled ([Pr. PC96 Output open-phase detection time] disabled)

2: Enabled ([Pr. PC96 Output open-phase detection time] enabled)

When "2" (enabled ([Pr. PC96 Output open-phase detection time] enabled)) is set, the setting value of [Pr. PC96 Output open-phase detection time] is the detection time of [AL. 139 Open-phase error].

[Pr. PC19.6_Output open phase - Judgment speed selection]

Initial value	Setting range	Ver.
0h	Refer to the text	C4

0: Servo motor speed

1: Speed command

When "0" (servo motor speed) is set, the value of the servo motor speed is used for the speed judgment of the output open-phase detection.

When "1" (speed command) is set, the speed command value is used for the speed judgment of the output open-phase detection.

When "2" (disabled (PID control)) is set in [Pr. PB25.0 Model adaptive control selection] in the torque control mode or the pressure control mode, setting "1" (speed command) in this servo parameter does not trigger [AL. 139.2 Output open-phase error]. Set this parameter to "0" (servo motor speed).

[Pr. PC20_Function selection C-7 (*COP7)]

Initial value	Setting range	Setting method	Ver.
00000000h	Refer to the relevant detail No.	Common	Refer to the relevant detail No.

[Pr. PC20.2_Undervoltage alarm selection]

Initial value	Setting range	Ver.
0h	Refer to the text	C4

Select the alarm or warning that occurs when the bus voltage drops to the undervoltage alarm trigger level.

0: [AL. 010 Undervoltage] occurs regardless of the servo motor speed.

1: [AL. 0E9 Main circuit off warning] occurs when the servo motor speed is 50 r/min (50 mm/s) or less, and [AL. 010] occurs when over 50 r/min (50 mm/s).

[Pr. PC20.4_Input open-phase detection selection]

Initial value	Setting range	Ver.
0h	Refer to the text	C4

Enable or disable the detection of input open-phase detection function.

0: Automatic

1: Warning enabled

2: Alarm enabled

3: Disabled

When "0" (automatic) is set, the input open-phase detection function is enabled or disabled depending on the capacity or power supply input of the servo amplifier. Details are as follows.

Servo amplifier	Servo amplifier main circuit input voltage	Servo amplifier capacity	Input open-phase detection function
MR-J5-_B_	3-phase AC	2 kW or less	Warning disabled/alarm disabled
	1-phase AC Main circuit DC	2 kW or less	Warning disabled/alarm disabled
	3-phase AC	3.5 kW or more	Warning enabled/alarm disabled
	Main circuit DC	3.5 kW or more	Warning disabled/alarm disabled
MR-J5W_-_B_	3-phase AC	0.75 kW or less	Warning disabled/alarm disabled
	1-phase AC Main circuit DC	0.75 kW or less	Warning disabled/alarm disabled
	3-phase AC	1 kW or more	Warning enabled/alarm disabled
	Main circuit DC	1 kW or more	Warning disabled/alarm disabled
MR-J5-_B4_	3-phase AC	3.5 kW or less	Warning enabled/alarm disabled

When "0" (automatic) is set, if the main circuit power supply (L1/L2/L3) is input to the servo amplifier with [Pr. PA02.4 Simple converter selection] set to a value other than "0" (not using a simple converter), [AL. 1E9 Open-phase warning] is triggered by the input open-phase detection function.

[Pr. PC21_Alarm history clear (*BPS)]

Initial value	Setting range	Setting method	Ver.
00000000h	Refer to the relevant detail No.	Each axis	Refer to the relevant detail No.

[Pr. PC21.0_Alarm clear history selection]

Initial value	Setting range	Ver.
0h	Refer to the text	C4

0: Disabled

1: Enabled

When "1" (enabled) is selected, the alarm history will be cleared at either the next power cycle, at software reset, or at controller reset. After the alarm history is cleared, "0" (disabled) will be set to this servo parameter automatically.

[Pr. PC24_Deceleration time constant at forced stop (RSBR)]

Initial value	Setting range	Setting method	Ver.
100 [ms]	0 to 20000	Each axis	C4

Set the deceleration time constant for the forced stop deceleration function.

Set the time taken from the rated speed to 0 [r/min] (0 [mm/s]) in units of ms.

When "0" is set, the deceleration time constant is the same as when "100" is set.

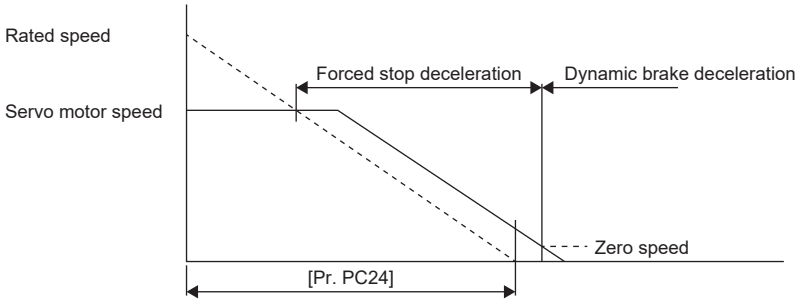

- If the servo motor torque or thrust is saturated at the maximum value during forced stop deceleration because the set time is too short, the time to stop the servo motor will be longer than the set time constant.
- [AL. 050 Overload 1] or [AL. 051 Overload 2] may occur during forced stop deceleration, depending on the set value.
- After an occurrence of an alarm to execute forced stop deceleration, if another alarm that does not execute forced stop deceleration occurs, or if the control circuit power supply is shut off, dynamic braking will start regardless of the deceleration time constant setting.
- Set a longer time than deceleration time at quick stop of the controller. If the setting time is too short, [AL. 052 Excessive error] may occur.
- During forced stop deceleration, changes in the setting value are not reflected. If the setting value is changed during forced stop deceleration, the change will be reflected after the deceleration is completed.

[Pr. PC26_Function selection C-8 (**COP8)]

Initial value	Setting range	Setting method	Ver.
00000050h	Refer to the relevant detail No.	Each axis	Refer to the relevant detail No.

[Pr. PC26.3_Load-side encoder cable communication method selection]

Initial value	Setting range	Ver.
0h	Refer to the text	C4

0: Two-wire type

1: Four-wire type

When using a load-side encoder that is A/B/Z-phase differential output type, set "0". Setting "1" triggers [AL. 037 Parameter error].

If the value is set incorrectly, [AL. 070 Load-side encoder initial communication error 1] or [AL. 071 Load-side encoder normal communication error 1] occurs.

Setting "1" on servo amplifiers other than the MR-J5-_B_-RJ triggers [AL. 037].

This servo parameter is not available for the MR-J5-_B_-LL servo amplifier.

[Pr. PC27_Function selection C-9 (**COP9)]

Initial value	Setting range	Setting method	Ver.
00000000h	Refer to the relevant detail No.	Each axis	Refer to the relevant detail No.

[Pr. PC27.0_Encoder pulse count polarity selection]

Initial value	Setting range	Ver.
0h	Refer to the text	C4

Select a polarity of the load-side encoder.

In the linear servo motor control mode, the polarity of the motor-side encoder changes.

0: Encoder pulse increasing direction in the servo motor CCW or positive direction

1: Encoder pulse decreasing direction in the servo motor CCW or positive direction

This servo parameter is not available for the MR-J5-_B_-LL servo amplifier.

[Pr. PC27.2_ABZ phase input interface encoder ABZ phase connection assessment function selection]

Initial value	Setting range	Ver.
0h	Refer to the text	C4

Select the non-signal detection status for the pulse train signal from the A/B/Z-phase input interface encoder used as a linear encoder or load-side encoder.

This function is enabled when an A/B/Z-phase input interface encoder is used.

Setting value	Detection of disconnection	Alarm status		
	Z-phase-side non-signal	Rotary type (scale measurement function enabled)	Fully closed loop control mode	Linear servo motor control mode
0	Enabled	[AL. 071.6 Load-side encoder normal communication - Transmission data error 2] (Z-phase)	[AL. 071.6] (Z-phase)	[AL. 020.6 Encoder normal communication - Transmission data error 2] (Z-phase)
1	Disabled	—	—	—

This servo parameter is not available for the MR-J5-_B_-LL servo amplifier.

[Pr. PC29_Function selection C-B (*COPB)]

Initial value	Setting range	Setting method	Ver.
00000000h	Refer to the relevant detail No.	Each axis	Refer to the relevant detail No.

[Pr. PC29.0_[AL. 0E2.2 Servo motor temperature warning 2] selection]

Initial value	Setting range	Ver.
0h	Refer to the text	C4

Select whether to enable or disable [AL. 0E2.2 Servo motor temperature warning 2] for when a servo motor with a batteryless absolute position encoder is used.

0: Enabled

1: Disabled

[Pr. PC29.3_Torque POL reflection selection]

Initial value	Setting range	Ver.
0h	Refer to the text	C4

If this servo parameter setting is enabled, the [Pr. PA14 Travel direction selection] setting changes the torque command and torque feedback polarity. This servo parameter is enabled only when [Pr. PA14 Rotation direction selection] is set to "1".

0: Enabled

1: Disabled

- Torque information (other than continuous operation to torque control mode)

Setting value		Servo motor rotation direction/linear servo motor travel direction	
[Pr. PA14]	[Pr. PC29.3]	Torque handled by the controller: positive	Torque handled by the controller: negative
0	0: Enabled	CCW or positive direction	CW or negative direction
	1: Disabled		
1	0: Enabled	CW or negative direction	CCW or positive direction
	1: Disabled	CCW or positive direction	CW or negative direction

- Torque information (continuous operation to torque control mode)

Setting value		Servo motor rotation direction/linear servo motor travel direction	
[Pr. PA14]	[Pr. PC29.3]	Torque handled by the controller: positive	Torque handled by the controller: negative
0	0: Enabled	CCW or positive direction	CW or negative direction
	1: Disabled		
1	0: Enabled		
	1: Disabled		

This servo parameter is not available for the MR-J5-_B_-LL servo amplifier.

[Pr. PC31_Vertical axis freefall prevention compensation amount (RSUP1)]

Initial value	Setting range	Setting method	Ver.
0 [0.0001 rev], [0.01 mm]	-25000 to 25000	Each axis	C4

Set the compensation amount of the vertical axis freefall prevention function.
Set the compensation amount in either the servo motor rotation amount unit or linear servo motor travel distance unit.
When a positive value is set, the compensation is performed to the command address increasing direction. When a negative value is set, compensation is performed to the command address decreasing direction.
The vertical axis freefall prevention function is performed when all of the following conditions are met.

- The setting value of this servo parameter is other than "0".
- The forced stop deceleration function is enabled.
- An alarm has occurred or EM2 has turned off when the servo motor rotates at the zero speed or less. Alternatively, SSCNET III/H communication shut-off has occurred.
- MBR (Electromagnetic brake interlock) was enabled in [Pr. PD07 Output device selection 1] to [Pr. PD09 Output device selection 3] while the base circuit shut-off delay time was set in [Pr. PC02 Electromagnetic brake sequence output].

[Pr. PC37_Function selection C-D (**COPD)]

Initial value	Setting range	Setting method	Ver.
00000000h	Refer to the relevant detail No.	Each axis	Refer to the relevant detail No.

[Pr. PC37.0_Dynamic brake release function selection at servo-off and alarm/warning occurrence]

Initial value	Setting range	Ver.
0h	Refer to the text	F0

Set this parameter when using the dynamic brake release function at servo-off and alarm/warning occurrence.
The dynamic brake status when the base circuit shut-off is activated by the occurrence of an alarm or warning can be selected.
For details, refer to "Dynamic brake release function" in the User's Manual (Function).
When this servo parameter is set to a value other than "0" on a servo amplifier with a capacity of 12 kW or more, [AL. 037 Parameter error] occurs.
0: Dynamic brake state after dynamic brake stop
1: Coasting state after coasting stop
2: Coasting state after dynamic brake stop
3: Dynamic brake state after coasting stop
The stop operation differs depending on the motor stop method. For the motor stop method, refer to "List of alarm No./warning No." in the User's Manual (Troubleshooting).
The transition condition to the stop status is drop of the servo motor speed to the zero speed or less.
When an alarm or warning that triggers the dynamic brake stop operation occurs during the coasting stop operation, the coasting stop operation is interrupted and switched to the dynamic brake stop operation.

Motor stop method	Setting value of [Pr. PC37.0]	Stop operation	Stop status
DB/EDB	0	DB/EDB	DB
	1	FR	FR
	2	DB/EDB	FR
	3	FR	DB
SD	0	SD *1	DB
	1	SD *2	FR
	2	SD *1	FR
	3	SD *2	DB

*1 When [Pr. PA04.3 Forced stop deceleration function selection] is set to "0" (forced stop deceleration function disabled (EM1 is used)), the stop operation is DB.
*2 When [Pr. PA04.3 Forced stop deceleration function selection] is set to "0" (forced stop deceleration function disabled (EM1 is used)), the stop operation is FR.

[Pr. PC37.3_Dynamic brake release function selection at STO input]

Initial value	Setting range	Ver.
0h	Refer to the text	F0

Select the dynamic brake status when the base circuit shut-off is activated by the STO input.
When this servo parameter is set to a value other than "0" on a servo amplifier with a capacity of 12 kW or more, [AL. 037 Parameter error] occurs.
0: Depends on the setting value of [Pr. PC37.0]
1: Dynamic brake state after dynamic brake stop
2: Coasting state after coasting stop
3: Coasting state after dynamic brake stop
4: Dynamic brake state after coasting stop
For the stop operation and stop status, refer to the following.
☞ Page 77 [Pr. PC37.0_Dynamic brake release function selection at servo-off and alarm/warning occurrence]
The transition condition to the stop status is drop of the servo motor speed to the zero speed or less.
When an alarm or warning that triggers the dynamic brake stop operation occurs during the coasting stop operation, the coasting stop operation is interrupted and switched to the dynamic brake stop operation.

Setting value of [Pr. PC37.3]	Stop operation	Stop status
0	Depends on the setting value of [Pr. PC37.0]	Depends on the setting value of [Pr. PC37.0]
1	DB	DB
2	FR	FR
3	DB	FR
4	FR	DB

The target warning of this servo parameter is [AL. 095 STO warning].
The setting of this servo parameter is prioritized over [Pr. PC37.0].

[Pr. PC38_Excessive error warning trigger level (ERW)]

Initial value	Setting range	Setting method	Ver.
0 [rev], [mm]	0 to 1000	Each axis	C4

Set the excessive error warning trigger level.
The unit can be changed with [Pr. PC06.3 Excessive error alarm trigger level/excessive error warning trigger level - Unit selection].
If using a rotary servo motor or direct drive motor, set the level in units of rev. If 200 rev or higher is set, the value will be clamped to 200 rev.
If using a linear servo motor, set the level in units of mm.
When "0" is set, [AL. 09B Excessive error warning] does not occur.
If an error reaches the set value, [AL. 09B] occurs. If the error later becomes less than the setting value, the warning will be automatically canceled. The minimum pulse width of the warning signal output is 100 [ms].
Set as follows: [Pr. PC38 Excessive error warning trigger level] < [Pr. PC01 Excessive error alarm trigger level]. When set as [Pr. PC38] ≥ [Pr. PC01], [AL. 052 Excessive error] occurs before the warning.

[Pr. PC84_Servo amplifier replacement data 1 (SVDT1)]

Initial value	Setting range	Setting method	Ver.
00000000h	00000000h to FFFFFFFFh	Each axis	D0

When [Pr. PF63.2 Servo amplifier replacement data save selection] is set to "1" (enabled), this servo parameter will be set automatically.
Changing the setting value of this servo parameter triggers [AL. 01A Servo motor combination error] at servo amplifier replacement.
When [Pr. PF63.2] is set to "0" (disabled), the value of this servo parameter is "00000000h".

[Pr. PC85_Servo amplifier replacement data 2 (SVDT2)]

Initial value	Setting range	Setting method	Ver.
00000000h	00000000h to FFFFFFFFh	Each axis	D0

When [Pr. PF63.2 Servo amplifier replacement data save selection] is set to "1" (enabled), this servo parameter will be set automatically.
Changing the setting value of this servo parameter triggers [AL. 01A Servo motor combination error] at servo amplifier replacement.
When [Pr. PF63.2] is set to "0" (disabled), the value of this servo parameter is "00000000h".

[Pr. PC86_Servo amplifier replacement data 3 (SVDT3)]

Initial value	Setting range	Setting method	Ver.
00000000h	00000000h to FFFFFFFFh	Each axis	D0

When [Pr. PF63.2 Servo amplifier replacement data save selection] is set to "1" (enabled), this servo parameter will be set automatically.
Changing the setting value of this servo parameter triggers [AL. 01A Servo motor combination error] at servo amplifier replacement.
When [Pr. PF63.2] is set to "0" (disabled), the value of this servo parameter is "00000000h".

[Pr. PC87_Servo amplifier replacement data 4 (SVDT4)]

Initial value	Setting range	Setting method	Ver.
00000000h	00000000h to FFFFFFFFh	Each axis	D0

When [Pr. PF63.2 Servo amplifier replacement data save selection] is set to "1" (enabled), this servo parameter will be set automatically.
Changing the setting value of this servo parameter triggers [AL. 01A Servo motor combination error] at servo amplifier replacement.
When [Pr. PF63.2] is set to "0" (disabled), the value of this servo parameter is "00000000h".

[Pr. PC88_Servo amplifier replacement data 5 (SVDT5)]

Initial value	Setting range	Setting method	Ver.
00000000h	00000000h to FFFFFFFFh	Each axis	D0

When [Pr. PF63.2 Servo amplifier replacement data save selection] is set to "1" (enabled), this servo parameter will be set automatically.
Changing the setting value of this servo parameter triggers [AL. 01A Servo motor combination error] at servo amplifier replacement.
When [Pr. PF63.2] is set to "0" (disabled), the value of this servo parameter is "00000000h".
This servo parameter is not available for the MR-J5-_B_-LL servo amplifier.

[Pr. PC89_Servo amplifier replacement data 6 (SVDT6)]

Initial value	Setting range	Setting method	Ver.
00000000h	00000000h to FFFFFFFFh	Each axis	D0

When [Pr. PF63.2 Servo amplifier replacement data save selection] is set to "1" (enabled), this servo parameter will be set automatically.
Changing the setting value of this servo parameter triggers [AL. 01A Servo motor combination error] at servo amplifier replacement.
When [Pr. PF63.2] is set to "0" (disabled), the value of this servo parameter is "00000000h".
This servo parameter is not available for the MR-J5-_B_-LL servo amplifier.

[Pr. PC90_Servo amplifier replacement data 7 (SVDT7)]

Initial value	Setting range	Setting method	Ver.
00000000h	00000000h to FFFFFFFFh	Each axis	D0

When [Pr. PF63.2 Servo amplifier replacement data save selection] is set to "1" (enabled), this servo parameter will be set automatically.
Changing the setting value of this servo parameter triggers [AL. 01A Servo motor combination error] at servo amplifier replacement.
When [Pr. PF63.2] is set to "0" (disabled), the value of this servo parameter is "00000000h".
This servo parameter is not available for the MR-J5-_B_-LL servo amplifier.

[Pr. PC91_Servo amplifier replacement data 8 (SVDT8)]

Initial value	Setting range	Setting method	Ver.
00000000h	00000000h to FFFFFFFFh	Each axis	D0

When [Pr. PF63.2 Servo amplifier replacement data save selection] is set to "1" (enabled), this servo parameter will be set automatically.
Changing the setting value of this servo parameter triggers [AL. 01A Servo motor combination error] at servo amplifier replacement.
When [Pr. PF63.2] is set to "0" (disabled), the value of this servo parameter is "00000000h".
This servo parameter is not available for the MR-J5-_B_-LL servo amplifier.

[Pr. PC92_Servo amplifier replacement data 9 (SVDT9)]

Initial value	Setting range	Setting method	Ver.
00000000h	00000000h to FFFFFFFFh	Each axis	D0

When [Pr. PF63.2 Servo amplifier replacement data save selection] is set to "1" (enabled), this servo parameter will be set automatically.
Changing the setting value of this servo parameter triggers [AL. 01A Servo motor combination error] at servo amplifier replacement.
When [Pr. PF63.2] is set to "0" (disabled), the value of this servo parameter is "00000000h".
This servo parameter is not available for the MR-J5-_B_-LL servo amplifier.

[Pr. PC93_Servo amplifier replacement data 10 (SVDT10)]

Initial value	Setting range	Setting method	Ver.
00000000h	00000000h to FFFFFFFFh	Each axis	D0

When [Pr. PF63.2 Servo amplifier replacement data save selection] is set to "1" (enabled), this servo parameter will be set automatically.
Changing the setting value of this servo parameter triggers [AL. 01A Servo motor combination error] at servo amplifier replacement.
When [Pr. PF63.2] is set to "0" (disabled), the value of this servo parameter is "00000000h".
This servo parameter is not available for the MR-J5-_B_-LL servo amplifier.

[Pr. PC94_Servo amplifier replacement data 11 (SVDT11)]

Initial value	Setting range	Setting method	Ver.
00000000h	00000000h to FFFFFFFFh	Each axis	D0

When [Pr. PF63.2 Servo amplifier replacement data save selection] is set to "1" (enabled), this servo parameter will be set automatically.
Changing the setting value of this servo parameter triggers [AL. 01A Servo motor combination error] at servo amplifier replacement.
When [Pr. PF63.2] is set to "0" (disabled), the value of this servo parameter is "00000000h".
This servo parameter is not available for the MR-J5-_B_-LL servo amplifier.

[Pr. PC95_Servo amplifier replacement data 12 (SVDT12)]

Initial value	Setting range	Setting method	Ver.
00000000h	00000000h to FFFFFFFFh	Each axis	D0

When [Pr. PF63.2 Servo amplifier replacement data save selection] is set to "1" (enabled), this servo parameter will be set automatically.
Changing the setting value of this servo parameter triggers [AL. 01A Servo motor combination error] at servo amplifier replacement.
When [Pr. PF63.2] is set to "0" (disabled), the value of this servo parameter is "00000000h".
This servo parameter is not available for the MR-J5-_B_-LL servo amplifier.

[Pr. PC96_Output open-phase detection time (*OPDT)]

Initial value	Setting range	Setting method	Ver.
0 [0.1 s]	0 to 100	Each axis	E8

Set the output open-phase detection time.

This servo parameter is enabled when "2" (enabled ([Pr. PC96 Output open-phase detection time] enabled)) is selected in [Pr. PC19.4 Output open-phase detection selection]. When a value other than "2" is selected, the setting value of this servo parameter is disabled.

Changing the detection time changes the detection start speed. For the relationship among [Pr. PA01.1 Operation mode selection], [Pr. PC96], and the detection start speed, refer to the following table.

Setting value [0.1 s]	Output open-phase detection time [s]	Detection start speed [r/min] *1		
		[Pr. PA01.1] = "0" (standard control mode)	[Pr. PA01.1] = "4" (linear servo motor control mode)	[Pr. PA01.1] = "6" (direct drive motor control mode)
0	Automatic (3.0 s)	50	50	25
1	0.1	2600	2600	1300
2	0.2	1250	1250	625
3	0.3	850	850	425
4	0.4	600	600	300
5	0.5	500	500	250
10	1.0	250	250	125
20	2.0	100	100	50
25	2.5	100	100	50
26	2.6	50	50	25
30	3.0			
40	4.0			
50	5.0			
60	6.0			
70	7.0			
80	8.0			
90	9.0			
100	10.0			

*1 Setting a value that exceeds the maximum speed of the connected servo motor in the detection start speed triggers [AL. 037 Parameter error].

1.5 I/O setting servo parameters group ([Pr. PD_ _])

[Pr. PD02_Input signal automatic ON selection 2 (*DIA2)]

Initial value	Setting range	Setting method	Ver.
00000000h	Refer to the relevant detail No.	Each axis	Refer to the relevant detail No.

[Pr. PD02.0_Input signal automatic ON selection 1]

Initial value	Setting range	Ver.
0h	Refer to the text	C4

Select input devices that turn on automatically.

Setting digit (BIN)	Functions
_ _ _ x	Upper stroke limit selection (FLS) 0: Disabled 1: Enabled
_ _ x _	Lower stroke limit selection (RLS) 0: Disabled 1: Enabled
_ x _ _	For manufacturer setting
x _ _ _	For manufacturer setting

[Pr. PD02.1_For manufacturer setting]

This servo parameter is for manufacturer setting.

[Pr. PD02.2_For manufacturer setting]

This servo parameter is for manufacturer setting.

[Pr. PD02.3_For manufacturer setting]

This servo parameter is for manufacturer setting.

[Pr. PD02.4_For manufacturer setting]

This servo parameter is for manufacturer setting.

[Pr. PD02.5_For manufacturer setting]

This servo parameter is for manufacturer setting.

[Pr. PD02.6_For manufacturer setting]

This servo parameter is for manufacturer setting.

[Pr. PD02.7_For manufacturer setting]

This servo parameter is for manufacturer setting.

[Pr. PD07_Output device selection 1 (*DO1)]

Initial value	Setting range	Setting method	Ver.
00000005h	Refer to the relevant detail No.	Each axis	Refer to the relevant detail No.

Select the device to be assigned to the output signal of CN3 connector. The connector pin numbers to be assigned are as follows.

Model	Shaft	Connector pin No.	Initially assigned device
MR-J5-_B_(-RJ) MR-J5-_B_-LL	—	CN3-13	MBR
MR-J5W2-_B_	A-axis	CN3-12	MBR-A
	B-axis	CN3-25	MBR-B
MR-J5W3-_B_	A-axis	CN3-12	MBR-A
	B-axis	CN3-25	MBR-B
	C-axis	CN3-13	MBR-C

[Pr. PD07.0-1_Device selection]

Initial value	Setting range	Ver.
05h	Refer to the text	C4

When setting [Pr. PA02.4 Simple converter selection] to "2" (MR-CM08K1), assign RDY. When assigning RDY with [Pr. PD07 Output device selection 1] to [Pr. PD09 Output device selection 3], assign it to all the servo amplifiers to be connected to the MR-CM08K1. If RDY is not assigned, [AL. 037 Parameter error] occurs. When using a 1-axis servo amplifier, assign RDY to one of [Pr. PD07] to [Pr. PD09]. When using a multi-axis servo amplifier and assigning RDY with [Pr. PD07], assign RDY to all axes. When using a multi-axis servo amplifier and assigning RDY with [Pr. PD08] or [Pr. PD09], set [Pr. PD08] or [Pr. PD09] to "00000101" and turn on RDY for the desired axis. For the connection method of the MR-CM08K1, refer to "Servo amplifier setting when using a simple converter" in the User's Manual (Hardware).
Refer to the following table for setting values.

Setting value	Output signal device
00	Always off
01	RDY
02	RD
03	ALM
04	INP
05	MBR
06 *1	DB
07	TLC
08	WNG
09	BWNG
0A	SA
0B	VLC
0C	ZSP
0E	WNGSTOP
0F	CDPS
10	CLDS
11	ABSV
17	MTTR
18	CDPS2
1C *2	FR

*1 For the servo amplifier that does not support the external dynamic brake, this device is not necessary.
*2 Available on servo amplifiers with firmware version F0 or later.

[Pr. PD08_Output device selection 2 (*DO2)]

Initial value	Setting range	Setting method	Ver.
00000004h	Refer to the relevant detail No.	Common	Refer to the relevant detail No.

Select the device to be assigned to the output signal of CN3 connector. The connector pin numbers to be assigned are as follows.

Model	Shaft	Connector pin No.	Initially assigned device
MR-J5-_B_(-RJ) MR-J5-_B_-LL	—	CN3-9	INP
MR-J5W2-_B_	A-axis	CN3-24	CINP
	B-axis		
MR-J5W3-_B_	A-axis	CN3-24	CINP
	B-axis		
	C-axis		

[Pr. PD08.0-1_Device selection]

Initial value	Setting range	Ver.
04h	Refer to the text	C4

Refer to the following for setting values.

☞ Page 84 [Pr. PD07_Output device selection 1 (*DO1)]

[Pr. PD08.2_All-axis output condition selection]

Initial value	Setting range	Ver.
0h	Refer to the text	C4

0: AND output

1: OR output

For AND output, the condition becomes significant (on or off) when the A, B, and C-axes all satisfy the condition.

The device name at this time is C_ _ _. (Example: CINP)

For OR output, the condition becomes significant (on or off) when any of A, B, or C-axis satisfies the condition.

The device name at this time is X_ _ _. (Example: XINP)

This servo parameter is enabled when [Pr. PD08.3 Output axis selection] is set to "0" (all axes) while a multi-axis servo amplifier is used.

[Pr. PD08.3_Output axis selection]

Initial value	Setting range	Ver.
0h	Refer to the text	C4

0: All axes

1: A-axis

2: B-axis

3: C-axis

If the setting value is 1, the device name is _ _ _-A. (Example: INP-A)

If the setting value is 2, the device name is _ _ _-B. (Example: INP-B)

If the setting value is 3, the device name is _ _ _-C. (Example: INP-C)

[Pr. PD09_Output device selection 3 (*DO3)]

Initial value	Setting range	Setting method	Ver.
00000003h	Refer to the relevant detail No.	Common	Refer to the relevant detail No.

Select the device to be assigned to the output signal of CN3 connector. The connector pin numbers to be assigned are as follows.

Model	Shaft	Connector pin No.	Initially assigned device
MR-J5-_B_(-RJ)	—	CN3-15	ALM
MR-J5W2-_B_	A-axis	CN3-11	CALM
	B-axis		
MR-J5W3-_B_	A-axis	CN3-11	CALM
	B-axis		
	C-axis		

[Pr. PD09.0-1_Device selection]

Initial value	Setting range	Ver.
03h	Refer to the text	C4

Refer to the following for setting values.

☞ Page 84 [Pr. PD07_Output device selection 1 (*DO1)]

This servo parameter is not available for the MR-J5-_B_-LL servo amplifier.

[Pr. PD09.2_All-axis output condition selection]

Initial value	Setting range	Ver.
0h	Refer to the text	C4

0: AND output

1: OR output

For AND output, the condition becomes significant (on or off) when the A, B, and C-axes all satisfy the condition.

The device name at this time is C_ _ _. (Example: CINP)

For OR output, the condition becomes significant (on or off) when any of A, B, or C-axis satisfies the condition.

The device name at this time is X_ _ _. (Example: XINP)

This servo parameter is enabled when [Pr. PD09.3 Output axis selection] is set to "0" (all axes) while a multi-axis servo amplifier is used.

This servo parameter is not available for the MR-J5-_B_-LL servo amplifier.

[Pr. PD09.3_Output axis selection]

Initial value	Setting range	Ver.
0h	Refer to the text	C4

0: All axes

1: A-axis

2: B-axis

3: C-axis

If the setting value is 1, the device name is _ _ _-A. (Example: INP-A)

If the setting value is 2, the device name is _ _ _-B. (Example: INP-B)

If the setting value is 3, the device name is _ _ _-C. (Example: INP-C)

This servo parameter is not available for the MR-J5-_B_-LL servo amplifier.

[Pr. PD11_Input filter setting (*DIF)]

Initial value	Setting range	Setting method	Ver.
00000007h	Refer to the relevant detail No.	Common	Refer to the relevant detail No.

[Pr. PD11.0_Input signal filter selection]

Initial value	Setting range	Ver.
7h	Refer to the text	C4

Setting value	Filtering time [ms]
0	No filter
1	0.500
2	1.000
3	1.500
4	2.000
5	2.500
6	3.000
7	3.500
8	4.000
9	4.500
A	5.000
B	5.500

This servo parameter is not available for the MR-J5-_B_-LL servo amplifier.

[Pr. PD12_Function selection D-1 (*DOP1)]

Initial value	Setting range	Setting method	Ver.
00000000h	Refer to the relevant detail No.	Each axis	Refer to the relevant detail No.

Set the servo motor thermistor to either enabled or disabled.

[Pr. PD12.3_Servo motor thermistor - Enabled/disabled selection]

Initial value	Setting range	Ver.
0h	Refer to the text	C4

0: Enabled

1: Disabled

This servo parameter is enabled when a servo motor compatible with a thermistor is used. When a servo motor not compatible with a thermistor is used, the servo parameter is disabled (temperature monitoring disabled/alarm disabled) regardless of the setting value.

No alarm is detected in motor-less operation.

When the temperature monitoring of the motor thermistor is disabled, "9999 °C" is displayed.

This servo parameter is not available for the MR-J5-_B_-LL servo amplifier.

[Pr. PD13_Function selection D-2 (*DOP2)]

Initial value	Setting range	Setting method	Ver.
00000000h	Refer to the relevant detail No.	Each axis	Refer to the relevant detail No.

[Pr. PD13.2_INP output signal ON condition selection]

Initial value	Setting range	Ver.
0h	Refer to the text	C4

Select a condition for outputting INP (In-position).

INP (In-position) immediately after servo-on or after forced stop is canceled is off.

If no command is entered within approximately 1 ms, the servo amplifier considers command output to have been completed.

0: Within the in-position range

1: Within the in-position range and at the completion of command output

[Pr. PD14_Function selection D-3 (*DOP3)]

Initial value	Setting range	Setting method	Ver.
00000000h	Refer to the relevant detail No.	Each axis	Refer to the relevant detail No.

[Pr. PD14.1_Output device status at warning occurrence]

Initial value	Setting range	Ver.
0h	Refer to the text	C4

Select ALM (Malfunction) output status at warning occurrence.

Setting value	Device status
0	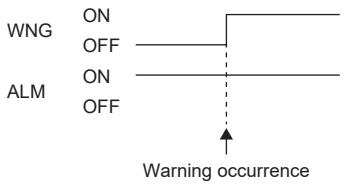
1	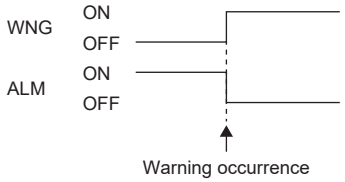

[Pr. PD15_Driver communication setting (*IDCS)]

Initial value	Setting range	Setting method	Ver.
00000000h	Refer to the relevant detail No.	Each axis	Refer to the relevant detail No.

[Pr. PD15.0_Master axis operation selection]

Initial value	Setting range	Ver.
0h	Refer to the text	C4

0: Disabled (master-slave operation function is not used)

1: Enabled (set this servo amplifier for the master axis)

To set the servo amplifier for the slave axis, set "0".

This servo parameter is not available for the MR-J5-_B_-LL servo amplifier.

[Pr. PD15.1_Slave axis operation selection]

Initial value	Setting range	Ver.
0h	Refer to the text	C4

0: Disabled (master-slave operation function is not used)

1: Enabled (set this servo amplifier for the slave axis)

To set the servo amplifier for the master axis, set "0".

This servo parameter is not available for the MR-J5-_B_-LL servo amplifier.

[Pr. PD16_Driver communication setting - Master - Transmit data selection 1 (*MD1)]

Initial value	Setting range	Setting method	Ver.
00000000h	00000000h to 0000FFFFh	Each axis	C4

Select the data to send from the master axis to the slave axis.

Set this servo parameter to "00000038 (torque command)" when setting the servo amplifier as the master axis (when [Pr. PD15.0] is set to "1").

This servo parameter setting is disabled when the servo amplifier is set as the slave axis (when [Pr. PD15.0] is set to "0").

This servo parameter is not available for the MR-J5-_B_-LL servo amplifier.

[Pr. PD17_Driver communication setting - Master - Transmit data selection 2 (*MD2)]

Initial value	Setting range	Setting method	Ver.
00000000h	00000000h to 0000FFFFh	Each axis	C4

Select the data to send from the master axis to the slave axis.

Set this servo parameter to "0000003A (speed limit command)" when setting the servo amplifier as the master axis (when [Pr. PD15.0] is set to "1").

This servo parameter setting is disabled when the servo amplifier is set as the slave axis (when [Pr. PD15.0] is set to "0").

This servo parameter is not available for the MR-J5-_B_-LL servo amplifier.

[Pr. PD20_Driver communication setting - Slave - Master axis No. selection 1 (*SLA1)]

Initial value	Setting range	Setting method	Ver.
0	0 to 32	Each axis	C4

Set the axis number of the servo amplifier for the corresponding master axis of the slave axis.
This servo parameter is enabled when the servo amplifier is set as the slave axis (when [Pr. PD15.1] is set to "1"). For axis numbers, refer to "Switches" in the User's Manual (Introduction).
When the setting value of this servo parameter is "0", the setting is disabled.
This servo parameter is not available for the MR-J5-_B_-LL servo amplifier.

[Pr. PD30_Master-slave operation - Slave-side torque command coefficient (TLS)]

Initial value	Setting range	Setting method	Ver.
0 [%]	0 to 500	Each axis	C4

For the torque command value received from the master axis, set the coefficient to reflect to the internal torque command.
This servo parameter is enabled when the servo amplifier is set as the slave axis (when [Pr. PD15.1] is set to "1").
The maximum value for this setting is 500. When a value higher than 500 is set, the setting is fixed at "500".
When this servo parameter is set to "100", the coefficient is multiplied by 1. The torque distribution is 100 (master): 100 (slave).
When this servo parameter is set to "90", the coefficient is multiplied by 0.9. The torque distribution is 100 (master): 90 (slave).
This servo parameter is not available for the MR-J5-_B_-LL servo amplifier.

[Pr. PD31_Master-slave operation - Slave-side speed limit coefficient (VLC)]

Initial value	Setting range	Setting method	Ver.
0 [%]	0 to 500	Each axis	C4

For the speed limit command value received from the master axis, set the coefficient to reflect to the internal speed limit value.
This servo parameter is enabled when the servo amplifier is set as the slave axis (when [Pr. PD15.1] is set to "1").
The maximum value for this setting is 500. When a value higher than 500 is set, the setting is fixed at "500".
When this servo parameter is set to "100", the coefficient is multiplied by 1. The setting example is described below.

Ex.
[Pr. PD31] = "140"
[Pr. PD32] = "300" and
the master side is operated with an acceleration/deceleration of 1000 r/min:

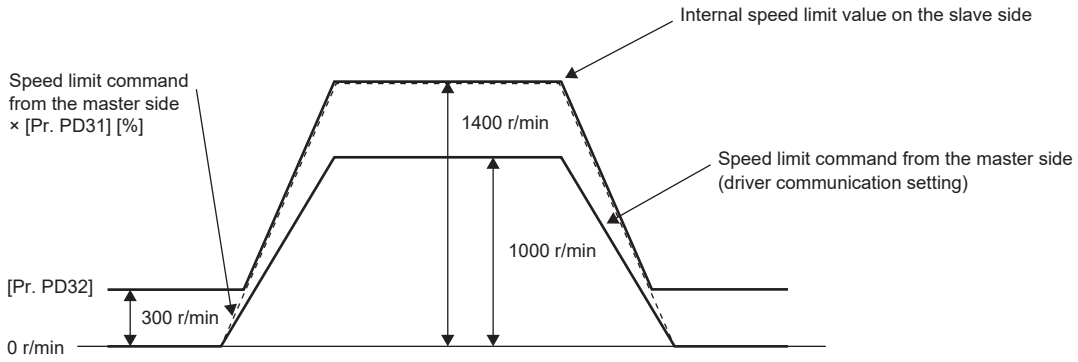

This servo parameter is not available for the MR-J5-_B_-LL servo amplifier.

[Pr. PD32_Master-slave operation - Slave-side speed limit adjusted value (VLL)]

Initial value	Setting range	Setting method	Ver.
0 [r/min]	0 to 32767	Each axis	C4

Set the minimum internal speed limit value.

This servo parameter is enabled when the servo amplifier is set as the slave axis (when [Pr. PD15.1] is set to "1"). The speed limit value will not be lower than the setting value of this servo parameter.

This servo parameter ensures torque control range at low speed operation (by avoiding area likely to reach speed limit). Set to approximately 100 to 500 [r/min] in general. For setting examples, refer to [Pr. PD31 Master-slave operation - Slave-side speed limit coefficient].

☞ Page 90 [Pr. PD31_Master-slave operation - Slave-side speed limit coefficient (VLC)]

This servo parameter is not available for the MR-J5-_B_-LL servo amplifier.

1.6 Extension setting 2 servo parameters group ([Pr. PE_ _])

[Pr. PE01_Fully closed loop control function selection 1 (**FCT1)]

Initial value	Setting range	Setting method	Ver.
00000000h	Refer to the relevant detail No.	Each axis	Refer to the relevant detail No.

[Pr. PE01.0_Fully closed loop function selection]

Initial value	Setting range	Ver.
0h	Refer to the text	C4

Select the fully closed loop function.

This servo parameter is enabled when [Pr. PA01.4 Fully closed loop operation mode selection] is set to "1" (enabled (fully closed loop control mode)).

If this servo parameter is set to "1" while [Pr. PA03.0 Absolute position detection system selection] has been set to "1" (enabled (absolute position detection system)), [AL. 037 Parameter error] will occur.

0: Always enabled

1: Switching by fully closed loop selection command from the controller

Fully closed loop selection Command from controller	Control method
OFF	Semi closed loop control
ON	Fully closed loop control

This servo parameter is not available for the MR-J5-_B_-LL servo amplifier.

[Pr. PE01.4_Fully closed loop control - Droop pulse clear selection]

Initial value	Setting range	Ver.
0h	Refer to the text	D4

When switching between semi closed loop control and fully closed loop control is performed, select whether to clear droop pulses.

0: Enabled

1: Disabled

When the setting value of this servo parameter is "0" (enabled), switching the semi closed loop control to the fully closed loop control clears the load-side droop pulses. In addition, switching the fully closed loop control to the semi closed loop control clears the motor-side droop pulses. For these reasons, shock is reduced at switching between semi closed loop control and fully closed loop control.

When the setting value of this servo parameter is "1" (disabled), perform switching between semi closed loop control and fully closed loop control with the motor-side and the load-side connected. If the switching between semi closed loop control and fully closed loop control is performed when the motor-side and the load-side are not connected, the servo motor may cause an unexpected operation such as sudden acceleration.

This servo parameter is not available for the MR-J5-_B_-LL servo amplifier.

[Pr. PE03_Fully closed loop control function selection 2 (*FCT2)]

Initial value	Setting range	Setting method	Ver.
00000003h	Refer to the relevant detail No.	Each axis	Refer to the relevant detail No.

[Pr. PE03.0_Fully closed loop control error - Detection function selection]

Initial value	Setting range	Ver.
3h	Refer to the text	C4

0: Disabled

1: Speed deviation error detection

2: Position deviation error detection

3: Speed deviation error detection and position deviation error detection

Refer to the following table for the combination with [Pr. PE03.1 Position deviation error - Detection method selection].

○: Error detection enabled —: Error detection disabled

Setting value		Speed deviation error	Position deviation error		
			In servo-on state		In servo-off state
[Pr. PE03.1]	[Pr. PE03.0]		With commands	No commands (= 0)	
0	0	—	—	—	—
0	1	○	—	—	—
0	2	—	○	○	○
0	3	○	○	○	○
1	0	—	—	—	—
1	1	○	—	—	—
1	2	—	—	○	—
1	3	○	—	○	—
2	0	—	—	—	—
2	1	○	—	—	—
2	2	—	—	○	○
2	3	○	—	○	○

This servo parameter is not available for the MR-J5-_B_-LL servo amplifier.

[Pr. PE03.1_Position deviation error - Detection method selection]

Initial value	Setting range	Ver.
0h	Refer to the text	C4

0: Continuous detection

1: Detection only at stop (An error is detected if the command is "0".)

2: Detection only at stop 2 (An error is detected during servo-off or if the command is "0" while in servo-on state.)

Refer to the following table for the combination with [Pr. PE03.0 Fully closed loop control error - Detection function selection].

☞ Page 93 [Pr. PE03.0_Fully closed loop control error - Detection function selection]

This servo parameter is not available for the MR-J5-_B_-LL servo amplifier.

[Pr. PE03.3_Fully closed loop control error - Reset selection]

Initial value	Setting range	Ver.
0h	Refer to the text	C4

0: Reset disabled (reset by cycling the power or software reset)

1: Reset enabled

This servo parameter is not available for the MR-J5-_B_-LL servo amplifier.

[Pr. PE04_Fully closed loop control - Feedback pulse electronic gear 1 - Numerator (**FBN)]

Initial value	Setting range	Setting method	Ver.
1	1 to 4294967295	Each axis	C4

If using the fully closed loop control, set the electronic gear numerator to the servo motor encoder pulses.
Set the electronic gear so that the number of the servo motor encoder pulses per servo motor revolution is converted into load-side encoder resolution.
If the reduced electronic gear numerator exceeds 2147483648 (31 bits), [AL. 037 Parameter error] occurs.
This servo parameter is not available for the MR-J5-_B_-LL servo amplifier.

[Pr. PE05_Fully closed loop control - Feedback pulse electronic gear 1 - Denominator (**FBD)]

Initial value	Setting range	Setting method	Ver.
1	1 to 4294967295	Each axis	C4

If using the fully closed loop control, set the electronic gear denominator to the servo motor encoder pulses.
Set the electronic gear so that the number of the servo motor encoder pulses per servo motor revolution is converted into load-side encoder resolution.
If the reduced electronic gear denominator exceeds 1073741824 (30 bits), [AL. 037 Parameter error] occurs.
This servo parameter is not available for the MR-J5-_B_-LL servo amplifier.

[Pr. PE06_Fully closed loop control - Speed deviation error detection level (BC1)]

Initial value	Setting range	Setting method	Ver.
400 [r/min]	1 to 50000	Each axis	C4

Set the detection level for triggering [AL. 042.9 Fully closed loop control error based on speed deviation] of the fully closed loop control error detection. If the difference between the speed calculated by the servo motor encoder and the speed calculated by the load-side encoder exceeds the value of this servo parameter, the alarm occurs.
This servo parameter is not available for the MR-J5-_B_-LL servo amplifier.

[Pr. PE07_Fully closed loop control - Position deviation error detection level (BC2)]

Initial value	Setting range	Setting method	Ver.
100 [kpulse]	1 to 20000	Each axis	C4

Set the detection level for triggering [AL. 042.8 Fully closed loop control error based on position deviation] of the fully closed loop control error detection. If the difference between the position of the servo motor encoder and the position of the load-side encoder exceeds the value of this servo parameter, the alarm occurs.
This servo parameter is not available for the MR-J5-_B_-LL servo amplifier.

[Pr. PE08_Fully closed loop dual feedback filter (DUF)]

Initial value	Setting range	Setting method	Ver.
10 [rad/s]	1 to 4500	Each axis	C4

Set a dual feedback filter band.
This servo parameter is not available for the MR-J5-_B_-LL servo amplifier.

[Pr. PE10_Fully closed loop function selection 3 (FCT3)]

Initial value	Setting range	Setting method	Ver.
00000000h	Refer to the relevant detail No.	Each axis	Refer to the relevant detail No.

[Pr. PE10.1_Fully closed loop control - Position deviation error detection level - Unit selection]

Initial value	Setting range	Ver.
0h	Refer to the text	C4

0: 1 kpulse unit

1: 1 pulse unit

This servo parameter is not available for the MR-J5-_B_-LL servo amplifier.

[Pr. PE10.2_Droop pulse monitor selection for controller display]

Initial value	Setting range	Ver.
0h	Refer to the text	C4

0: Servo motor encoder

1: Load-side encoder

2: Deviation between the servo motor and load side

This servo parameter is not available for the MR-J5-_B_-LL servo amplifier.

[Pr. PE10.3_Cumulative feedback pulse monitor selection for controller display]

Initial value	Setting range	Ver.
0h	Refer to the text	C4

Set this servo parameter when using a fully closed loop system or the scale measurement function.

0: Servo motor encoder

1: Load-side encoder

This servo parameter is not available for the MR-J5-_B_-LL servo amplifier.

[Pr. PE41_Function selection E-3 (EOP3)]

Initial value	Setting range	Setting method	Ver.
00000000h	Refer to the relevant detail No.	Each axis	Refer to the relevant detail No.

[Pr. PE41.0_Robust filter selection]

Initial value	Setting range	Ver.
0h	Refer to the text	C4

0: Disabled

1: Enabled

When this setting value is set to "Enabled", the machine resonance suppression filter 5 set in [Pr. PB51 Notch shape selection 5] cannot be used.

[Pr. PE41.6_Unbalanced torque offset setting selection]

Initial value	Setting range	Ver.
0h	Refer to the text	C4

0: Manual setting

1: Automatic setting

If "1" (automatic setting) has been set and friction estimation by the machine diagnosis function has completed for both the forward and reverse rotations, the value of [Pr. PE47 Unbalanced torque offset] will be set automatically according to the estimated friction value. After [Pr. PE47] is set automatically, this servo parameter changes to "0" (Manual setting). The value of [Pr. PE47] will not be set automatically and this servo parameter keeps the value "1" (automatic setting) until friction estimation completes for both the forward and reverse rotations.

[Pr. PE44_Lost motion compensation positive-side compensation value selection (LMCP)]

Initial value	Setting range	Setting method	Ver.
0 [0.01 %]	0 to 30000	Each axis	C4

Set the lost motion compensation for when negative speed switches to positive speed in increments of 0.01 % in relation to the rated torque as 100 %.

This function is enabled in the position control mode.

[Pr. PE45_Lost motion compensation negative-side compensation value selection (LMCN)]

Initial value	Setting range	Setting method	Ver.
0 [0.01 %]	0 to 30000	Each axis	C4

Set the lost motion compensation for when positive speed switches to negative speed in increments of 0.01 % in relation to the rated torque as 100 %.

This function is enabled in the position control mode.

[Pr. PE46_Lost motion filter setting (LMFLT)]

Initial value	Setting range	Setting method	Ver.
0 [0.1 ms]	0 to 30000	Each axis	C4

When "0" is set, the value is compensated with the compensation amount of the value that was set in [Pr. PE44 Lost motion compensation positive-side compensation value selection] and [Pr. PE45 Lost motion compensation negative-side compensation value selection]. When a value other than "0" is set, the torque is compensated with the high-pass filter output value of the set time constant, and the lost motion compensation will continue.

This function is enabled in the position control mode.

[Pr. PE47_Unbalanced torque offset (TOF)]

Initial value	Setting range	Setting method	Ver.
0 [0.01 %]	-10000 to 10000	Each axis	C4

Set this to cancel the unbalanced torque of a vertical axis. Set this in relation to the rated torque of the servo motor as 100 %. The torque offset does not need to be set for a machine that does not generate unbalanced torque. This servo parameter can be used in applications where an unbalanced torque is generated constantly, such as when a linear servo motor or direct drive motor is operated horizontally with tension applied in one direction.

The torque offset that has been set with this servo parameter is enabled in any control mode. In the torque control mode, input commands that take the torque offset into account.

This servo parameter is suitable when the torque offset does not need to be changed dynamically.

[Pr. PE48_Lost motion compensation function selection (*LMOP)]

Initial value	Setting range	Setting method	Ver.
00000000h	Refer to the relevant detail No.	Each axis	Refer to the relevant detail No.

This function is enabled in the position control mode.

[Pr. PE48.0_Lost motion compensation type selection]

Initial value	Setting range	Ver.
0h	Refer to the text	C4

0: Lost motion compensation disabled

1: Lost motion compensation enabled

[Pr. PE48.1_Lost motion compensation dead band unit setting]

Initial value	Setting range	Ver.
0h	Refer to the text	C4

0: 1 pulse unit

1: 1 kpulse unit

[Pr. PE49_Lost motion compensation timing (LMCD)]

Initial value	Setting range	Setting method	Ver.
0 [0.1 ms]	0 to 30000	Each axis	C4

Set the lost motion compensation timing in units of 0.1 ms.

The timing to perform the lost motion compensation function can be delayed by a set time.

This function is enabled in the position control mode.

[Pr. PE50_Lost motion compensation dead band (LMCT)]

Initial value	Setting range	Setting method	Ver.
0 [pulse], [kpulse]	0 to 65535	Each axis	C4

Set the lost motion compensation dead band. When the fluctuation of droop pulses is equal to or less than the setting value, the speed is recognized as 0. The setting unit can be changed with [Pr. PE48 Lost motion compensation function selection].

Set the servo parameter per encoder unit.

This function is enabled in the position control mode.

[Pr. PE51_Load-side encoder resolution setting (**EDV2)]

Initial value	Setting range	Setting method	Ver.
0 [pulse]	0 to 4294967295	Each axis	C4

When the fully closed loop control mode or the scale measurement function is enabled, the encoder is recognized as an A/B/Z-phase differential output rotary encoder by setting a load-side encoder resolution in this servo parameter with the A/B/Z-phase differential output rotary encoder connected to the load-side. At this time, the cycle counter is displayed. A load-side encoder resolution is the number of pulses output when the encoder is rotated by one revolution.

When "0" is set in this servo parameter, the encoder is recognized as an A/B/Z-phase differential output linear encoder. At this time, the Z-phase counter (the distance from the linear encoder home position (Z-phase)) is displayed after the Z-phase is passed.

When the resolution set in this servo parameter is either less than 2^{12} or greater than 2^{22}, [AL. 037 Parameter error] occurs.

This servo parameter is not available for the MR-J5-_B_-LL servo amplifier.

As shown in the following figures, the display of the load-side encoder information 1 monitor changes depending on the setting value of this servo parameter.

- When "0" is set in [Pr. PE51]

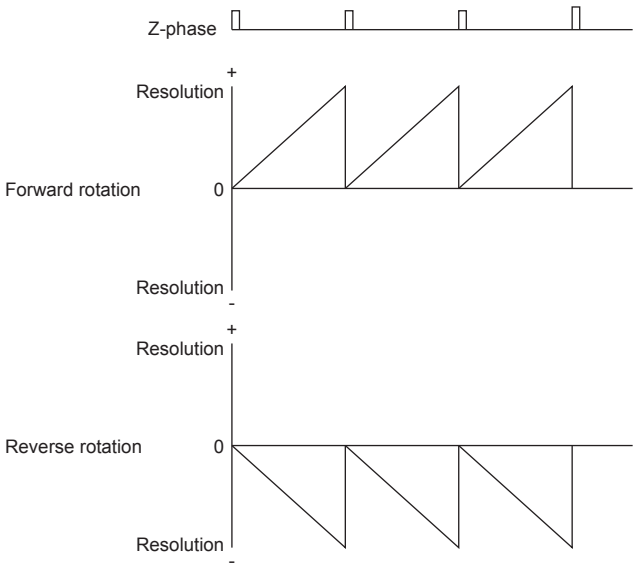

- When a load-side encoder resolution is set in [Pr. PE51]

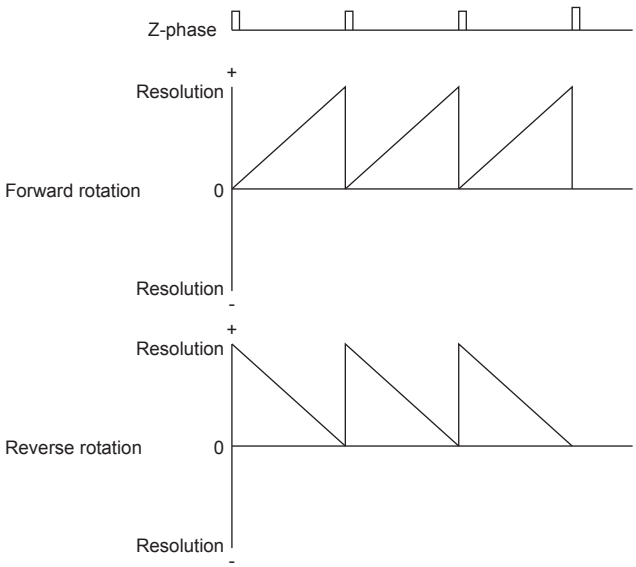

1.7 Extension setting 3 servo parameters group ([Pr. PF_ _])

[Pr. PF02_Function selection F-2 (*FOP2)]

Initial value	Setting range	Setting method	Ver.
00000000h	Refer to the relevant detail No.	Common	Refer to the relevant detail No.

[Pr. PF02.0_Target alarm selection of the other axis error warning]

Initial value	Setting range	Ver.
0h	Refer to the text	C4

Select target alarms of the other axis error warning.

For alarms occurring at all axes, [AL. 0EB The other axis error warning] will not occur regardless of alarm No.

[AL. 0EB The other axis error warning] does not occur in 1-axis servo amplifiers.

0: [AL. 024 Main circuit error], [AL. 032 Overcurrent]

1: All alarms

[Pr. PF02.4_Memory writing frequency warning enable/disable selection]

Initial value	Setting range	Ver.
0h	Refer to the text	C4

Enable or disable [AL. 1F8.1 Memory writing frequency warning].

[AL. 1F8.1] indicates that the memory writing frequency has exceeded the guaranteed number of times.

If the servo amplifier continues to be used while the alarm is disabled with this servo parameter, the memory may be corrupted and restoration of the data, such as servo parameters, may fail.

0: Enabled

1: Disabled

[Pr. PF02.5_Memory free space warning enable/disable selection]

Initial value	Setting range	Ver.
0h	Refer to the text	C4

Select whether to enable or disable [AL. 1F8.2 Memory free space warning].

[AL. 1F8.2] indicates that the memory free space is running low.

If the servo amplifier continues to be used while the alarm is disabled with this servo parameter, [AL. 119.7 Memory free space 4-1] may occur and data restoration may fail.

0: Enabled

1: Disabled

[Pr. PF06_Function selection F-5 (*FOP5)]

Initial value	Setting range	Setting method	Ver.
00000013h	Refer to the relevant detail No.	Each axis	Refer to the relevant detail No.

[Pr. PF06.0_Electronic dynamic brake selection]

Initial value	Setting range	Ver.
3h	Refer to the text	C4

Enable or disable the electronic dynamic brake.

2: Disabled

3: Enabled only for specific servo motors

For specific servo motors, refer to "Precautions relating to the dynamic brake characteristics" in the User's Manual (Hardware).

[Pr. PF06.1_STO timing error selection]

Initial value	Setting range	Ver.
1h	Refer to the text	C4

Select whether [AL. 063 STO timing error] is detected.

0: Detected.

1: Not detected.

If the STO status is set at the servo motor speed shown below while "0" (detected) has been selected", [AL. 063 STO timing error] will be detected. The STO status means the status where STO1 or STO2 of CN8 has been turned off.

- Servo motor speed: 50 r/min or higher
- Linear servo motor speed: 50 mm/s or higher
- Direct drive motor speed: 5 r/min or higher

[Pr. PF12_Electronic dynamic brake operating time (DBT)]

Initial value	Setting range	Setting method	Ver.
2000 [ms]	0 to 10000	Each axis	C4

Set an operating time for the electronic dynamic brake.

[Pr. PF18_STO diagnosis error detection time (**STOD)]

Initial value	Setting range	Setting method	Ver.
10 [s]	0 to 60	Common	C4

Set the time from when the error of the STO input or STO circuit is detected until the occurrence of [AL. 068.1 STO signal mismatch error].
When "0" is set, [AL. 068.1] is not detected.
The safety level depends on the setting value of this servo parameter and whether STO input diagnosis is performed by TOFB output as shown in the following table.

Setting value	STO input diagnosis by TOFB output	Safety level
0	Execute	EN ISO 13849-1: 2015 Category 3 PL d, IEC 61508 SIL 2, and EN IEC 62061 maximum SIL 2
	Do not execute	
1 to 60	Execute	EN ISO 13849-1: 2015 Category 3 PL e, IEC 61508 SIL 3, and EN IEC 62061 maximum SIL 3
	Do not execute	EN ISO 13849-1: 2015 Category 3 PL d, IEC 61508 SIL 2, and EN IEC 62061 maximum SIL 2

When the STO function is not used with the short-circuit connector connected to the CN8 connector, the safety level does not change even after setting this servo parameter.

[Pr. PF19_Friction failure prediction - Compensation coefficient 1 (TSL)]

Initial value	Setting range	Setting method	Ver.
0 [0.0001 %/°C]	-32768 to 32767	Each axis	C4

Set compensation coefficient 1 to compensate the dynamic friction being used for the friction failure prediction.
When the friction failure prediction warning selection is set to the automatic threshold setting, the value will be calculated automatically from the estimated dynamic friction.
When performing threshold manual setting on an equipment for which the threshold setting has been made once, set the value that has been calculated by the threshold automatic setting.
Setting this servo parameter decreases the possibility of erroneous detection of friction failure prediction, even with the manual threshold setting.

[Pr. PF20_Friction failure prediction - Compensation coefficient 2 (TIC)]

Initial value	Setting range	Setting method	Ver.
0 [0.1 %]	-10000 to 10000	Each axis	C4

Set compensation coefficient 2 to compensate the dynamic friction being used for the friction failure prediction.
When the friction failure prediction warning selection is set to the automatic threshold setting, the value will be calculated automatically from the estimated dynamic friction.
When performing threshold manual setting on an equipment for which the threshold setting has been made once, set the value that has been calculated by the threshold automatic setting.
Setting this servo parameter decreases the possibility of erroneous detection of friction failure prediction, even with the manual threshold setting.

[Pr. PF21_Drive recorder switching time setting (DRT)]

Initial value	Setting range	Setting method	Ver.
0 [s]	-1 to 32767	Common	C4

Set the drive recorder switching time.

When communication is shut off during the use of a graph function, the function will be switched to the drive recorder function after the time set in this servo parameter has passed.

In the following cases during the use of a graph function, the function may be automatically switched to the drive recorder function after the time set in this servo parameter has passed.

- The trigger waiting time is longer than the time set in this servo parameter.
- The waveform data reading time is longer than the time set in this servo parameter.

In the following cases, review the setting value of this servo parameter.

- A communication error occurs after the start of graph measurement.
- The graph measurement is not finished.

When "-1" is set, the drive recorder function is disabled.

When "0" is set, the drive recorder function will be switched after 600 s (10 min).

When any value of "1" to "9" is set, the drive recorder function will be switched after 10 s.

When any value of "10" to "32767" is set, the drive recorder function will be switched after the time set in this servo parameter has passed.

[Pr. PF23_Vibration tough drive - Oscillation detection level (OSCL1)]

Initial value	Setting range	Setting method	Ver.
20 [%]	0 to 100	Each axis	C4

Set the oscillation detection level for readjusting the machine resonance suppression filter while the vibration tough drive is enabled.

When the oscillation level is higher than the setting value of this servo parameter, reset [Pr. PB13 Machine resonance suppression filter 1] or [Pr. PB15 Machine resonance suppression filter 2].

When "0" is set, the oscillation detection level is 20 %.

[Pr. PF24_Function selection F-9 (*FOP9)]

Initial value	Setting range	Setting method	Ver.
00000000h	Refer to the relevant detail No.	Each axis	Refer to the relevant detail No.

[Pr. PF24.0_Oscillation detection alarm selection]

Initial value	Setting range	Ver.
0h	Refer to the text	C4

Select the alarm output at oscillation detection.

Select whether to generate an alarm or a warning when an oscillation continues at a level set in [Pr. PF23 Vibration tough drive - Oscillation detection level].

This function is enabled regardless of the setting of [Pr. PA20.1 Vibration tough drive selection].

0: Alarm ([AL. 054 Oscillation detection])

1: Warning ([AL. 0F3.1 Oscillation detection warning])

2: Oscillation detection function disabled (oscillation detection not processed)

[Pr. PF25_SEMI-F47 function - Instantaneous power failure detection time (Instantaneous power failure tough drive detection time) (CVAT)]

Initial value	Setting range	Setting method	Ver.
200 [ms]	30 to 500	Common	C4

Set the time until the occurrence of [AL. 010.1 Voltage drop in the control circuit power].
To comply with SEMI-F47 standard, it is not required to change the time from the initial value (200 ms).
When the instantaneous power failure time exceeds 200 ms, and the instantaneous power failure voltage is less than 70 % of the rated input voltage, the power may be turned off normally even if a value larger than 200 ms is set in this servo parameter.
This function is disabled when [Pr. PA20.2 SEMI-F47 function selection] is set to "0" (disabled).
When a common bus connection using a servo amplifier with a capacity of 12 kW to 25 kW as the main unit is constructed, it cannot comply with the SEMI-F47 standard even if [Pr. PA20.2] is set to "1" (enabled) and this servo parameter is set. For details, refer to "Common bus connection system using an MR-J5 servo amplifier with a capacity of 12 kW or more as the main unit" in the User's Manual (Hardware) or "Compliance with SEMI-F47 standard" in the User's Manual (Function).

[Pr. PF31_Machine diagnosis function - Friction estimate area judgment speed at low speed (FRIC)]

Initial value	Setting range	Setting method	Ver.
0 [r/min], [mm/s]	0 to 65535	Each axis	C4

Set the servo motor speed to divide the friction estimation area between low-speed and high-speed in the friction estimation process of machine diagnosis.
When the maximum operation speed is under the rated speed, it is recommended to set half the value of the maximum operation speed.
When "0" is set, the judgment speed is half of the rated speed.
The setting value will be clamped at the permissible maximum speed.
By setting [Pr. PF34.6 Friction estimate area judgment speed setting] to "1" (automatic setting), this servo parameter value will be automatically calculated from the operation pattern during servo motor driving and overwrite the value.
Set a value larger than [Pr. PC07 Zero speed] for this servo parameter. If the value is equal to or lower than zero speed, the friction estimation process does not function.

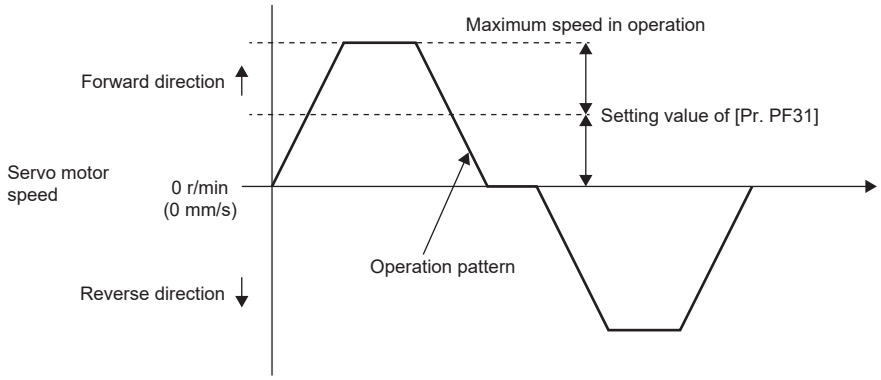

[Pr. PF34_Machine diagnosis function selection (*MFP)]

Initial value	Setting range	Setting method	Ver.
00000000h	Refer to the relevant detail No.	Each axis	Refer to the relevant detail No.

[Pr. PF34.0_Friction failure prediction warning selection]

Initial value	Setting range	Ver.
0h	Refer to the text	C4

0: Disabled
1: Enabled (automatic threshold setting)
2: Enabled (manual threshold setting)
3: Threshold reset
When "2" is set, if the dynamic friction exceeds the set threshold, [AL. 0F7.2 Friction failure prediction warning] will occur.
When "3" is set, the setting of the servo parameter will change to "1" automatically after the threshold is reset.

[Pr. PF34.1_Vibration failure prediction warning selection]

Initial value	Setting range	Ver.
0h	Refer to the text	C4

0: Disabled
1: Enabled (automatic threshold setting)
2: Enabled (manual threshold setting)
3: Threshold reset
When "2" is set, if the vibration level exceeds the set threshold, [AL. 0F7.1 Vibration failure prediction warning] will occur.
When "3" is set, the setting of the servo parameter will change to "1" automatically after the threshold is reset.

[Pr. PF34.2_Servo motor total travel distance failure prediction warning selection]

Initial value	Setting range	Ver.
0h	Refer to the text	C4

0: Disabled
1: Enabled
2: Servo motor total travel distance reset
When "1" is set, if the value of the servo motor total travel distance + [Pr. PF47 Servo motor total travel distance offset] exceeds the value of [Pr. PF41 Failure prediction - Servo motor total travel distance], [AL. 0F7.3 Servo motor total travel distance failure prediction warning] will occur.
When "2" is set, the setting of the servo parameter will change to "1" automatically after the servo motor total travel distance reset.

[Pr. PF34.5_Static friction failure prediction warning selection]

Initial value	Setting range	Ver.
0h	Refer to the text	C4

0: Disabled
1: Automatic threshold setting
2: Manual threshold setting
3: Threshold reset
When "2" is set, if the static friction exceeds the set threshold, [AL. 0F7.5 Friction failure prediction warning] will occur.
When "3" is set, the setting of the servo parameter will change to "1" automatically after the threshold is reset.

[Pr. PF34.6_Friction estimate area judgment speed setting]

Initial value	Setting range	Ver.
0h	Refer to the text	C4

Select the setting method of "Machine diagnosis function - Friction estimate area judgment speed at low speed".
0: Manual setting
1: Automatic setting
When "1" (automatic setting) is set, [Pr. PF31 Machine diagnosis function - Friction estimate area judgment speed at low speed] will be calculated according to the servo motor operation pattern. After the calculation, [Pr. PF31] is rewritten to the calculation result, and the servo parameter will change to "0" (manual setting).
When "1" (automatic setting) is set, friction estimation stops.

[Pr. PF40_Machine failure prediction servo parameter (MFPP)]

Initial value	Setting range	Setting method	Ver.
00000000h	Refer to the relevant detail No.	Each axis	Refer to the relevant detail No.

[Pr. PF40.0_Friction failure prediction - Threshold multiplication]

Initial value	Setting range	Ver.
0h	0h to Fh	C4

Set a multiplying factor for calculating the threshold used in the friction failure prediction function.
The smaller the multiplying factor for the friction failure prediction threshold, the smaller the threshold used for friction failure prediction, which makes it easier to predict failure earlier, but also increases the possibility of erroneous detection.
When "0" is set, the threshold multiplying factor is 5.

[Pr. PF40.1_Vibration failure prediction - Threshold multiplication]

Initial value	Setting range	Ver.
0h	0h to Fh	C4

Set a multiplying factor for calculating the threshold used in the vibration failure prediction function.
The smaller the multiplying factor for the vibration failure prediction threshold, the smaller the threshold used for vibration failure prediction, which makes it easier to predict failure earlier, but also increases the possibility of erroneous detection.
When "0" is set, the threshold multiplying factor is 5.

[Pr. PF40.2_Friction failure prediction - Dynamic friction selection]

Initial value	Setting range	Ver.
0h	Refer to the text	C4

Select the dynamic friction to use for friction failure prediction.
0: Automatic setting
1: Dynamic friction at forward rotation torque (at rated speed)
2: Dynamic friction at reverse rotation torque (at rated speed)
3: Absolute value average at forward rotation/reverse rotation torque
When set to "0", the value changes to any of "1" to "3", depending on the operation pattern.

[Pr. PF40.4_Static friction failure prediction - Threshold multiplication]

Initial value	Setting range	Ver.
0h	0h to Fh	C4

Set a multiplying factor for calculating the threshold used in the static friction failure prediction function.
Setting a small threshold multiplication for static friction failure prediction will decrease the threshold used for static friction failure prediction. Thus, this will enable the prediction of a failure at an early stage, but will increase the possibility of erroneously detecting a failure.
When "0" is set, the threshold multiplying factor is 5.

[Pr. PF40.5_Static friction failure prediction - Static friction selection]

Initial value	Setting range	Ver.
0h	Refer to the text	C4

Select the static friction to use for static friction failure prediction.
0: Automatic setting
1: At forward rotation torque
2: At reverse rotation torque
3: Average at forward rotation/reverse rotation torque
When set to "0", the value changes to any of "1" to "3", depending on the operation pattern.

[Pr. PF41_Failure prediction - Servo motor total travel distance (FPMT)]

Initial value	Setting range	Setting method	Ver.
0 [10 rev], [m]	0 to 4294967295	Each axis	C4

Set a servo motor total travel distance required for determining the threshold used in the friction failure prediction function and the servo motor total travel distance failure prediction function.
When Servo motor total travel distance exceeds 1/2 of "Failure prediction - Servo motor total travel distance", the threshold will be automatically calculated for the friction failure prediction function.
When [Pr. PF34.2 Servo motor total travel distance failure prediction warning selection] is set to "1" (enabled), if the servo motor total travel distance + the value of [Pr. PF47 Servo motor total travel distance offset] exceeds the value of this servo parameter, [AL. 0F7.3 Servo motor total travel distance failure prediction warning] occurs.

[Pr. PF42_Friction failure prediction - Average characteristics (PAV)]

Initial value	Setting range	Setting method	Ver.
0 [0.1 %]	-10000 to 10000	Each axis	C4

Set the friction torque average value at the rated speed.
This servo parameter is enabled when [Pr. PF34.0 Friction failure prediction warning selection] is set to "2" (enabled (manual threshold setting)).
When [Pr. PF34.0 Friction failure prediction warning selection] is set to "1" (enabled (automatic threshold setting)), the value will be calculated automatically from the estimated friction torque at rated speed.

[Pr. PF43_Friction failure prediction - Standard deviation (PSD)]

Initial value	Setting range	Setting method	Ver.
0 [0.1 %]	0 to 20000	Each axis	C4

Set the friction torque standard deviation at the rated speed.
This servo parameter is enabled when [Pr. PF34.0 Friction failure prediction warning selection] is set to "2" (enabled (manual threshold setting)).
When [Pr. PF34.0 Friction failure prediction warning selection] is set to "1" (enabled (automatic threshold setting)), the value will be calculated automatically from the estimated friction torque at rated speed.

[Pr. PF45_Vibration failure prediction - Average characteristics (VAV)]

Initial value	Setting range	Setting method	Ver.
0 [0.1 %]	0 to 10000	Each axis	C4

Set a vibration level average during servo motor operation.
This servo parameter is enabled when [Pr. PF34.0 Friction failure prediction warning selection] is set to "2" (enabled (manual threshold setting)).
When [Pr. PF34.0 Friction failure prediction warning selection] is set to "1" (enabled (automatic threshold setting)), the value will be calculated automatically from the estimated friction torque at rated speed.

[Pr. PF46_Vibration failure prediction - Standard deviation (VSD)]

Initial value	Setting range	Setting method	Ver.
0 [0.1 %]	0 to 20000	Each axis	C4

Set the vibration level standard deviation during servo motor operation.
This servo parameter is enabled when [Pr. PF34.0 Friction failure prediction warning selection] is set to "2" (enabled (manual threshold setting)).
When [Pr. PF34.0 Friction failure prediction warning selection] is set to "1" (enabled (automatic threshold setting)), the value will be calculated automatically from the estimated friction torque at rated speed.

[Pr. PF47_Servo motor total travel distance offset (TMO)]

Initial value	Setting range	Setting method	Ver.
0 [10 rev], [m]	0 to 4294967295	Each axis	C4

Set an offset value for machine total travel distance.
After the equipment is replaced, set this servo parameter.

[Pr. PF63_Function selection F-15 (*FOP15)]

Initial value	Setting range	Setting method	Ver.
00000000h	Refer to the relevant detail No.	Each axis	Refer to the relevant detail No.

[Pr. PF63.0_[AL. 01A.5 Servo motor combination error 3] selection]

Initial value	Setting range	Ver.
0h	Refer to the text	D0

Select whether to enable or disable [AL. 01A.5 Servo motor combination error 3] for when a servo motor with a batteryless absolute position encoder is replaced.
0: Enabled
1: Disabled
With "1" (disabled) selected, connecting a servo motor that had not been connected at the startup of the absolute position detection system triggers [AL. 025.1 Servo motor encoder absolute position erased] instead of [AL. 01A.5 Servo motor combination error 3].
Connecting a servo motor other than the ones with a batteryless absolute position encoder triggers [AL. 01A.5].

[Pr. PF63.1_[AL. 01A.6 Servo motor combination error 4] selection]

Initial value	Setting range	Ver.
0h	Refer to the text	D0

Select whether to enable or disable [AL. 01A.6 Servo motor combination error 4] for when a servo motor with a batteryless absolute position encoder is replaced.
0: Enabled
1: Disabled
With "1" (disabled) selected, connecting a servo motor that had not been connected at the startup of the absolute position detection system triggers [AL. 025.2 Scale measurement encoder - Absolute position erased] instead of [AL. 01A.6 Servo motor combination error 4].
Connecting a servo motor other than the ones with a batteryless absolute position encoder triggers [AL. 01A.6].
This servo parameter is not available for the MR-J5-_B_-LL servo amplifier.

[Pr. PF63.2_Servo amplifier replacement data save selection]

Initial value	Setting range	Ver.
0h	Refer to the text	D0

Whether or not to store the servo amplifier replacement data can be set for equipment which uses an absolute position detection system with a servo motor with a batteryless absolute position encoder.
0: Disabled ([AL. 025 Absolute position erased] occurs at servo amplifier replacement.)
1: Enabled ([AL. 025 Absolute position erased] does not occur at servo amplifier replacement.)
With "1" (enabled) set, [AL. 025] does not occur even when the power is turned on after servo amplifier replacement. This enables positioning operation without performing homing again.
For multi-axis servo amplifiers, this servo parameter cannot be used to enable only specific axes. If "1" (enabled) is set for any of the axes, all the axes are enabled.
When the setting value of this servo parameter is "1" (enabled), values are automatically set for [Pr. PC84 Servo amplifier replacement data 1] to [Pr. PC95 Servo amplifier replacement data 12].

[Pr. PF66_Gear setting for backlash estimation (BLG)]

Initial value	Setting range	Setting method	Ver.
00000000h	Refer to the relevant detail No.	Each axis	Refer to the relevant detail No.

[Pr. PF66.0-3_Gear for backlash estimation - Numerator]

Initial value	Setting range	Ver.
0000h	0000h to FFFFh	C4

Set the gear ratio numerator of the gear connected to the servo motor in hexadecimal. If multiple gears are connected to the servo motor, set the gear ratio up to where the load is applied.
If the gear ratio numerator and the denominator cannot be expressed by numbers up to "2^{16}-1", round up the gear ratio and set a value equal to or less than "2^{16}-1" for both the numerator and the denominator.

[Pr. PF66.4-7_Gear for backlash estimation - Denominator]

Initial value	Setting range	Ver.
0000h	0000h to FFFFh	C4

Set the gear ratio denominator of the gear connected to the servo motor in hexadecimal. If multiple gears are connected to the servo motor, set the gear ratio up to where the load is applied.
If the gear ratio numerator and the denominator cannot be expressed by numbers up to "2^{16}-1", round up the gear ratio and set a value equal to or less than "2^{16}-1" for both the numerator and the denominator.

[Pr. PF67_Backlash nominal value (BLN)]

Initial value	Setting range	Setting method	Ver.
0 [0.01 degree]	0 to 3600000	Each axis	C4

To set the threshold for gear failure prediction, a backlash nominal value must be set. Input a backlash value presented by the manufacturer of the gear connected to the servo motor.
When [Pr. PF66.0-3 Gear for backlash estimation - Numerator] or [Pr. PF66.4-7 Gear for backlash estimation - Denominator] is set to "0", input the backlash nominal value after converting the value into the rotation angle on the servo motor side.
When [Pr. PF66.0-3] or [Pr. PF66.4-7] is set to a value other than "0", input a value considering the gear ratio for backlash estimation.
When the setting value of this servo parameter is "0", even if backlash estimation is performed, [AL. 0F7 Machine diagnosis warning] will not be generated.

[Pr. PF68_Backlash threshold multiplication (BLTT)]

Initial value	Setting range	Setting method	Ver.
0	0 to 3600000	Each axis	C4

Set the threshold multiplication that will be used for setting the threshold for gear failure prediction. The threshold used for the gear failure prediction is expressed by the following equation.
Backlash threshold = [Pr. PF67 Backlash nominal value]/100 × [Pr. PF68 Backlash threshold multiplication]/10
When the setting value of this servo parameter is "0", a value twice the value of [Pr. PF67 Backlash nominal value]/100 is set as the backlash threshold.
When the backlash threshold is "0", [AL. 0F7 Machine diagnosis warning] will not be generated even if the backlash estimation is performed.

[Pr. PF69_Static friction failure prediction - Average characteristics (SPAV2)]

Initial value	Setting range	Setting method	Ver.
0 [0.1 %]	0 to 10000	Each axis	C4

Set a static friction torque average.
This servo parameter is enabled when [Pr. PF34.5 Static friction failure prediction warning selection] is set to "2" (manual threshold setting).
When [Pr. PF34.5 Static friction failure prediction warning selection] is set to "1" (automatic threshold setting), the value will be calculated automatically from the estimated static friction torque.

[Pr. PF70_Static friction failure prediction - Standard deviation (SPSD2)]

Initial value	Setting range	Setting method	Ver.
0 [0.1 %]	0 to 20000	Each axis	C4

Set a standard deviation of static friction torque.
This servo parameter is enabled when [Pr. PF34.5 Static friction failure prediction warning selection] is set to "2" (manual threshold setting).
When [Pr. PF34.5 Static friction failure prediction warning selection] is set to "1" (automatic threshold setting), the value will be calculated automatically from the estimated friction torque at rated speed.

[Pr. PF71_Belt failure prediction function selection (BFP)]

Initial value	Setting range	Setting method	Ver.
00000000h	Refer to the relevant detail No.	Each axis	Refer to the relevant detail No.

[Pr. PF71.0_Belt tension deterioration prediction function selection]

Initial value	Setting range	Ver.
0h	Refer to the text	C4

0: Disabled

1: Execute only belt tension estimation

2: Belt tension deterioration prediction function enabled

After the equipment goes into full-scale operation, enable the belt tension deterioration prediction function.

[Pr. PF71.1_Belt tension deterioration prediction friction selection]

Initial value	Setting range	Ver.
0h	Refer to the text	C4

Select a static friction setting used for belt tension deterioration prediction.

0: Automatic setting

1: At forward rotation torque

2: At reverse rotation torque

3: Average at forward rotation/reverse rotation torque

When set to "0", the value changes to any of "1" to "3", depending on the operation pattern.

[Pr. PF72_Belt tension on installation (SBT)]

Initial value	Setting range	Setting method	Ver.
0 [0.1 N]	0 to 1000000	Each axis	C4

Set a belt tension for when the belt is attached to the equipment. The servo parameter indicates the reference belt tension threshold used in the belt diagnosis function.

[Pr. PF73_Belt tension when extended (ABT)]

Initial value	Setting range	Setting method	Ver.
0 [0.1 N]	0 to 1000000	Each axis	C4

After the equipment is operated, set a belt tension for when the belt stretches or for when the belt is looser than at the time of the attachment. After the belt has been attached to the equipment, the time taken for the belt to stretch depends on the belt type. For the time taken for the belt to stretch, refer to the catalog or other documents from the manufacturer.

The belt tension deterioration prediction function is disabled when the setting is: [Pr. PF72 Belt tension on installation] < [Pr. PF73 Belt tension when extended].

[Pr. PF74_Static friction during installation (SSF)]

Initial value	Setting range	Setting method	Ver.
0 [0.1 %]	0 to 10000	Each axis	C4

Set a static friction for when the belt is attached to the equipment. Set the static friction with any of the following values estimated by the friction estimation function depending on the value of [Pr. PF71.1 Belt tension deterioration prediction friction selection]: static friction at forward rotation, static friction at reverse rotation, or the average of the estimated frictions.

[Pr. PF75_Static friction when extended (ASF)]

Initial value	Setting range	Setting method	Ver.
0 [0.1 %]	0 to 10000	Each axis	C4

Set a static friction for when the belt stretches or for when the belt is looser than at the time of the attachment. Set the static friction with any of the following values estimated by the friction estimation function depending on the value of [Pr. PF71.1 Belt tension deterioration prediction friction selection]: static friction at forward rotation, static friction at reverse rotation, or the average of the estimated frictions.

The belt tension deterioration prediction function is disabled when the setting is: [Pr. PF74 Static friction during installation] < [Pr. PF75 Static friction when extended].

[Pr. PF76_Belt tension irregular threshold (BTS)]

Initial value	Setting range	Setting method	Ver.
0 [0.1 %]	0 to 1000	Each axis	C4

Set a threshold to generate [AL. 0F7 Machine diagnosis warning]. Set this servo parameter as a percentage of [Pr. PF72 Belt tension on installation]. When using the belt diagnosis function, input a value other than "0".

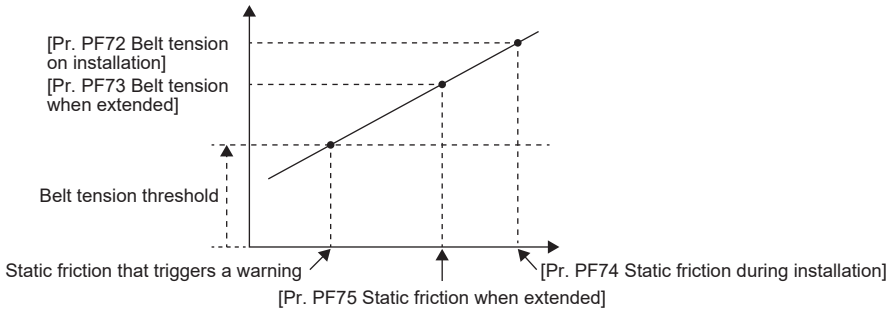

Belt tension threshold = [Pr. PF76 Belt tension irregular threshold]/100 × [Pr. PF72 Belt tension on installation]

[Pr. PF80_Drive recorder - Operation condition selection (DRMC)]

Initial value	Setting range	Setting method	Ver.
00000000h	Refer to the relevant detail No.	Each axis	Refer to the relevant detail No.

[Pr. PF80.0_Drive recorder - Operation mode selection]

Initial value	Setting range	Ver.
0h	Refer to the text	C4

0: Automatic setting mode

1: Manual setting mode

When "0" (automatic setting mode) is set, the setting values of [Pr. PF81 Drive recorder - Sampling operation selection] to [Pr. PF94 Drive recorder - Digital channel setting 4] are disabled. The drive recorder will be activated automatically at the same time as an alarm occurs.

When obtaining desired analog data from the drive recorder, set this servo parameter to "1" (manual setting mode) to set the trigger conditions and sampling cycle, and then start sampling with [Pr. PF81.0 Drive recorder - Sampling start selection].

To disable the drive recorder, set [Pr. PF21 Drive recorder switching time setting] to "-1" (drive recorder function disabled).

[Pr. PF80.2-3_Drive recorder - Sampling cycle selection]

Initial value	Setting range	Ver.
00h	Refer to the text	C4

Set the sampling cycle of the drive recorder.

When [Pr. PF80.0] is set to "0" (automatic setting mode), the setting value of this servo parameter is disabled.

Setting value	8 kHz class
00	Automatic (250 μs)
05	250 μs
06	500 μs
07	1 ms
08	2 ms
09	4 ms
0A	8 ms
0B	16 ms
0C	32 ms
0D	64 ms
0E	128 ms
0F	256 ms
10	512 ms
11	1.024 s

[Pr. PF81_Drive recorder - Sampling operation selection (DRMS)]

Initial value	Setting range	Setting method	Ver.
00000000h	Refer to the relevant detail No.	Each axis	Refer to the relevant detail No.

[Pr. PF81.0_Drive recorder - Sampling start selection]

Initial value	Setting range	Ver.
0h	Refer to the text	C4

Set this servo parameter to start drive recorder sampling.
When [Pr. PF80.0 Drive recorder - Operation mode selection] is set to "0" (automatic setting mode), the setting value of the servo parameter is disabled.
When this servo parameter is set to "1" or "2", if the settings of [Pr. PF80.2-3 Drive recorder - Sampling cycle selection] and [Pr. PF82 Drive recorder - Trigger operation selection] to [Pr. PF94 Drive recorder - Digital channel setting 4] are changed, the changed settings are not applied to the drive recorder. To apply the settings, cycle the power, reset the software, or set this servo parameter to "0" (stop sampling), then set "1" or "2" again.
The storage area of the servo amplifier has a limit for the number of writings. If the trigger conditions that have been set in [Pr. PF82] are frequently met, do not continue using this servo parameter when it is set to "2" (continuous sampling).
0: Stop sampling
1: Start a single sampling
2: Start a consecutive sampling
When "1" (start a single sampling) is set, if the trigger conditions are fulfilled after sampling starts, the drive recorder will operate to save data once. After the data has been saved, this servo parameter will be "0" automatically.
When "2" (start a consecutive sampling) is set, if the trigger conditions are fulfilled after sampling starts, the drive recorder will operate to save data. After that, sampling will start again.

[Pr. PF82_Drive recorder - Trigger operation selection (DRTM)]

Initial value	Setting range	Setting method	Ver.
00000000h	Refer to the relevant detail No.	Each axis	Refer to the relevant detail No.

[Pr. PF82.0_Drive recorder - Trigger mode selection]

Initial value	Setting range	Ver.
0h	Refer to the text	C4

Select the trigger mode for the drive recorder.
When [Pr. PF80.0 Drive recorder - Operation mode selection] is set to "0" (automatic setting mode), the setting value of the servo parameter is disabled.
0: Alarm trigger
1: Analog trigger/digital trigger
When "0" (alarm trigger) is set, trigger settings other than [Pr. PA23 Drive recorder desired alarm trigger setting] and [Pr. PF84.4-5 Drive recorder - Trigger position setting] are disabled. Refer to the following table for the unavailable servo parameters.

Servo parameter	Name
PF82.1	Drive recorder - Trigger binding condition selection
PF82.2	Drive recorder - Trigger operation selection 1
PF82.3	Drive recorder - Trigger operation selection 2
PF84.0-1	Drive recorder - Trigger channel selection 1
PF84.2-3	Drive recorder - Trigger channel selection 2
PF85	Drive recorder - Trigger level setting 1
PF86	Drive recorder - Trigger level setting 2

[Pr. PF82.1_Drive recorder - Trigger binding condition selection]

Initial value	Setting range	Ver.
0h	Refer to the text	C4

Select the trigger binding condition for the drive recorder.
When this servo parameter is set to "0" (disabled), the settings of [Pr. PF84.2-3 Drive recorder - Trigger channel selection 2] and [Pr. PF86 Drive recorder - Trigger level setting 2] are disabled.
When [Pr. PF80.0 Drive recorder - Operation mode selection] is set to "0" (automatic setting mode), or [Pr. PF80.0] is set to "1" and [Pr. PF82.0 Drive recorder - Trigger mode selection] is set to "0" (alarm trigger), the setting value of this servo parameter is disabled.
0: Disabled
1: Logical AND of trigger signals
2: Logical OR of trigger signals

[Pr. PF82.2_Drive recorder - Trigger operation selection 1]

Initial value	Setting range	Ver.
0h	Refer to the text	C4

Select whether sampling starts when the signal output for the drive recorder channel set in [Pr. PF84.0-1 Drive recorder - Trigger channel selection 1] exceeds or falls below the set trigger level.
When [Pr. PF80.0 Drive recorder - Operation mode selection] is set to "0" (automatic setting mode), or [Pr. PF80.0] is set to "1" and [Pr. PF82.0] is set to "0", the setting value of this servo parameter is disabled.
0: Rising
1: Falling

[Pr. PF82.3_Drive recorder - Trigger operation selection 2]

Initial value	Setting range	Ver.
0h	Refer to the text	C4

Select whether sampling starts when the signal output for the drive recorder channel set in [Pr. PF84.2-3 Drive recorder - Trigger channel selection 2] exceeds or falls below the set trigger level.
The servo parameter is disabled in the following conditions.
- [Pr. PF80.0 Drive recorder - Operation mode selection] is set to "0" (automatic setting mode)
- [Pr. PF82.0 Drive recorder - Trigger mode selection] is set to "0" (alarm trigger)
- [Pr. PF82.1 Drive recorder - Trigger binding condition selection] is set to "0" (disabled)

0: Rising
1: Falling

[Pr. PF83_Drive recorder - Trigger operation axis common selection (**DRTAX)]

Initial value	Setting range	Setting method	Ver.
00000000h	Refer to the relevant detail No.	Common	Refer to the relevant detail No.

[Pr. PF83.0_Drive recorder - Trigger axis common selection]

Initial value	Setting range	Ver.
0h	Refer to the text	C4

For when the trigger conditions of the drive recorder are met on a multi-axis servo amplifier, select whether to store only the data of the axis in which the conditions are met, or to store the data of all axis.

0: Disabled

1: Enabled

When "0" (disabled) is set, the drive recorder data is stored on the axis in which the trigger conditions are met.

If "1" (enabled) is set, the trigger conditions will be regarded as having been met on all axes even if the trigger conditions have only been met on Axis A, B, or C. The trigger conditions are not regarded as having been met on axes for which "0" (automatic setting mode) is set in [Pr. PF80.0 Drive recorder - Operation mode selection].

The servo parameter is disabled in the following conditions.

- MR-J5-_B_
- The axis of a multi-axis servo amplifier which has [Pr. PF80.0] set to "0" (automatic setting) is used.
- The axis of a multi-axis servo amplifier which has [Pr. PF80.0] set to "1" (manual setting mode) and [Pr. PF82.0] set to "0" (alarm trigger) is used.

[Pr. PF84_Drive recorder - Trigger channel selection (DRTC)]

Initial value	Setting range	Setting method	Ver.
005A8101h	Refer to the relevant detail No.	Each axis	Refer to the relevant detail No.

[Pr. PF84.0-1_Drive recorder - Trigger channel selection 1]

Initial value	Setting range	Ver.
01h	Refer to the text	C4

Set the trigger channel No. 1 of the drive recorder.

The servo parameter is disabled in the following conditions.

- [Pr. PF80.0 Drive recorder - Operation mode selection] is set to "0" (automatic setting mode)
- [Pr. PF82.0 Drive recorder - Trigger mode selection] is set to "0" (alarm trigger)

Setting value	Meaning
01	Analog channel 1
02	Analog channel 2
03	Analog channel 3
04	Analog channel 4
05	Analog channel 5
06	Analog channel 6
07	Analog channel 7
81	Digital channel 1
82	Digital channel 2
83	Digital channel 3
84	Digital channel 4
85	Digital channel 5
86	Digital channel 6
87	Digital channel 7
88	Digital channel 8

[Pr. PF84.2-3_Drive recorder - Trigger channel selection 2]

Initial value	Setting range	Ver.
81h	Refer to the text	C4

Set the trigger channel No. 2 of the drive recorder. The setting value is the same as that of [Pr. PF84.0-1].

☞ Page 119 [Pr. PF84.0-1_Drive recorder - Trigger channel selection 1]

The servo parameter is disabled in the following conditions.

- [Pr. PF80.0 Drive recorder - Operation mode selection] is set to "0" (automatic setting mode)
- [Pr. PF82.0 Drive recorder - Trigger mode selection] is set to "0" (alarm trigger)
- [Pr. PF82.1 Drive recorder - Trigger binding condition selection] is set to "0" (disabled)

[Pr. PF84.4-5_Drive recorder - Trigger position setting]

Initial value	Setting range	Ver.
5Ah	00h to 6Fh	C4

Convert trigger position 1 (0 % to 100 % of the total sampling time of the drive recorder) to a hexadecimal value, and set the value. When trigger position 1 exceeds 100 %, the value will be clamped to 100 %.

For example, to set the trigger position to 30 %, set "1Eh" in this servo parameter.

[Pr. PF85_Drive recorder - Trigger level setting 1 (DRTL1)]

Initial value	Setting range	Setting method	Ver.
0	-2147483648 to 2147483647	Each axis	C4

Set the trigger level of trigger channel No. 1 of the drive recorder in decimal.

Set the value considering the decimal point.

For example, if setting a torque of 100.0 [%] for the trigger level, set this servo parameter to "1000" because the torque unit is [0.1 %].

The servo parameter is disabled in the following conditions.

- [Pr. PF80.0 Drive recorder - Operation mode selection] is set to "0" (automatic setting mode)
- [Pr. PF80.0] is set to "1" (manual setting mode) and [Pr. PF82.0 Drive recorder - Trigger mode selection] is set to "0" (alarm trigger)
- A digital channel is set in the first trigger of [Pr. PF84.0-1 Drive recorder - Trigger channel selection 1].

[Pr. PF86_Drive recorder - Trigger level setting 2 (DRTL2)]

Initial value	Setting range	Setting method	Ver.
0	-2147483648 to 2147483647	Each axis	C4

Set the trigger level of trigger channel No. 2 of the drive recorder in decimal.

Set the value considering the decimal point.

For example, if setting a torque of 100.0 [%] for the trigger level, set this servo parameter to "1000" because the torque unit is [0.1 %].

The servo parameter is disabled in the following conditions.

- [Pr. PF80.0 Drive recorder - Operation mode selection] is set to "0" (automatic setting mode)
- [Pr. PF80.0] is set to "1" (manual setting mode) and [Pr. PF82.0 Drive recorder - Trigger mode selection] is set to "0" (alarm trigger)
- [Pr. PF82.1 Drive recorder - Trigger binding condition selection] is set to "0" (disabled)
- A digital channel is set in the second trigger of [Pr. PF84.2-3 Drive recorder - Trigger channel selection 2].

[Pr. PF87_Drive recorder - Analog channel setting 1 (DRAC1)]

Initial value	Setting range	Setting method	Ver.
00020201h	Refer to the relevant detail No.	Each axis	Refer to the relevant detail No.

[Pr. PF87.0-2_Drive recorder - Analog channel 1 selection]

Initial value	Setting range	Ver.
201h	Refer to the text	C4

Select the data to be assigned to analog channel 1 of the drive recorder.

The servo parameter is disabled in the following conditions.

- [Pr. PF80.0 Drive recorder - Operation mode selection] = "0" (automatic setting mode)

Refer to the following table for setting values.

Values not listed below are undefined. Only set the values that are listed in the following table.

Setting value	Data type	Unit *1	Category
000	No assigned function	—	—
001	Servo motor speed	r/min	16-bit data
002	Torque/instantaneous torque	0.1 %	
003	Current command	0.1 %	
005	Command pulse frequency (speed unit)	r/min	
007	Droop pulses (1 pulse unit)	pulse	
008	Speed command	r/min	
009	Bus voltage	V	
00A *3	Pressure command	LSB	
00B *3	Pressure feedback	LSB	
00C	Effective load ratio	0.1 %	
00D	Regenerative load ratio	0.1 %	
00E	Position within one-revolution	16 pulse	
00F	ABS counter	rev	
010	Load to motor inertia ratio	0.01 multiplier	
011	Torque equivalent to disturbance	0.1 %	
012	Overload alarm margin	0.1 %	
014	Settling time	ms	
015	Overshoot amount	pulse	
016 *3	Analog monitor input 1	LSB	
017 *3	Analog monitor input 2	LSB	
01C	Load-side encoder droop pulses (1 pulse unit)	pulse	
01E	Motor-side/load-side position deviation (1 pulse unit)	pulse	
020	Motor-side/load-side speed deviation	r/min	
021	Servo motor speed (unit of 0.1 r/min)	0.1 r/min	
022	Command pulse frequency (speed unit of 0.1 r/min)	0.1 r/min	
023	Speed command (unit of 0.1 r/min)	0.1 r/min	
024	Torque command	0.1 %	
025	Speed limit value	r/min	
026	Speed limit value (unit of 0.1 r/min)	0.1 r/min	
035	Internal temperature of encoder	°C	
03B	Load-side encoder information 1	16 pulse	
03C	Load-side encoder information 2	rev	
04C	U-phase current feedback (unit of the rated current)	0.1 %	
04D	V-phase current feedback (unit of the rated current)	0.1 %	
04E	W-phase current feedback (unit of the rated current)	0.1 %	

Setting value	Data type	Unit *1	Category
201	Servo motor speed +	0.1 r/min	32-bit data
202	Command pulse frequency +	kpulse/s	
203	Command pulse frequency (speed unit) +	0.1 r/min	
204	Droop pulses (1 pulse unit) +	pulse	
205	Speed command +	0.1 r/min	
206	Position within one-revolution +	pulse	
207	Load-side encoder information 1 +	pulse	
208	Load-side encoder information 2 +	rev	
209	Load-side droop pulses +	pulse	
20A*2	Controller position command +	pulse	
20B	Feedback position +	pulse	
20C	Excessive error alarm margin +	pulse	
218	Droop pulses (100 pulse unit) +	100 pulse	
219	Load-side encoder droop pulses (100 pulses unit) +	100 pulse	
21A	Excessive error alarm margin (100 pulses unit) +	100 pulse	
21B	Droop pulses (model position deviation) +	pulse	
21F *2	Motor-side/load-side position deviation (100 pulse unit) +	100 pulse	
220	Speed command 2 +	0.1 r/min	
23C	Droop pulses (command unit) +	pulse	

*1 "mm/s" is used instead of "r/min" for linear servo motors.
*2 Available on servo amplifiers with firmware version D4 or later.
*3 Available only on the MR-J5-_B_-LL servo amplifier.

[Pr. PF87.4-6_Drive recorder - Analog channel 2 selection]

Initial value	Setting range	Ver.
002h	Refer to the text	C4

Select the data to be assigned to analog channel 2 of the drive recorder.

The servo parameter is disabled in the following conditions.

- [Pr. PF80.0 Drive recorder - Operation mode selection] is set to "0" (automatic setting mode)

Refer to the following for values that can be assigned.

☞ Page 121 [Pr. PF87.0-2_Drive recorder - Analog channel 1 selection]

[Pr. PF88_Drive recorder - Analog channel setting 2 (DRAC2)]

Initial value	Setting range	Setting method	Ver.
02040003h	Refer to the relevant detail No.	Each axis	Refer to the relevant detail No.

[Pr. PF88.0-2_Drive recorder - Analog channel 3 selection]

Initial value	Setting range	Ver.
003h	Refer to the text	C4

Select the data to be assigned to analog channel 3 of the drive recorder.

The servo parameter is disabled in the following conditions.

- [Pr. PF80.0 Drive recorder - Operation mode selection] is set to "0" (automatic setting mode)

Refer to the following for values that can be assigned.

☞ Page 121 [Pr. PF87.0-2_Drive recorder - Analog channel 1 selection]

[Pr. PF88.4-6_Drive recorder - Analog channel 4 selection]

Initial value	Setting range	Ver.
204h	Refer to the text	C4

Select the data to be assigned to analog channel 4 of the drive recorder.

The servo parameter is disabled in the following conditions.

- [Pr. PF80.0 Drive recorder - Operation mode selection] is set to "0" (automatic setting mode)

Refer to the following for values that can be assigned.

☞ Page 121 [Pr. PF87.0-2_Drive recorder - Analog channel 1 selection]

[Pr. PF89_Drive recorder - Analog channel setting 3 (DRAC3)]

Initial value	Setting range	Setting method	Ver.
00090205h	Refer to the relevant detail No.	Each axis	Refer to the relevant detail No.

[Pr. PF89.0-2_Drive recorder - Analog channel 5 selection]

Initial value	Setting range	Ver.
205h	Refer to the text	C4

Select the data to be assigned to analog channel 5 of the drive recorder.

The servo parameter is disabled in the following conditions.

- [Pr. PF80.0 Drive recorder - Operation mode selection] is set to "0" (automatic setting mode)

Refer to the following for values that can be assigned.

☞ Page 121 [Pr. PF87.0-2_Drive recorder - Analog channel 1 selection]

[Pr. PF89.4-6_Drive recorder - Analog channel 6 selection]

Initial value	Setting range	Ver.
009h	Refer to the text	C4

Select the data to be assigned to analog channel 6 of the drive recorder.

The servo parameter is disabled in the following conditions.

- [Pr. PF80.0 Drive recorder - Operation mode selection] is set to "0" (automatic setting mode)

Refer to the following for values that can be assigned.

☞ Page 121 [Pr. PF87.0-2_Drive recorder - Analog channel 1 selection]

[Pr. PF90_Drive recorder - Analog channel setting 4 (DRAC4)]

Initial value	Setting range	Setting method	Ver.
0000000Ch	Refer to the relevant detail No.	Each axis	Refer to the relevant detail No.

[Pr. PF90.0-2_Drive recorder - Analog channel 7 selection]

Initial value	Setting range	Ver.
00Ch	Refer to the text	C4

Select the data to be assigned to analog channel 7 of the drive recorder.

The servo parameter is disabled in the following conditions.

- [Pr. PF80.0 Drive recorder - Operation mode selection] is set to "0" (automatic setting mode)

Refer to the following for values that can be assigned.

☞ Page 121 [Pr. PF87.0-2_Drive recorder - Analog channel 1 selection]

[Pr. PF91_Drive recorder - Digital channel setting 1 (DRDC1)]

Initial value	Setting range	Setting method	Ver.
001F0000h	Refer to the relevant detail No.	Each axis	Refer to the relevant detail No.

[Pr. PF91.0-3_Drive recorder - Digital channel 1 selection]

Initial value	Setting range	Ver.
0000h	Refer to the text	C4

Refer to the following table for setting values.

Values not listed below are undefined. Only set the values that are listed in the following table.

Setting value	Symbol	Name	Classification
0000	CSON	Servo-on command	DI
0005	PC	Proportional control	
0006	RES	Reset	
0007	CSV1	Control mode setting 1	
0008	CSV2	Control mode setting 2	
0009	CTL1	Torque limit selection 1	
000A	CTL2	Torque limit selection 2	
0012	EM2/1	Forced stop	
0013	CRDY	Ready-on command	
0016	STO1	STO1	
0017	STO2	STO2	
0019 *1	CSV4	Pressure control mode command	
001A	CDP2	Gain switching selection 2	
001B	CDP	Gain switching selection	
001C	CLD	Fully closed loop selection	
001F	EMG	Controller emergency stop	
0021	CABS	Absolute position reference point data set request	
0022	CZCT	ZCT recreation request	
0026	CSV3	Continuous operation to torque control mode command	

Setting value	Symbol	Name	Classification
8000	RD	Ready	DO
8001	SA	Speed reached	
8002	ZSP	Zero speed detection	
8003	TLC	Limiting torque	
8004	VLC	Limiting speed	
8005	INP	In-position completion	
8007	WNG	Warning	
8008	ALM	Malfunction	
8009	OP	Z-phase output	
800A	MBR	Electromagnetic brake interlock	
800B	DB	External dynamic brake	
800F	BWNG	Battery warning	
8010	ALM2	Malfunction 2	
8011 *3	FR	Coasting	
8013	RDY	In ready-on state	
8015	STO	In STO state	
8016	SMPD	Magnetic pole detection completion	
8017	ZPASS	Z-phase already passed	
8018	CDPS2	Variable gain enabled 2	
8019	CDPS	Variable gain enabled	
801A	CLDS	Fully closed loop control in progress	
801B	ABSV	Absolute position erased	
801C *1	SSV4	Pressure control mode	
801D	IPF	Instantaneous power failure	
801E	SPC	Proportional control in progress	
801F	MTTR	Tough drive in progress	
8020	SSV1	Currently selected control mode 1	
8021	SSV2	Currently selected control mode 2	
8022	STL1	Receiving torque limit selection 1	
8023	STL2	Receiving torque limit selection 2	
8024	SABSE	Incorrect absolute position reference point data set	
8025	SABS	Absolute position reference point data set request completed	
8026	WNGSTOP	Motor stop warning	
8030	FLS	Upper stroke limit input in progress	
8031	RLS	Lower stroke limit input in progress	
8032	DOG	DOG signal input in progress	
8037 *2	SSV3	Continuous operation to torque control mode	
8074 *1	ATM	Pressure model controlled	

*1 Available only on the MR-J5-_B_-LL servo amplifier.
*2 Not available on the MR-J5-_B_-LL servo amplifier.
*3 Available on servo amplifiers with firmware version F0 or later.

[Pr. PF91.4-7_Drive recorder - Digital channel 2 selection]

Initial value	Setting range	Ver.
001Fh	Refer to the text	C4

Refer to the following for values that can be assigned.

☞ Page 125 [Pr. PF91.0-3_Drive recorder - Digital channel 1 selection]

[Pr. PF92_Drive recorder - Digital channel setting 2 (DRDC2)]

Initial value	Setting range	Setting method	Ver.
80058010h	Refer to the relevant detail No.	Each axis	Refer to the relevant detail No.

[Pr. PF92.0-3_Drive recorder - Digital channel 3 selection]

Initial value	Setting range	Ver.
8010h	Refer to the text	C4

Refer to the following for values that can be assigned.

☞ Page 125 [Pr. PF91.0-3_Drive recorder - Digital channel 1 selection]

[Pr. PF92.4-7_Drive recorder - Digital channel 4 selection]

Initial value	Setting range	Ver.
8005h	Refer to the text	C4

Refer to the following for values that can be assigned.

☞ Page 125 [Pr. PF91.0-3_Drive recorder - Digital channel 1 selection]

[Pr. PF93_Drive recorder - Digital channel setting 3 (DRDC3)]

Initial value	Setting range	Setting method	Ver.
8000800Ah	Refer to the relevant detail No.	Each axis	Refer to the relevant detail No.

[Pr. PF93.0-3_Drive recorder - Digital channel 5 selection]

Initial value	Setting range	Ver.
800Ah	Refer to the text	C4

Refer to the following for values that can be assigned.

☞ Page 125 [Pr. PF91.0-3_Drive recorder - Digital channel 1 selection]

[Pr. PF93.4-7_Drive recorder - Digital channel 6 selection]

Initial value	Setting range	Ver.
8000h	Refer to the text	C4

Refer to the following for values that can be assigned.

☞ Page 125 [Pr. PF91.0-3_Drive recorder - Digital channel 1 selection]

[Pr. PF94_Drive recorder - Digital channel setting 4 (DRDC4)]

Initial value	Setting range	Setting method	Ver.
801D8015h	Refer to the relevant detail No.	Each axis	Refer to the relevant detail No.

[Pr. PF94.0-3_Drive recorder - Digital channel 7 selection]

Initial value	Setting range	Ver.
8015h	Refer to the text	C4

Refer to the following for values that can be assigned.

☞ Page 125 [Pr. PF91.0-3_Drive recorder - Digital channel 1 selection]

[Pr. PF94.4-7_Drive recorder - Digital channel 8 selection]

Initial value	Setting range	Ver.
801Dh	Refer to the text	C4

Refer to the following for values that can be assigned.

☞ Page 125 [Pr. PF91.0-3_Drive recorder - Digital channel 1 selection]

[Pr. PF95_Drive recorder - Clear history (**DRCLR)]

Initial value	Setting range	Setting method	Ver.
00000000h	Refer to the relevant detail No.	Each axis	Refer to the relevant detail No.

[Pr. PF95.0_Drive recorder - Clear history selection]

Initial value	Setting range	Ver.
0h	Refer to the text	C4

0: Disabled

1: Enabled

When "0" (enabled) is set, the drive recorder history will be cleared at the next power-on or software reset. After the drive recorder history is cleared, "0" (disabled) will be set to this servo parameter automatically.

1.8 Motor extension setting servo parameters group ([Pr. PL_ _])

[Pr. PL01_Function selection L-1 (**LIT1)]

Initial value	Setting range	Setting method	Ver.
00000301h	Refer to the relevant detail No.	Each axis	Refer to the relevant detail No.

Select a function of the linear servo motor or direct drive motor.

[Pr. PL01.0_Servo motor magnetic pole detection selection]

Initial value	Setting range	Ver.
1h	Refer to the text	C4

Select the magnetic pole detection method for the linear servo motor or direct drive motor.

0: Magnetic pole detection disabled

1: Magnetic pole detection at initial servo-on after cycling the power or after resetting the communication

5: Magnetic pole detection at every servo-on

The setting value "0" for this servo parameter is enabled only for absolute position type encoders.

Do not set any value other than "0", "1", and "5".

This servo parameter is not available for the MR-J5-_B_-LL servo amplifier.

[Pr. PL01.2_Homing stop interval setting]

Initial value	Setting range	Ver.
3h	Refer to the text	C4

Select the stop interval at dog type homing.

This servo parameter is enabled only for linear servo motors.

0: 2^{13} (= 8192) pulses

1: 2^{17} (= 131072) pulses

2: 2^{18} (= 262144) pulses

3: 2^{20} (= 1048576) pulses

4: 2^{22} (= 4194304) pulses

5: 2^{24} (= 16777216) pulses

6: 2^{26} (= 67108864) pulses

This servo parameter is not available for the MR-J5-_B_-LL servo amplifier.

[Pr. PL02_Linear encoder resolution setting - Numerator (**LIM)]

Initial value	Setting range	Setting method	Ver.
1000 [μm]	1 to 65535	Each axis	C4

Set the linear encoder resolution with [Pr. PL02] and [Pr. PL03].

Set a numerator in [Pr. PL02].

This servo parameter is enabled for linear servo motors.

This servo parameter is not available for the MR-J5-_B_-LL servo amplifier.

[Pr. PL03_Linear encoder resolution setting - Denominator (**LID)]

Initial value	Setting range	Setting method	Ver.
1000 [μm]	1 to 65535	Each axis	C4

Set the linear encoder resolution with [Pr. PL02] and [Pr. PL03].

Set a denominator in [Pr. PL03].

This servo parameter is enabled for linear servo motors.

This servo parameter is not available for the MR-J5-_B_-LL servo amplifier.

[Pr. PL04_Function selection L-2 (*LIT2)]

Initial value	Setting range	Setting method	Ver.
00000003h	Refer to the relevant detail No.	Each axis	Refer to the relevant detail No.

Select a function of the linear servo motor or direct drive motor.

[Pr. PL04.0_[AL. 042 Servo control error] detection function selection]

Initial value	Setting range	Ver.
3h	Refer to the text	C4

Refer to the following table for setting values.

Setting value	Thrust/torque deviation error	Speed deviation error	Position deviation error
0	Disabled	Disabled	Disabled
1			Enabled
2		Enabled	Disabled
3			Enabled
4	Enabled	Disabled	Disabled
5			Enabled
6		Enabled	Disabled
7			Enabled

This servo parameter is not available for the MR-J5-_B_-LL servo amplifier.

[Pr. PL04.3_[AL. 042 Servo control error] detection controller reset condition selection]

Initial value	Setting range	Ver.
0h	Refer to the text	C4

0: Reset disabled (reset by powering off/on or software reset enabled)

1: Reset enabled

This servo parameter is not available for the MR-J5-_B_-LL servo amplifier.

[Pr. PL05_Position deviation error detection level (LB1)]

Initial value	Setting range	Setting method	Ver.
0 [mm], [0.01 rev]	0 to 1000	Each axis	C4

Set a position deviation error detection level of the servo control error detection.

When the difference between a model feedback position and actual feedback position is larger than the setting value, [AL. 042.1 Servo control error based on position deviation] will occur.

Note that when "0" is set, the level varies depending on the setting value in [Pr. PA01.1 Operation mode selection].

When a linear servo motor is used: 50 mm

When a direct drive motor is used: 0.09 rev

This servo parameter is not available for the MR-J5-_B_-LL servo amplifier.

[Pr. PL06_Speed deviation error detection level (LB2)]

Initial value	Setting range	Setting method	Ver.
0 [mm/s], [r/min]	0 to 20000	Each axis	C4

Set the speed deviation error detection level of the servo control error detection.

When the difference between a model feedback speed and actual feedback speed is larger than the setting value, [AL. 042.2 Servo control error based on speed deviation] will occur.

Note that when "0" is set, the level varies depending on the setting value in [Pr. PA01.1 Operation mode selection].

When a linear servo motor is used: 1000 mm/s

When a direct drive motor is used: 100 r/min

This servo parameter is not available for the MR-J5-_B_-LL servo amplifier.

[Pr. PL07_Torque deviation error detection level (LB3)]

Initial value	Setting range	Setting method	Ver.
100 [%]	0 to 1000	Each axis	C4

Set the torque/thrust deviation error detection level of the servo control error detection.

When the difference between a current command and current feedback is larger than the setting value, [AL. 042.3 Servo control error based on torque/thrust deviation] occurs.

This servo parameter is not available for the MR-J5-_B_-LL servo amplifier.

[Pr. PL08_Function selection L-3 (*LIT3)]

Initial value	Setting range	Setting method	Ver.
00001010h	Refer to the relevant detail No.	Each axis	Refer to the relevant detail No.

Select a function of the linear servo motor or direct drive motor.

[Pr. PL08.0_Magnetic pole detection method selection]

Initial value	Setting range	Ver.
0h	Refer to the text	C4

0: Position detection method

4: Minute position detection method

If detecting magnetic poles in a vertical axis, configure a system with equipment such as a counterweight to prevent the linear servo motor from moving with the force of gravity.

This servo parameter is not available for the MR-J5-_B_-LL servo amplifier.

[Pr. PL08.2_Magnetic pole detection - Stroke limit enabled/disabled selection]

Initial value	Setting range	Ver.
0h	Refer to the text	C4

0: Enabled

1: Disabled

This servo parameter is not available for the MR-J5-_B_-LL servo amplifier.

[Pr. PL09_Magnetic pole detection voltage level (LPWM)]

Initial value	Setting range	Setting method	Ver.
30 [%]	0 to 100	Each axis	C4

Set a direct current exciting voltage level in the magnetic pole detection.

If [AL. 032 Overcurrent], [AL. 050 Overload 1], or [AL. 051 Overload 2] occurs during the magnetic pole detection, set a smaller value.

If [AL. 027 Initial magnetic pole detection error] occurs during the magnetic pole detection, set a larger value.

This servo parameter is not available for the MR-J5-_B_-LL servo amplifier.

[Pr. PL17_Magnetic pole detection - Minute position detection method - Function selection (LTSTS)]

Initial value	Setting range	Setting method	Ver.
00000000h	Refer to the relevant detail No.	Each axis	Refer to the relevant detail No.

This servo parameter is enabled when [Pr. PL08.0 Magnetic pole detection method selection] is set to "4" (minute position detection method).

[Pr. PL17.0_Response selection]

Initial value	Setting range	Ver.
0h	Refer to the text	C4

Select the responsiveness of the minute position detection method.
To make the travel distance at the magnetic pole detection smaller, set a larger value.
Refer to the following table for setting values.

Setting value of [Pr. PL17.0]	Responsiveness
0	Low response
1	
2	
3	
4	
5	
6	
7	Middle response
8	
9	
A	
B	
C	
D	
E	High response
F	

This servo parameter is not available for the MR-J5-_B_-LL servo amplifier.

[Pr. PL17.1_Load to motor mass ratio/load to motor inertia ratio selection]

Initial value	Setting range	Ver.
0h	Refer to the text	C4

Select a load to mass of the linear servo motor primary-side ratio or load to mass of the direct drive motor inertia ratio used for the minute position detection method. Select a value closest to the actual load.

Refer to the following table for setting values.

Setting value of [Pr. PL17.1]	Load to motor mass ratio/load to motor inertia ratio
0	10 times or less
1	10 multiplier
2	20 multiplier
3	30 multiplier
4	40 multiplier
5	50 multiplier
6	60 multiplier
7	70 multiplier
8	80 multiplier
9	90 multiplier
A	100 multiplier
B	110 multiplier
C	120 multiplier
D	130 multiplier
E	140 multiplier
F	150 times or more

This servo parameter is not available for the MR-J5-_B_-LL servo amplifier.

[Pr. PL18_Magnetic pole detection - Minute position detection method - Identification signal amplitude (IDLV)]

Initial value	Setting range	Setting method	Ver.
0 [%]	0 to 200	Each axis	C4

Set an identification signal amplitude to be used in the minute position detection method.

This servo parameter is enabled when [Pr. PL08.0 Magnetic pole detection method selection] is set to "4".

When the setting value of this servo parameter is "0", the amplitude will be 100 [%].

This servo parameter is not available for the MR-J5-_B_-LL servo amplifier.

1.9 Extension setting 4 servo parameters group ([Pr. PW_ _])

[Pr. PW01_Pressure control gain (APA)]

Initial value	Setting range	Setting method	Ver.
800	0 to 6000	Each axis	E4

Set the proportional gain of the pressure loop.

When the setting value of this servo parameter is "0", the pressure command is "0".

This servo parameter is available only on the MR-J5-_B_-LL servo amplifier.

[Pr. PW02_Pressure integral compensation (AIA)]

Initial value	Setting range	Setting method	Ver.
75 [ms]	1 to 1000	Each axis	E4

Set the integral time constant of the pressure loop.

This servo parameter is available only on the MR-J5-_B_-LL servo amplifier.

[Pr. PW03_Pressure incomplete integral coefficient (ADA)]

Initial value	Setting range	Setting method	Ver.
10000	0 to 10000	Each axis	E4

Set an incomplete integral coefficient of the pressure loop.

When the setting value of this servo parameter is "10000", the proportional integral control is executed.

When the setting value of this servo parameter is "0", the proportional control is executed.

This servo parameter is available only on the MR-J5-_B_-LL servo amplifier.

[Pr. PW12_Function selection W-1 (*WOP1)]

Initial value	Setting range	Setting method	Ver.
00000000h	Refer to the relevant detail No.	Each axis	Refer to the relevant detail No.

[Pr. PW12.1_Selection of pressure increasing direction for positioning address]

Initial value	Setting range	Ver.
0h	Refer to the text	E4

Select the pressure increasing direction for the increase and decrease of the positioning address.

0: The pressure increases as the positioning address decreases.

1: The pressure increases as the positioning address increases.

The following shows the servo motor rotation direction and pressure increasing direction when this parameter is combined with [Pr. PA14 Travel direction selection].

Setting value		Positioning address increasing direction		Positioning address decreasing direction	
[Pr. PW12.1]	[Pr. PA14]	Pressure	Servo motor rotation direction	Pressure	Servo motor rotation direction
0	0	Decrease	CCW	Increase	CW
	1		CW		CCW
1	0	Increase	CCW	Decrease	CW
	1		CW		CCW

This servo parameter is available only on the MR-J5-_B_-LL servo amplifier.

[Pr. PW12.2_Forward/reverse-side stop function]

Initial value	Setting range	Ver.
0h	Refer to the text	E4

Enable or disable the forward/reverse-side stop function.

Setting value	Forward-side stop	Reverse-side stop
0	Enabled	Enabled
1	Enabled	Disabled
2	Disabled	Disabled

To use the forward/reverse-side stop function, the servo system controller that supports this function is required.

When using the controller R64MTCPU/R32MTCPU/R16MTCPU together, set this servo parameter to "1".

If the pressure control axis keeps retracting due to pressure sensor (load cell) errors, set the software stroke limit with the servo system controller. For details, refer to the manual for the servo system controller.

This servo parameter is available only on the MR-J5-_B_-LL servo amplifier.

[Pr. PW13_Function selection W-2 (*WOP2)]

Initial value	Setting range	Setting method	Ver.
00000000h	Refer to the relevant detail No.	Each axis	Refer to the relevant detail No.

[Pr. PW13.0_Pressure control command interpolation]

Initial value	Setting range	Ver.
0h	Refer to the text	E4

Enable or disable the pressure control command interpolation.

0: Disabled (commands from the controller are applied immediately)

1: Enabled (commands from the controller are interpolated before applied)

This servo parameter is available only on the MR-J5-_B_-LL servo amplifier.

[Pr. PW13.1_Speed limit command interpolation]

Initial value	Setting range	Ver.
0h	Refer to the text	E4

Enable or disable the speed limit command interpolation.

0: Disabled (commands from the controller are applied immediately)

1: Enabled (commands from the controller are interpolated before applied)

This servo parameter is available only on the MR-J5-_B_-LL servo amplifier.

[Pr. PW20_Pressure control feedback selection (**LDS)]

Initial value	Setting range	Setting method	Ver.
00000000h	Refer to the relevant detail No.	Each axis	Refer to the relevant detail No.

[Pr. PW20.1_Increasing pressure feedback speed selection]

Initial value	Setting range	Ver.
0h	Refer to the text	E4

Enable or disable increasing pressure feedback speed.

0: Enabled

1: Disabled

When the setting value of this servo parameter is "0 (enabled)", the analog monitor input operates in the one-point mode. AIN0 (pressure feedback) is read at a cycle of 62.5 μs.

When the setting value of this servo parameter is "1 (disabled)", the analog monitor input operates in the three-point mode. AIN0 (pressure feedback) is read at a cycle of 125 μs, and AIN1 (analog monitor input 1) and AIN2 (analog monitor input 2) are read at a cycle of 250 μs.

The setting value "1" of this servo parameter is available on servo amplifiers manufactured from May 2025 onward with firmware version F0 or later. When this servo parameter is set to "1" on a servo amplifier manufactured before May 2025, [AL. 037 Parameter error] occurs.

This servo parameter is available only on the MR-J5-_B_-LL servo amplifier.

[Pr. PW21_Pressure control feedback offset (AFBO)]

Initial value	Setting range	Setting method	Ver.
0 [mV]	-9999 to 9999	Each axis	E4

Set the pressure control feedback offset voltage.

When the setting value of this servo parameter is "100", the pressure control feedback offset voltage is -100 mV.

When the setting value of this servo parameter is "-100", the pressure control feedback offset voltage is +100 mV.

This servo parameter is available only on the MR-J5-_B_-LL servo amplifier.

[Pr. PW22_Pressure control feedback unit constant (AFBD)]

Initial value	Setting range	Setting method	Ver.
20000 [Command unit]	500 to 30000	Each axis	E4

Set the conversion coefficient of the pressure control feedback voltage to be returned to the controller.

Set the pressure control feedback value to be returned to the controller when AIN0 (pressure control feedback) is the maximum input voltage (10 V).

This servo parameter is available only on the MR-J5-_B_-LL servo amplifier.

[Pr. PW23_Analog monitor input 1 offset (AO1)]

Initial value	Setting range	Setting method	Ver.
0 [mV]	-9999 to 9999	Each axis	E4

Set the analog monitor input 1 offset voltage.

When the setting value of this servo parameter is "100", the analog monitor input 1 offset voltage is -100 mV.

When the setting value of this servo parameter is "-100", the analog monitor input 1 offset voltage is +100 mV.

This servo parameter is available only on the MR-J5-_B_-LL servo amplifier.

[Pr. PW24_Analog monitor input 1 unit constant (AD1)]

Initial value	Setting range	Setting method	Ver.
20000 [Command unit]	500 to 30000	Each axis	E4

Set the conversion coefficient of the analog monitor input 1 voltage to be returned to the controller.

When AIN1 (analog monitor input 1 voltage) is the maximum input voltage (10 V), set the value of the analog monitor input 1 to be returned to the controller.

This servo parameter is available only on the MR-J5-_B_-LL servo amplifier.

[Pr. PW25_Analog monitor input 2 offset (AO2)]

Initial value	Setting range	Setting method	Ver.
0 [mV]	-9999 to 9999	Each axis	E4

Set the analog monitor input 2 offset voltage.

When the setting value of this servo parameter is "100", the analog monitor input 2 offset voltage is -100 mV.

When the setting value of this servo parameter is "-100", the analog monitor input 2 offset voltage is +100 mV.

This servo parameter is available only on the MR-J5-_B_-LL servo amplifier.

[Pr. PW26_Analog monitor input 2 unit constant (AD2)]

Initial value	Setting range	Setting method	Ver.
20000 [Command unit]	500 to 30000	Each axis	E4

Set the conversion coefficient of the analog monitor input 2 voltage to be returned to the controller.

When AIN2 (analog monitor input 2 voltage) is the maximum input voltage (10 V), set the value of the analog monitor input 2 to be returned to the controller.

This servo parameter is available only on the MR-J5-_B_-LL servo amplifier.

[Pr. PW27_Analog monitor input filter setting (ADF)]

Initial value	Setting range	Setting method	Ver.
00000000h	Refer to the relevant detail No.	Each axis	Refer to the relevant detail No.

[Pr. PW27.0_AIN0 (pressure feedback) filter time constant]

Initial value	Setting range	Ver.
0h	Refer to the text	E4

Select the filter time constant of AIN0 (pressure feedback). Refer to the following for the filter time constant.

Setting value	Time constant [ms]
0	No filter
1	0.5
2	1
3	2
4	4
5	8
6	16
7	32
8	64
9	128

This servo parameter is available only on the MR-J5-_B_-LL servo amplifier.

[Pr. PW27.1_AIN1 (analog monitor input 1) filter time constant]

Initial value	Setting range	Ver.
0h	Refer to the text	E4

Select the filter time constant of AIN1 (analog monitor input 1).

Refer to the following for setting values.

☞ Page 140 [Pr. PW27.0_AIN0 (pressure feedback) filter time constant]

This servo parameter is available only on the MR-J5-_B_-LL servo amplifier.

[Pr. PW27.2_AIN2 (analog monitor input 2) filter time constant]

Initial value	Setting range	Ver.
0h	Refer to the text	E4

Select the filter time constant of AIN2 (analog monitor input 2).

Refer to the following for setting values.

☞ Page 140 [Pr. PW27.0_AIN0 (pressure feedback) filter time constant]

This servo parameter is available only on the MR-J5-_B_-LL servo amplifier.

[Pr. PW33_Pressure control moving average filter setting (*MAF)]

Initial value	Setting range	Setting method	Ver.
00000000h	Refer to the relevant detail No.	Each axis	Refer to the relevant detail No.

[Pr. PW33.0_AIN0 (pressure feedback) moving average filter time setting]

Initial value	Setting range	Ver.
0h	Refer to the text	E4

Select the moving average filter time setting for AIN0 (pressure feedback).

Setting value	Filter time setting
0	Automatic setting (1.000 ms)
1	No filter
2	0.125 ms
3	0.250 ms
4	0.500 ms
5	1.000 ms
6	2.000 ms
7	4.000 ms

This servo parameter is available only on the MR-J5-_B_-LL servo amplifier.

[Pr. PW33.1_AIN1 (analog monitor input 1) moving average filter time setting]

Initial value	Setting range	Ver.
0h	Refer to the text	E4

Select the moving average filter time setting for AIN1 (analog monitor input 1).

Setting value	Filter time setting
0	Automatic setting (2.000 ms)
1	No filter
2	0.500 ms
3	1.000 ms
4	2.000 ms
5	4.000 ms

This servo parameter is available only on the MR-J5-_B_-LL servo amplifier.

[Pr. PW33.2_AIN2 (analog monitor input 2) moving average filter time setting]

Initial value	Setting range	Ver.
0h	Refer to the text	E4

Select the moving average filter time setting for AIN2 (analog monitor input 2).

Refer to the following for setting values.

☞ Page 141 [Pr. PW33.1_AIN1 (analog monitor input 1) moving average filter time setting]

This servo parameter is available only on the MR-J5-_B_-LL servo amplifier.

[Pr. PW34_Function selection W-5 (*WOP5)]

Initial value	Setting range	Setting method	Ver.
00000000h	Refer to the relevant detail No.	Each axis	Refer to the relevant detail No.

[Pr. PW34.0_Pressure model adaptive control selection]

Initial value	Setting range	Ver.
0h	Refer to the text	E4

Enable or disable the pressure model adaptive control.
This parameter can be set for the combination of the processes of the pressure control. For details on each process of the pressure control, refer to the manual for the servo system controller.
Set this servo parameter to improve the response of the pressure control.

Setting value	Each process of pressure control	
	Dwell operation	Pressure release operation
0	Disabled	Disabled
1	Enabled	Disabled
2	Disabled	Enabled
3	Enabled	Enabled

When setting this servo parameter to a value other than "0", set [Pr. PW03 Pressure incomplete integral coefficient] to "0" to execute the proportional control.
This servo parameter is available only on the MR-J5-_B_-LL servo amplifier.

[Pr. PW35_Pressure model control gain (AMPA)]

Initial value	Setting range	Setting method	Ver.
20	1 to 36000	Each axis	E4

Set the response gain for the pressure command.
Increasing the setting value of this servo parameter improves responsiveness to the pressure command, but increasing the value too much raises the likelihood of an overshoot of the pressure feedback.
When [Pr. PW34.0 Pressure model adaptive control selection] is set to a value other than "0" (disabled), the setting value of this servo parameter is enabled.
This servo parameter is available only on the MR-J5-_B_-LL servo amplifier.

[Pr. PW36_Pressure model control coefficient (AMCEF)]

Initial value	Setting range	Setting method	Ver.
100000	1 to 4294967295	Each axis	E4

Set a pressure model control coefficient.
For the setting method, refer to "Servo parameter adjustment method" in User's Manual (Adjustment).
When [Pr. PW34.0 Pressure model adaptive control selection] is set to a value other than "0" (disabled), the setting value of this servo parameter is enabled.
This servo parameter is available only on the MR-J5-_B_-LL servo amplifier.

2 LISTS OF SERVO PARAMETER SUPPORTED MODES

2.1 Structure

The following shows the meaning of each abbreviation used in the lists. "○" indicates the modes that can be used, and "—" indicates the modes that cannot be used or modes that are not used even if set.

Mode	List abbreviation	Meaning
Operation mode	Standard	Standard control mode
	Linear	Linear servo motor control mode
	DD	Direct drive motor control mode
	Semi closed	Semi closed loop control mode
	Fully closed	Fully closed loop control mode
Control mode	P_SSC	Position control mode
	S_SSC	Speed control mode
	T_SSC	Torque control mode
	pr	Pressure control mode

2.2 Lists of supported control modes

Basic setting servo parameters group ([Pr. PA_ _])

No.	Detail No.	Operation mode				Control mode			
		Semi closed			Fully closed				
		Standard	Linear	DD	Standard	P_SSC	S_SSC	T_SSC	pr
PA01	PA01.1	○	○	○	○	○	○	○	—
	PA01.4	○	—	—	○	○	○	○	—
PA02	PA02.0-1	○	○	○	○	○	○	○	○
	PA02.4	○	○	○	○	○	○	○	○
	PA02.5	○	○	○	○	○	○	○	○
PA03	PA03.0	○	○	○	○	○	○	○	○
	PA03.1	○	—	—	○	○	○	○	○
	PA03.2	○	—	—	—	○	○	○	—
PA04	PA04.2	○	○	○	○	○	○	○	○
	PA04.3	○	○	○	○	○	○	—	—
PA06	—	○	○	○	○	○	○	○	○
PA07	—	○	○	○	○	○	○	○	○
PA08	PA08.0	○	○	○	○	○	○	—	—
	PA08.4	○	○	○	○	○	○	—	—
	PA08.5	○	○	○	○	○	○	—	—
	PA08.6	○	○	○	○	○	○	—	—
PA09	—	○	○	○	○	○	○	—	—
PA10	—	○	○	○	○	○	—	—	—
PA14	—	○	○	○	○	○	○	○	○
PA15	—	○	○	○	○	○	○	○	—
PA16	—	○	○	○	○	○	○	○	—
PA17	—	—	○	○	—	○	○	○	—
PA18	PA18.0-3	—	○	○	—	○	○	○	—
PA20	PA20.1	○	○	○	○	○	○	—	—
	PA20.2	○	○	○	○	○	○	○	○
PA21	PA21.0	○	○	○	○	○	○	—	—
PA22	PA22.1	○	○	○	○	○	—	—	—
	PA22.3	○	○	○	—	○	○	○	—
PA23	PA23.0-1	○	○	○	○	○	○	○	○
	PA23.2-4	○	○	○	○	○	○	○	○
PA24	PA24.0	○	○	○	○	○	○	—	—
PA25	—	○	○	○	○	○	—	—	—
PA26	PA26.0	○	○	○	○	○	○	○	—
PA28	PA28.4	○	○	○	○	○	○	○	○
PA34	—	○	○	○	○	○	○	○	—

Gain/filter setting servo parameters group ([Pr. PB_ _])

No.	Detail No.	Operation mode				Control mode			
		Semi closed			Fully closed				
		Standard	Linear	DD	Standard	P_SSC	S_SSC	T_SSC	pr
PB01	PB01.0	○	○	○	○	○	○	○	—
	PB01.3	○	○	○	○	○	○	—	—
PB02	PB02.0	○	○	○	○	○	—	—	—
	PB02.1	○	○	○	○	○	—	—	—
PB03	—	○	○	○	○	—	—	—	—
PB04	—	○	○	○	○	○	—	—	—
PB06	—	○	○	○	○	○	○	—	○
PB07	—	○	○	○	○	○	○	—	○
PB08	—	○	○	○	○	○	—	—	—
PB09	—	○	○	○	○	○	○	—	○
PB10	—	○	○	○	○	○	○	—	○
PB11	—	○	○	○	○	○	○	—	—
PB12	—	○	○	○	○	○	—	—	—
PB13	—	○	○	○	○	○	○	○	○
PB14	PB14.1	○	○	○	○	○	○	○	○
	PB14.2	○	○	○	○	○	○	○	○
PB15	—	○	○	○	○	○	○	○	○
PB16	PB16.0	○	○	○	○	○	○	○	○
	PB16.1	○	○	○	○	○	○	○	○
	PB16.2	○	○	○	○	○	○	○	○
PB17	PB17.0-1	○	○	○	○	○	○	○	○
	PB17.2	○	○	○	○	○	○	○	○
PB18	—	○	○	○	○	○	○	—	○
PB19	—	○	○	○	○	○	—	—	—
PB20	—	○	○	○	○	○	—	—	—
PB21	—	○	○	○	○	○	—	—	—
PB22	—	○	○	○	○	○	—	—	—
PB23	PB23.0	○	○	○	○	○	○	○	○
	PB23.1	○	○	○	○	○	○	—	○
	PB23.3	○	○	○	○	○	○	○	○
PB24	PB24.0	○	○	○	○	○	—	—	—
	PB24.1	○	○	○	○	○	—	—	—
PB25	PB25.0	○	○	○	○	○	○	—	—
PB26	PB26.0	○	○	○	○	○	○	—	○
	PB26.1	○	○	○	○	○	○	—	○
	PB26.2	○	○	○	○	○	○	—	○
	PB26.4	○	○	○	○	○	○	—	○
	PB26.5	○	○	○	○	○	—	—	—
PB27	—	○	○	○	○	○	○	—	○
PB28	—	○	○	○	○	○	○	—	○
PB29	—	○	○	○	○	○	○	—	○
PB30	—	○	○	○	○	○	—	—	—
PB31	—	○	○	○	○	○	○	—	○
PB32	—	○	○	○	○	○	○	—	○
PB33	—	○	○	○	○	○	—	—	—
PB34	—	○	○	○	○	○	—	—	—
PB35	—	○	○	○	○	○	—	—	—
PB36	—	○	○	○	○	○	—	—	—

No.	Detail No.	Operation mode				Control mode			
		Semi closed			Fully closed				
		Standard	Linear	DD	Standard	P_SSC	S_SSC	T_SSC	pr
PB45	PB45.0-1	○	○	○	○	○	—	—	—
	PB45.2	○	○	○	○	○	—	—	—
PB46	—	○	○	○	○	○	○	○	○
PB47	PB47.0	○	○	○	○	○	○	○	○
	PB47.1	○	○	○	○	○	○	○	○
	PB47.2	○	○	○	○	○	○	○	○
PB48	—	○	○	○	○	○	○	○	○
PB49	PB49.0	○	○	○	○	○	○	○	○
	PB49.1	○	○	○	○	○	○	○	○
	PB49.2	○	○	○	○	○	○	○	○
PB50	—	○	○	○	○	○	○	○	○
PB51	PB51.0	○	○	○	○	○	○	○	○
	PB51.1	○	○	○	○	○	○	○	○
	PB51.2	○	○	○	○	○	○	○	○
PB52	—	○	○	○	○	○	—	—	—
PB53	—	○	○	○	○	○	—	—	—
PB54	—	○	○	○	○	○	—	—	—
PB55	—	○	○	○	○	○	—	—	—
PB56	—	○	○	○	○	○	—	—	—
PB57	—	○	○	○	○	○	—	—	—
PB58	—	○	○	○	○	○	—	—	—
PB59	—	○	○	○	○	○	—	—	—
PB60	—	○	○	○	○	○	○	—	○
PB65	—	○	○	○	○	○	○	—	○
PB66	—	○	○	○	○	○	○	—	○
PB67	—	○	○	○	○	○	○	—	○
PB68	—	○	○	○	○	○	—	—	—
PB69	—	○	○	○	○	○	○	—	○
PB70	—	○	○	○	○	○	○	—	○
PB71	—	○	○	○	○	○	—	—	—
PB72	—	○	○	○	○	○	—	—	—
PB73	—	○	○	○	○	○	—	—	—
PB74	—	○	○	○	○	○	—	—	—
PB75	—	○	○	○	○	○	—	—	—
PB76	—	○	○	○	○	○	—	—	—
PB77	—	○	○	○	○	○	—	—	—
PB78	—	○	○	○	○	○	—	—	—
PB79	—	○	○	○	○	○	○	—	○
PB81	PB81.4	○	○	○	○	○	—	—	—
PB82	—	○	○	○	○	○	—	—	—

Extension setting servo parameters group ([Pr. PC_ _])

No.	Detail No.	Operation mode				Control mode			
		Semi closed			Fully closed				
		Standard	Linear	DD	Standard	P_SSC	S_SSC	T_SSC	pr
PC01	—	○	○	○	○	○	—	—	—
PC02	—	○	○	○	○	○	○	○	○
PC03	PC03.0	○	○	○	○	○	○	○	—
	PC03.1	○	○	○	○	○	○	○	—
	PC03.2	○	○	○	○	○	○	○	—
PC04	PC04.3	○	○	○	○	○	○	○	○
PC05	PC05.0	○	—	—	—	○	○	○	—
	PC05.4	○	○	○	○	○	○	○	○
PC06	PC06.3	○	○	○	○	○	—	—	—
PC07	—	○	○	○	○	○	○	○	○
PC08	—	○	○	○	○	○	○	○	○
PC09	PC09.0-1	○	○	○	○	○	○	○	○
PC10	PC10.0-1	○	○	○	○	○	○	○	○
PC11	—	○	○	○	○	○	○	○	○
PC12	—	○	○	○	○	○	○	○	○
PC17	PC17.0	○	○	○	○	○	—	—	—
	PC17.1	—	○	—	—	○	○	○	—
PC18	PC18.3	○	○	○	○	○	○	○	○
PC19	PC19.4	○	○	○	○	○	○	○	○
	PC19.6	○	○	○	○	○	○	○	○
PC20	PC20.2	○	○	○	○	○	○	○	○
	PC20.4	○	○	○	○	○	○	○	○
PC21	PC21.0	○	○	○	○	○	○	○	○
PC24	—	○	○	○	○	○	○	—	—
PC26	PC26.3	○	○	○	○	○	○	○	—
PC27	PC27.0	○	○	○	○	○	○	○	—
	PC27.2	○	○	○	○	○	○	○	—
PC29	PC29.0	○	—	—	○	○	○	○	○
	PC29.3	○	○	○	○	○	○	○	—
PC31	—	○	○	○	○	○	—	—	—
PC37	PC37.0	○	○	○	○	○	○	○	○
	PC37.3	○	○	○	○	○	○	○	○
PC38	—	○	○	○	○	○	—	—	—
PC84	—	○	○	○	○	○	○	○	○
PC85	—	○	○	○	○	○	○	○	○
PC86	—	○	○	○	○	○	○	○	○
PC87	—	○	○	○	○	○	○	○	○
PC88	—	○	○	○	○	○	○	○	—
PC89	—	○	○	○	○	○	○	○	—
PC90	—	○	○	○	○	○	○	○	—
PC91	—	○	○	○	○	○	○	○	—
PC92	—	○	○	○	○	○	○	○	—
PC93	—	○	○	○	○	○	○	○	—
PC94	—	○	○	○	○	○	○	○	—
PC95	—	○	○	○	○	○	○	○	—
PC96	—	○	—	—	○	○	○	○	○

I/O setting servo parameters group ([Pr. PD_ _])

No.	Detail No.	Operation mode				Control mode			
		Semi closed			Fully closed				
		Standard	Linear	DD	Standard	P_SSC	S_SSC	T_SSC	pr
PD02	PD02.0-7	○	○	○	○	○	○	○	○
PD07	PD07.0-1	○	○	○	○	○	○	○	○
PD08	PD08.0-1	○	○	○	○	○	○	○	○
	PD08.2	○	○	○	○	○	○	○	○
	PD08.3	○	○	○	○	○	○	○	○
PD09	PD09.0-1	○	○	○	○	○	○	○	—
	PD09.2	○	○	○	○	○	○	○	—
	PD09.3	○	○	○	○	○	○	○	—
PD11	PD11.0	○	○	○	○	○	○	○	—
PD12	PD12.3	○	○	○	○	○	○	○	—
PD13	PD13.2	○	○	○	○	○	—	—	—
PD14	PD14.1	○	○	○	○	○	○	○	○
PD15	PD15.0	○	—	—	○	○	○	○	—
	PD15.1	○	—	—	○	○	○	○	—
PD16	—	○	—	—	○	○	○	○	—
PD17	—	○	—	—	○	○	○	○	—
PD20	—	○	—	—	○	○	○	○	—
PD30	—	○	—	—	○	○	○	○	—
PD31	—	○	—	—	○	○	○	○	—
PD32	—	○	—	—	○	○	○	○	—

Extension setting 2 servo parameters group ([Pr. PE_ _])

No.	Detail No.	Operation mode				Control mode			
		Semi closed			Fully closed				
		Standard	Linear	DD	Standard	P_SSC	S_SSC	T_SSC	pr
PE01	PE01.0	—	—	—	○	○	○	○	—
	PE01.4	—	—	—	○	○	○	○	—
PE03	PE03.0	—	—	—	○	○	—	—	—
	PE03.1	—	—	—	○	○	—	—	—
	PE03.3	—	—	—	○	○	—	—	—
PE04	—	—	—	—	○	○	—	—	—
PE05	—	—	—	—	○	○	—	—	—
PE06	—	—	—	—	○	○	○	○	—
PE07	—	—	—	—	○	○	○	○	—
PE08	—	—	—	—	○	○	—	—	—
PE10	PE10.1	—	—	—	○	○	○	○	—
	PE10.2	○	○	○	○	○	—	—	—
	PE10.3	○	○	○	○	○	—	—	—
PE41	PE41.0	○	○	○	○	○	○	○	○
	PE41.6	○	○	○	○	○	○	○	○
PE44	—	○	○	○	○	○	—	—	—
PE45	—	○	○	○	○	○	—	—	—
PE46	—	○	○	○	○	○	—	—	—
PE47	—	○	○	○	○	○	○	○	○
PE48	PE48.0	○	○	○	○	○	—	—	—
	PE48.1	○	○	○	○	○	—	—	—
PE49	—	○	○	○	○	○	—	—	—
PE50	—	○	○	○	○	○	—	—	—
PE51	—	○	○	○	○	○	○	○	—

Extension setting 3 servo parameters group ([Pr. PF_ _])

No.	Detail No.	Operation mode				Control mode			
		Semi closed			Fully closed				
		Standard	Linear	DD	Standard	P_SSC	S_SSC	T_SSC	pr
PF02	PF02.0	○	○	○	○	○	○	○	—
	PF02.4	○	○	○	○	○	○	○	○
	PF02.5	○	○	○	○	○	○	○	○
PF06	PF06.0	○	—	—	○	○	○	○	○
	PF06.1	○	○	○	○	○	○	○	○
PF12	—	○	—	—	○	○	○	○	○
PF18	—	○	○	○	○	○	○	○	○
PF19	—	○	○	○	○	○	○	○	—
PF20	—	○	○	○	○	○	○	○	—
PF21	—	○	○	○	○	○	○	○	○
PF23	—	○	○	○	○	○	○	○	—
PF24	PF24.0	○	○	○	○	○	○	○	○
PF25	—	○	○	○	○	○	○	○	○
PF31	—	○	○	○	○	○	○	○	○
PF34	PF34.0	○	○	○	○	○	○	○	—
	PF34.1	○	○	○	○	○	○	○	—
	PF34.2	○	○	○	○	○	○	○	○
	PF34.5	○	○	○	○	○	○	○	—
	PF34.6	○	○	○	○	○	○	○	—
PF40	PF40.0	○	○	○	○	○	○	○	—
	PF40.1	○	○	○	○	○	○	○	—
	PF40.2	○	○	○	○	○	○	○	—
	PF40.4	○	○	○	○	○	○	○	—
	PF40.5	○	○	○	○	○	○	○	—
PF41	—	○	○	○	○	○	○	○	○
PF42	—	○	○	○	○	○	○	○	—
PF43	—	○	○	○	○	○	○	○	—
PF45	—	○	○	○	○	○	○	○	—
PF46	—	○	○	○	○	○	○	○	—
PF47	—	○	○	○	○	○	○	○	○
PF63	PF63.0	○	○	○	○	○	○	○	○
	PF63.1	○	○	○	—	○	○	○	—
	PF63.2	○	○	○	○	○	○	○	○
PF66	PF66.0-3	○	—	○	○	○	○	—	—
	PF66.4-7	○	—	○	○	○	○	—	—
PF67	—	○	—	○	○	○	○	—	—
PF68	—	○	—	○	○	○	○	—	—
PF69	—	○	○	○	○	○	○	○	—
PF70	—	○	○	○	○	○	○	○	—
PF71	PF71.0	○	○	○	○	○	○	○	○
	PF71.1	○	○	○	○	○	○	○	○
PF72	—	○	—	○	○	○	○	○	○
PF73	—	○	—	○	○	○	○	○	○
PF74	—	○	—	○	○	○	○	○	○
PF75	—	○	—	○	○	○	○	○	○
PF76	—	○	—	○	○	○	○	○	○
PF80	PF80.0	○	○	○	○	○	○	○	○
	PF80.2-3	○	○	○	○	○	○	○	○

No.	Detail No.	Operation mode				Control mode			
		Semi closed			Fully closed				
		Standard	Linear	DD	Standard	P_SSC	S_SSC	T_SSC	pr
PF81	PF81.0	○	○	○	○	○	○	○	○
PF82	PF82.0	○	○	○	○	○	○	○	○
	PF82.1	○	○	○	○	○	○	○	○
	PF82.2	○	○	○	○	○	○	○	○
	PF82.3	○	○	○	○	○	○	○	○
PF83	PF83.0	○	○	○	○	○	○	○	○
PF84	PF84.0-1	○	○	○	○	○	○	○	○
	PF84.2-3	○	○	○	○	○	○	○	○
	PF84.4-5	○	○	○	○	○	○	○	○
PF85	—	○	○	○	○	○	○	○	○
PF86	—	○	○	○	○	○	○	○	○
PF87	PF87.0-2	○	○	○	○	○	○	○	○
	PF87.4-6	○	○	○	○	○	○	○	○
PF88	PF88.0-2	○	○	○	○	○	○	○	○
	PF88.4-6	○	○	○	○	○	○	○	○
PF89	PF89.0-2	○	○	○	○	○	○	○	○
	PF89.4-6	○	○	○	○	○	○	○	○
PF90	PF90.0-2	○	○	○	○	○	○	○	○
PF91	PF91.0-3	○	○	○	○	○	○	○	○
	PF91.4-7	○	○	○	○	○	○	○	○
PF92	PF92.0-3	○	○	○	○	○	○	○	○
	PF92.4-7	○	○	○	○	○	○	○	○
PF93	PF93.0-3	○	○	○	○	○	○	○	○
	PF93.4-7	○	○	○	○	○	○	○	○
PF94	PF94.0-3	○	○	○	○	○	○	○	○
	PF94.4-7	○	○	○	○	○	○	○	○
PF95	PF95.0	○	○	○	○	○	○	○	○

Motor extension setting servo parameters group ([Pr. PL_ _])

No.	Detail No.	Operation mode				Control mode			
		Semi closed			Fully closed				
		Standard	Linear	DD	Standard	P_SSC	S_SSC	T_SSC	pr
PL01	PL01.0	—	○	○	—	○	○	○	—
	PL01.2	—	○	—	—	—	—	—	—
PL02	—	—	○	—	—	○	○	○	—
PL03	—	—	○	—	—	○	○	○	—
PL04	PL04.0	—	○	○	—	○	○	○	—
	PL04.3	—	○	○	—	○	○	○	—
PL05	—	—	○	○	—	○	—	—	—
PL06	—	—	○	○	—	○	○	—	—
PL07	—	—	○	○	—	○	○	○	—
PL08	PL08.0	—	○	○	—	○	○	○	—
	PL08.2	—	○	○	—	○	○	○	—
PL09	—	—	○	○	—	○	○	○	—
PL17	PL17.0	—	○	○	—	○	○	○	—
	PL17.1	—	○	○	—	○	○	○	—
PL18	—	—	○	○	—	○	○	○	—

Extension setting 4 servo parameters group ([Pr. PW_ _])

No.	Detail No.	Operation mode				Control mode			
		Semi closed			Fully closed				
		Standard	Linear	DD	Standard	P_SSC	S_SSC	T_SSC	pr
PW01	—	○	—	—	—	—	—	—	○
PW02	—	○	—	—	—	—	—	—	○
PW03	—	○	—	—	—	—	—	—	○
PW12	PW12.1	○	—	—	—	—	—	—	○
	PW12.2	○	—	—	—	—	—	—	○
PW13	PW13.0	○	—	—	—	—	—	—	○
	PW13.1	○	—	—	—	—	—	—	○
PW20	PW20.1	○	—	—	—	—	—	—	○
PW21	—	○	—	—	—	—	—	—	○
PW22	—	○	—	—	—	—	—	—	○
PW23	—	○	—	—	—	—	—	—	○
PW24	—	○	—	—	—	—	—	—	○
PW25	—	○	—	—	—	—	—	—	○
PW26	—	○	—	—	—	—	—	—	○
PW27	PW27.0	○	—	—	—	—	—	—	○
	PW27.1	○	—	—	—	—	—	—	○
	PW27.2	○	—	—	—	—	—	—	○
PW33	PW33.0	○	—	—	—	—	—	—	○
	PW33.1	○	—	—	—	—	—	—	○
	PW33.2	○	—	—	—	—	—	—	○
PW34	PW34.0	○	—	—	—	—	—	—	○
PW35	—	○	—	—	—	—	—	—	○
PW36	—	○	—	—	—	—	—	—	○

3 LISTS OF SERVO PARAMETER INITIAL VALUES

3.1 Basic setting servo parameters group ([Pr. PA_ _])

No.	Setting method	Initial value
PA01	Each axis	00003000h
PA02	Common	00000000h
PA03	Each axis	00000000h
PA04	Common	00002000h
PA05	—	10000
PA06	Each axis	1
PA07	Each axis	1
PA08	Each axis	00000001h
PA09	Each axis	16
PA10	Each axis	25600
PA11	—	1000.0
PA12	—	1000.0
PA13	—	00000000h
PA14	Each axis	0
PA15	Each axis	4000
PA16	Each axis	1
PA17	Each axis	00000000h
PA18	Each axis	00000000h
PA19	—	000000ABh
PA20	Each axis	00000000h
PA21	Each axis	00000001h
PA22	Each axis	00000000h
PA23	Common	00000000h
PA24	Each axis	00000000h
PA25	Each axis	0
PA26	Each axis	00000000h
PA27	—	00000000h
PA28	Each axis	00000000h
PA29	—	0
PA30	—	0
PA31	—	0
PA32	—	00000001h
PA33	—	0.0
PA34	Each axis	0
PA35	—	00000000h
PA36	—	00000000h
PA37	—	00000000h
PA38	—	00000000h
PA39	—	00000000h
PA40	—	00000000h
PA41	—	00000000h
PA42	—	00000000h
PA43	—	00000000h
PA44	—	00000000h
PA45	—	00000000h

No.	Setting method	Initial value
PA46	—	00000000h
PA47	—	00000000h
PA48	—	00000000h

3.2 Gain/filter setting servo parameters group ([Pr. PB_ _])

No.	Setting method	Initial value
PB01	Each axis	00000000h
PB02	Each axis	00000000h
PB03	Each axis	36000
PB04	Each axis	0
PB05	—	500
PB06	Each axis	7.00
PB07	Each axis	15.0
PB08	Each axis	37.0
PB09	Each axis	823
PB10	Each axis	33.7
PB11	Each axis	980
PB12	Each axis	0
PB13	Each axis	4500
PB14	Each axis	00000000h
PB15	Each axis	4500
PB16	Each axis	00000000h
PB17	Each axis	00000000h
PB18	Each axis	3141
PB19	Each axis	100.0
PB20	Each axis	100.0
PB21	Each axis	0.00
PB22	Each axis	0.00
PB23	Each axis	00001000h
PB24	Each axis	00000000h
PB25	Each axis	00000000h
PB26	Each axis	00000000h
PB27	Each axis	10
PB28	Each axis	1
PB29	Each axis	7.00
PB30	Each axis	0.0
PB31	Each axis	0
PB32	Each axis	0.0
PB33	Each axis	0.0
PB34	Each axis	0.0
PB35	Each axis	0.00
PB36	Each axis	0.00
PB37	—	1600
PB38	—	0.000
PB39	—	0.000
PB40	—	0.000
PB41	—	00000000h
PB42	—	00000000h
PB43	—	00000000h
PB44	—	0.00
PB45	Each axis	00000000h
PB46	Each axis	4500
PB47	Each axis	00000000h
PB48	Each axis	4500

No.	Setting method	Initial value
PB49	Each axis	00000000h
PB50	Each axis	4500
PB51	Each axis	00000000h
PB52	Each axis	100.0
PB53	Each axis	100.0
PB54	Each axis	0.00
PB55	Each axis	0.00
PB56	Each axis	0.0
PB57	Each axis	0.0
PB58	Each axis	0.00
PB59	Each axis	0.00
PB60	Each axis	0.0
PB61	—	0.0
PB62	—	00000000h
PB63	—	00000000h
PB64	—	00000000h
PB65	Each axis	10
PB66	Each axis	1
PB67	Each axis	7.00
PB68	Each axis	0.0
PB69	Each axis	0
PB70	Each axis	0.0
PB71	Each axis	0.0
PB72	Each axis	0.0
PB73	Each axis	0.00
PB74	Each axis	0.00
PB75	Each axis	0.0
PB76	Each axis	0.0
PB77	Each axis	0.00
PB78	Each axis	0.00
PB79	Each axis	0.0
PB80	—	177.0
PB81	Each axis	00000001h
PB82	Each axis	0.0
PB83	—	00000000h
PB84	—	00000000h
PB85	—	00000000h
PB86	—	00000000h
PB87	—	0
PB88	—	00000000h
PB89	—	00000000h
PB90	—	00000000h
PB91	—	00000000h
PB92	—	00000000h
PB93	—	00000000h
PB94	—	00000000h
PB95	—	00000000h
PB96	—	00000000h
PB97	—	00000000h
PB98	—	00000000h
PB99	—	00000000h

3.3 Extension setting servo parameters group ([Pr. PC_ _])

No.	Setting method	Initial value
PC01	Each axis	0
PC02	Each axis	0
PC03	Each axis	00000000h
PC04	Each axis	00000000h
PC05	Each axis	00000000h
PC06	Each axis	00000000h
PC07	Each axis	50
PC08	Each axis	0
PC09	Common	00000000h
PC10	Common	00000001h
PC11	Common	0
PC12	Common	0
PC13	—	0
PC14	—	0
PC15	—	0
PC16	—	00000000h
PC17	Each axis	00000000h
PC18	Common	00000000h
PC19	Each axis	00000000h
PC20	Common	00000000h
PC21	Each axis	00000000h
PC22	—	0
PC23	—	00000000h
PC24	Each axis	100
PC25	—	0
PC26	Each axis	00000050h
PC27	Each axis	00000000h
PC28	—	00000000h
PC29	Each axis	00000000h
PC30	—	0
PC31	Each axis	0
PC32	—	0
PC33	—	0
PC34	—	100
PC35	—	00000000h
PC36	—	00000000h
PC37	Each axis	00000000h
PC38	Each axis	0
PC39	—	0.0
PC40	—	0.0
PC41	—	00000000h
PC42	—	00000000h
PC43	—	0.0
PC44	—	0.0
PC45	—	00000000h
PC46	—	00000000h
PC47	—	00000000h
PC48	—	00000000h

No.	Setting method	Initial value
PC49	—	00000000h
PC50	—	00000000h
PC51	—	00000000h
PC52	—	00000000h
PC53	—	00000000h
PC54	—	00000000h
PC55	—	00000000h
PC56	—	00000000h
PC57	—	00000000h
PC58	—	00000000h
PC59	—	00000000h
PC60	—	00000000h
PC61	—	00000000h
PC62	—	00000000h
PC63	—	00000000h
PC64	—	00000000h
PC65	—	50.00
PC66	—	10
PC67	—	00C00000h
PC68	—	00000000h
PC69	—	10
PC70	—	400
PC71	—	10
PC72	—	20.00
PC73	—	10
PC74	—	10.0
PC75	—	10
PC76	—	00000011h
PC77	—	1000.0
PC78	—	00000000h
PC79	—	00000000h
PC80	—	00000000h
PC81	—	00000000h
PC82	—	0
PC83	—	0
PC84	Each axis	00000000h
PC85	Each axis	00000000h
PC86	Each axis	00000000h
PC87	Each axis	00000000h
PC88	Each axis	00000000h
PC89	Each axis	00000000h
PC90	Each axis	00000000h
PC91	Each axis	00000000h
PC92	Each axis	00000000h
PC93	Each axis	00000000h
PC94	Each axis	00000000h
PC95	Each axis	00000000h
PC96	Each axis	0
PC97	—	00000000h
PC98	—	00000000h
PC99	—	00000000h

3.4 I/O setting servo parameters group ([Pr. PD_ _])

No.	Setting method	Initial value
PD01	—	00000000h
PD02	Each axis	00000000h
PD03	—	00000020h
PD04	—	00000021h
PD05	—	00000022h
PD06	—	00000000h
PD07	Each axis	00000005h
PD08	Common	00000004h
PD09	Common	00000003h
PD10	—	00000000h
PD11	Common	00000007h
PD12	Each axis	00000000h
PD13	Each axis	00000000h
PD14	Each axis	00000000h
PD15	Each axis	00000000h
PD16	Each axis	00000000h
PD17	Each axis	00000000h
PD18	—	00000000h
PD19	—	00000000h
PD20	Each axis	0
PD21	—	0
PD22	—	0
PD23	—	0
PD24	—	00000000h
PD25	—	00000000h
PD26	—	00000000h
PD27	—	00000000h
PD28	—	00000000h
PD29	—	00000000h
PD30	Each axis	0
PD31	Each axis	0
PD32	Each axis	0
PD33	—	00000000h
PD34	—	00000000h
PD35	—	00000000h
PD36	—	00000000h
PD37	—	00110001h
PD38	—	00000000h
PD39	—	00000000h
PD40	—	0
PD41	—	00001000h
PD42	—	00000000h
PD43	—	00000000h
PD44	—	00000000h
PD45	—	00000000h
PD46	—	00000000h
PD47	—	00000000h
PD48	—	00000000h
PD49	—	0
PD50	—	0

No.	Setting method	Initial value
PD51	—	00000000h
PD52	—	00000000h
PD53	—	00000000h
PD54	—	00000000h
PD55	—	00000000h
PD56	—	00000000h
PD57	—	00000000h
PD58	—	00000000h
PD59	—	00000000h
PD60	—	00000000h
PD61	—	00000000h
PD62	—	00000000h
PD63	—	00000000h
PD64	—	00000000h
PD65	—	00000000h
PD66	—	00000000h
PD67	—	00000000h
PD68	—	00000000h
PD69	—	00000000h
PD70	—	00000000h
PD71	—	00000000h
PD72	—	00000000h
PD73	—	00000000h
PD74	—	00000000h
PD75	—	00000000h
PD76	—	00000000h
PD77	—	00000000h
PD78	—	00000000h
PD79	—	00000000h
PD80	—	00000000h
PD81	—	00000000h
PD82	—	00000000h
PD83	—	00000000h
PD84	—	00000000h
PD85	—	00000000h
PD86	—	00000000h
PD87	—	00000000h
PD88	—	00000000h
PD89	—	00000000h
PD90	—	00000000h
PD91	—	00000000h
PD92	—	00000000h
PD93	—	00000000h
PD94	—	00000000h
PD95	—	00000000h
PD96	—	00000000h
PD97	—	00000000h
PD98	—	00000000h
PD99	—	00000000h

3.5 Extension setting 2 servo parameters group ([Pr. PE_ _])

No.	Setting method	Initial value
PE01	—	00000000h
PE02	—	00000000h
PE03	—	00000003h
PE04	—	1
PE05	—	1
PE06	—	400
PE07	—	100
PE08	—	10
PE09	—	00000000h
PE10	—	00000000h
PE11	—	00000000h
PE12	—	00000000h
PE13	—	00000000h
PE14	—	00000111h
PE15	—	20
PE16	—	00000000h
PE17	—	00000100h
PE18	—	00000000h
PE19	—	00000000h
PE20	—	00000000h
PE21	—	00000000h
PE22	—	00000000h
PE23	—	00000000h
PE24	—	00000000h
PE25	—	00000000h
PE26	—	00000000h
PE27	—	00000000h
PE28	—	00000000h
PE29	—	00000000h
PE30	—	00000000h
PE31	—	00000000h
PE32	—	00000000h
PE33	—	00000000h
PE34	—	1
PE35	—	1
PE36	—	0.0
PE37	—	0.00
PE38	—	0.00
PE39	—	20
PE40	—	00000000h
PE41	—	00000000h
PE42	—	0
PE43	—	0.0
PE44	—	0
PE45	—	0
PE46	—	0
PE47	—	0
PE48	—	00000000h

No.	Setting method	Initial value
PE49	—	0
PE50	—	0
PE51	—	0
PE52	—	00000000h
PE53	—	0.0
PE54	—	00000000h
PE55	—	00000000h
PE56	—	00000000h
PE57	—	00000000h
PE58	—	00000000h
PE59	—	00000000h
PE60	—	00000000h
PE61	—	0.000
PE62	—	0.000
PE63	—	0.000
PE64	—	0.000
PE65	—	0.0
PE66	—	0.0
PE67	—	0.0
PE68	—	00000000h
PE69	—	00000000h
PE70	—	0.00
PE71	—	0
PE72	—	1.0000
PE73	—	00000000h
PE74	—	00000000h
PE75	—	00000000h
PE76	—	00000000h
PE77	—	00000000h
PE78	—	0
PE79	—	0
PE80	—	00000000h
PE81	—	00000000h
PE82	—	00000000h
PE83	—	00000000h
PE84	—	00000000h
PE85	—	00000000h
PE86	—	00000000h
PE87	—	00000000h
PE88	—	00000000h
PE89	—	00000000h
PE90	—	00000000h
PE91	—	00000000h
PE92	—	00000000h
PE93	—	00000000h
PE94	—	00000000h
PE95	—	00000000h
PE96	—	00000000h
PE97	—	00000000h
PE98	—	00000000h
PE99	—	00000000h

3.6 Extension setting 3 servo parameters group ([Pr. PF_ _])

No.	Setting method	Initial value
PF01	—	00000000h
PF02	Common	00000000h
PF03	—	00000000h
PF04	—	0
PF05	—	00000000h
PF06	Each axis	00000013h
PF07	—	00000000h
PF08	—	00000000h
PF09	—	00000000h
PF10	—	00000000h
PF11	—	00000000h
PF12	Each axis	2000
PF13	—	00000000h
PF14	—	10
PF15	—	00000000h
PF16	—	00000000h
PF17	—	00000000h
PF18	Common	10
PF19	Each axis	0
PF20	Each axis	0
PF21	Common	0
PF22	—	200
PF23	Each axis	20
PF24	Each axis	00000000h
PF25	Common	200
PF26	—	0
PF27	—	0
PF28	—	0
PF29	Each axis	00000000h
PF30	—	0
PF31	Each axis	0
PF32	—	50
PF33	—	00000000h
PF34	Each axis	00000000h
PF35	—	00000000h
PF36	—	00000000h
PF37	—	00000000h
PF38	—	00000000h
PF39	—	00000000h
PF40	Each axis	00000000h
PF41	Each axis	0
PF42	Each axis	0
PF43	Each axis	0
PF44	—	0
PF45	Each axis	0
PF46	Each axis	0
PF47	Each axis	0
PF48	—	00000000h

No.	Setting method	Initial value
PF49	—	100
PF50	—	100
PF51	—	00000000h
PF52	—	00000000h
PF53	—	0
PF54	—	0
PF55	—	0
PF56	—	0
PF57	—	00000000h
PF58	—	00000000h
PF59	—	00000000h
PF60	—	00000000h
PF61	—	00000000h
PF62	—	00000000h
PF63	Each axis	00000000h
PF64	—	0
PF65	—	00000000h
PF66	Each axis	00000000h
PF67	Each axis	0
PF68	Each axis	0
PF69	Each axis	0
PF70	Each axis	0
PF71	Each axis	00000000h
PF72	Each axis	0
PF73	Each axis	0
PF74	Each axis	0
PF75	Each axis	0
PF76	Each axis	0
PF77	—	00000000h
PF78	—	00000000h
PF79	—	00110010h
PF80	Each axis	00000000h
PF81	Each axis	00000000h
PF82	Each axis	00000000h
PF83	Common	00000000h
PF84	Each axis	005A8101h
PF85	Each axis	0
PF86	Each axis	0
PF87	Each axis	00020201h
PF88	Each axis	02040003h
PF89	Each axis	00090205h
PF90	Each axis	0000000Ch
PF91	Each axis	001F0000h
PF92	Each axis	80058010h
PF93	Each axis	8000800Ah
PF94	Each axis	801D8015h
PF95	Each axis	00000000h
PF96	—	00000000h
PF97	—	00000000h
PF98	—	00000000h
PF99	—	00000000h

3.7 Motor extension setting servo parameters group ([Pr. PL_ _])

No.	Setting method	Initial value
PL01	—	00000301h
PL02	—	1000
PL03	—	1000
PL04	—	00000003h
PL05	—	0
PL06	—	0
PL07	—	100
PL08	—	00001010h
PL09	—	30
PL10	—	5
PL11	—	100
PL12	—	500
PL13	—	00000000h
PL14	—	00000000h
PL15	—	20
PL16	—	0
PL17	—	00000000h
PL18	—	0
PL19	—	0
PL20	—	0
PL21	—	0
PL22	—	0
PL23	—	00000000h
PL24	—	0
PL25	—	0
PL26	—	00000000h
PL27	—	00000000h
PL28	—	00000000h
PL29	—	0
PL30	—	00000000h
PL31	—	00000000h
PL32	—	00000000h
PL33	—	00000000h
PL34	—	00000000h
PL35	—	00000000h
PL36	—	00000000h
PL37	—	00000000h
PL38	—	00000000h
PL39	—	00000000h
PL40	—	00000000h
PL41	—	00000000h
PL42	—	00000000h
PL43	—	00000000h
PL44	—	00000000h
PL45	—	00000000h
PL46	—	00000000h
PL47	—	00000000h
PL48	—	00000000h

No.	Setting method	Initial value
PL49	—	00000000h
PL50	—	0
PL51	—	0
PL52	—	12
PL53	—	0
PL54	—	00000000h
PL55	—	00000000h
PL56	—	00000000h
PL57	—	00000000h
PL58	—	00000000h
PL59	—	00000000h
PL60	—	00000000h
PL61	—	00000000h
PL62	—	00000000h
PL63	—	00000000h
PL64	—	00000000h
PL65	—	00000000h
PL66	—	00000000h
PL67	—	00000000h
PL68	—	00000000h
PL69	—	00000000h
PL70	—	00000000h
PL71	—	00000000h
PL72	—	00000000h
PL73	—	00000000h
PL74	—	00000000h
PL75	—	00000000h
PL76	—	00000000h
PL77	—	00000000h
PL78	—	00000000h
PL79	—	00000000h
PL80	—	00000000h
PL81	—	00000000h
PL82	—	00000000h
PL83	—	00000000h
PL84	—	00000000h
PL85	—	00000000h
PL86	—	00000000h
PL87	—	00000000h
PL88	—	00000000h
PL89	—	00000000h
PL90	—	00000000h
PL91	—	00000000h
PL92	—	00000000h
PL93	—	00000000h
PL94	—	00000000h
PL95	—	00000000h
PL96	—	00000000h
PL97	—	00000000h
PL98	—	00000000h
PL99	—	00000000h

3.8 Extension setting 4 servo parameters group ([Pr. PW_ _])

No.	Setting method	Initial value
PW01	Each axis	800
PW02	Each axis	75
PW03	Each axis	10000
PW04	—	0
PW05	—	0.0
PW06	—	0
PW07	—	0
PW08	—	0
PW09	—	0
PW10	—	0
PW11	—	0
PW12	Each axis	00000000h
PW13	Each axis	00000000h
PW14	—	00000000h
PW15	—	00000000h
PW16	—	00000000h
PW17	—	0
PW18	—	0
PW19	—	0
PW20	Each axis	00000000h
PW21	Each axis	0
PW22	Each axis	20000
PW23	Each axis	0
PW24	Each axis	20000
PW25	Each axis	0
PW26	Each axis	20000
PW27	Each axis	00000000h
PW28	—	0
PW29	—	0.0
PW30	—	0
PW31	—	0
PW32	—	00000000h
PW33	Each axis	00000000h
PW34	Each axis	00000000h
PW35	Each axis	20
PW36	Each axis	100000
PW37	—	0
PW38	—	00000000h
PW39	—	00000000h
PW40	—	00000000h

4 SERVO PARAMETER SETTING METHOD

Servo parameters can be set using the methods shown below. Set the servo parameters using one of these methods.

4.1 Engineering software

Servo parameters can be set using the engineering software manufactured by Mitsubishi Electric such as MR Configurator2. Connect a personal computer and the servo amplifier via a USB cable or a network. For details on how to set servo parameters, refer to Help or the manual for the engineering software.

4.2 Controller

Servo parameters can be set using a controller that is compatible with SSCNET III/H. For details on how to use a controller, refer to the manual for the controller being used.

MEMO

REVISIONS

*The manual number is given on the bottom left of the back cover.

Revision date	*Manual number	Description
July 2022	IB(NA)-0300581ENG-A	First edition
January 2023	IB(NA)-0300581ENG-B	■Servo parameters related to the following function are added: Fully closed loop system
January 2024	IB(NA)-0300581ENG-C	■Servo parameters related to the following function are changed: Regenerative option selection
July 2024	IB(NA)-0300581ENG-D	■Servo parameters related to the following function are added: Pressure control mode
January 2025	IB(NA)-0300581ENG-E	■Servo parameters related to the following function are changed: Regenerative option selection
July 2025	IB(NA)-0300581ENG-F	■Servo parameters related to the following functions are changed: MR-CM08K1 simple converter, dynamic brake release function, drive recorder, pressure control mode
February 2026	IB(NA)-0300581ENG-G	■LM-H4M linear servo motors are added.
October 2026	IB(NA)-0300581ENG-H	Partially changed.

This manual confers no industrial property rights or any rights of any other kind, nor does it confer any patent licenses. Mitsubishi Electric Corporation cannot be held responsible for any problems involving industrial property rights which may occur as a result of using the contents noted in this manual.

© 2022 MITSUBISHI ELECTRIC CORPORATION

WARRANTY

Warranty

1. Warranty period and coverage

We will repair any failure or defect hereinafter referred to as "failure" in our FA equipment hereinafter referred to as the "Product" arisen during warranty period at no charge due to causes for which we are responsible through the distributor from which you purchased the Product or our service provider. However, we will charge the actual cost of dispatching our engineer for an on-site repair work on request by customer in Japan or overseas countries. We are not responsible for any on-site readjustment and/or trial run that may be required after a defective unit is repaired or replaced.

[Term]

For terms of warranty, please contact your original place of purchase.

[Limitations]

(1) You are requested to conduct an initial failure diagnosis by yourself, as a general rule.
It can also be carried out by us or our service company upon your request and the actual cost will be charged. However, it will not be charged if we are responsible for the cause of the failure.

(2) This limited warranty applies only when the condition, method, environment, etc. of use are in compliance with the terms and conditions and instructions that are set forth in the instruction manual and user manual for the Product and the caution label affixed to the Product.

(3) Even during the term of warranty, the repair cost will be charged on you in the following cases;

1. a failure caused by your improper storing or handling, carelessness or negligence, etc., and a failure caused by your hardware or software problem
2. a failure caused by any alteration, etc. to the Product made on your side without our approval
3. a failure which may be regarded as avoidable, if your equipment in which the Product is incorporated is equipped with a safety device required by applicable laws and has any function or structure considered to be indispensable according to a common sense in the industry
4. a failure which may be regarded as avoidable if consumable parts designated in the instruction manual, etc. are duly maintained and replaced
5. any replacement of consumable parts (battery, fan, smoothing capacitor, etc.)
6. a failure caused by external factors such as inevitable accidents, including without limitation fire and abnormal fluctuation of voltage, and acts of God, including without limitation earthquake, lightning and natural disasters
7. a failure generated by an unforeseeable cause with a scientific technology that was not available at the time of the shipment of the Product from our company
8. any other failures which we are not responsible for or which you acknowledge we are not responsible for

2. Term of warranty after the stop of production

(1) We may accept the repair at charge for another seven (7) years after the production of the product is discontinued. The announcement of the stop of production for each model can be seen in our Sales and Service, etc.

(2) Please note that the Product (including its spare parts) cannot be ordered after its stop of production.

3. Service in overseas countries

Our regional FA Center in overseas countries will accept the repair work of the Product. However, the terms and conditions of the repair work may differ depending on each FA Center. Please ask your local FA center for details.

4. Exclusion of loss in opportunity and secondary loss from warranty liability

Regardless of the gratis warranty term, Mitsubishi shall not be liable for compensation to:

(1) Damages caused by any cause found not to be the responsibility of Mitsubishi.

(2) Loss in opportunity, lost profits incurred to the user by Failures of Mitsubishi products.

(3) Special damages and secondary damages whether foreseeable or not, compensation for accidents, and compensation for damages to products other than Mitsubishi products.

(4) Replacement by the user, maintenance of on-site equipment, start-up test run and other tasks.

5. Change of Product specifications

Specifications listed in our catalogs, manuals or technical documents may be changed without notice.

6. Application and use of the Product

(1) For the use of our AC Servo, its applications should be those that may not result in a serious damage even if any failure or malfunction occurs in AC Servo, and a backup or fail-safe function should operate on an external system to AC Servo when any failure or malfunction occurs.

(2) Our AC Servo is designed and manufactured as a general purpose product for use at general industries.
Therefore, applications substantially influential on the public interest for such as atomic power plants and other power plants of electric power companies, and also which require a special quality assurance system, including applications for railway companies and government or public offices are not recommended, and we assume no responsibility for any failure caused by these applications when used.
In addition, applications which may be substantially influential to human lives or properties for such as airlines, medical treatments, railway service, incineration and fuel systems, man-operated material handling equipment, entertainment machines, safety machines, etc. are not recommended, and we assume no responsibility for any failure caused by these applications when used.
We will review the acceptability of the abovementioned applications, if you agree not to require a specific quality for a specific application. Please contact us for consultation.

(3) Mitsubishi Electric shall have no responsibility or liability for any problems involving programmable controller trouble and system trouble caused by DoS attacks, unauthorized access, computer viruses, and other cyberattacks.

TRADEMARKS

MELSERVO is a trademark or registered trademark of Mitsubishi Electric Corporation in Japan and/or other countries.
All other product names and company names are trademarks or registered trademarks of their respective companies.

TRANSLATION OF THE ORIGINAL INSTRUCTIONS

IB(NA)-0300581ENG-H(2610)MEE
MODEL:
MODEL CODE:

MITSUBISHI ELECTRIC CORPORATION
HEAD OFFICE: TOKYO BLDG., 2-7-3, MARUNOUCHI, CHIYODA-KU, TOKYO 100-8310, JAPAN
NAGOYA WORKS: 1-14, YADA-MINAMI 5-CHOME, HIGASHI-KU, NAGOYA 461-8670, JAPAN

When exported from Japan, this manual does not require application to the Ministry of Economy, Trade and Industry for service transaction permission.

Specifications are subject to change without notice.
Compliance with the indicated global standards and regulations is current as of the release date of this manual.