MITSUBISHI ELECTRIC

AC Servo System

MITSUBISHI ELECTRIC SERVO SYSTEM
MELSERVO-J5

MR-J5D-G-N1
User's Manual
(Introduction)

-MR-J5D_-_G_-_N1

SAFETY INSTRUCTIONS

Please read the instructions carefully before using the equipment.
To use the equipment correctly, do not attempt to install, operate, maintain, or inspect the equipment until you have read through this manual, installation guide, and appended documents carefully. Do not use the equipment until you have a full knowledge of the equipment, safety information and instructions.
In this manual, the safety instruction levels are classified into "WARNING" and "CAUTION".

⚠ **WARNING**	Indicates that incorrect handling may cause hazardous conditions, resulting in death or severe injury.
⚠ **CAUTION**	Indicates that incorrect handling may cause hazardous conditions, resulting in medium or slight injury.

Note that the CAUTION level may lead to a serious consequence depending on conditions.
Please follow the instructions of both levels because they are important to personnel safety.
Forbidden actions and required actions are indicated by the following diagrammatic symbols.

⃠	Indicates a forbidden action. For example, "No Fire" is indicated by .
●	Indicates a required action. For example, grounding is indicated by .

In this manual, precautions for hazards that can lead to property damage, instructions for other functions, and other information are shown separately in the "Point" area.
After reading this manual, keep it accessible to the operator.

[Transportation]

⚠ CAUTION

- To prevent injury, transport the products correctly according to their mass.

[Installation/wiring]

⚠ WARNING

- To prevent an electric shock, turn off the power and wait for 20 minutes or more before starting wiring and/or inspection.
- To prevent an electric shock, ground the converter unit/drive unit.
- To prevent an electric shock, any person who is involved in wiring should be fully competent to do the work.
- To prevent an electric shock, mount the converter unit/drive unit before wiring.
- To prevent an electric shock, connect the protective earth (PE) terminal of the converter unit/drive unit to the protective earth (PE) of the cabinet, then connect the grounding lead wire to the ground.
- To prevent an electric shock, do not touch the conductive parts.

[Setting/adjustment]

⚠ WARNING

- To prevent an electric shock, do not operate the switches with wet hands.

[Operation]

⚠WARNING

- To prevent an electric shock, do not operate the switches with wet hands.

[Maintenance]

⚠WARNING

- To prevent an electric shock, any person who is involved in inspection should be fully competent to do the work.
- To prevent an electric shock, do not operate the switches with wet hands.

ABOUT THE MANUAL

If you are using the servo for the first time, prepare and refer to the related manuals as necessary to ensure safe operation of the servo.

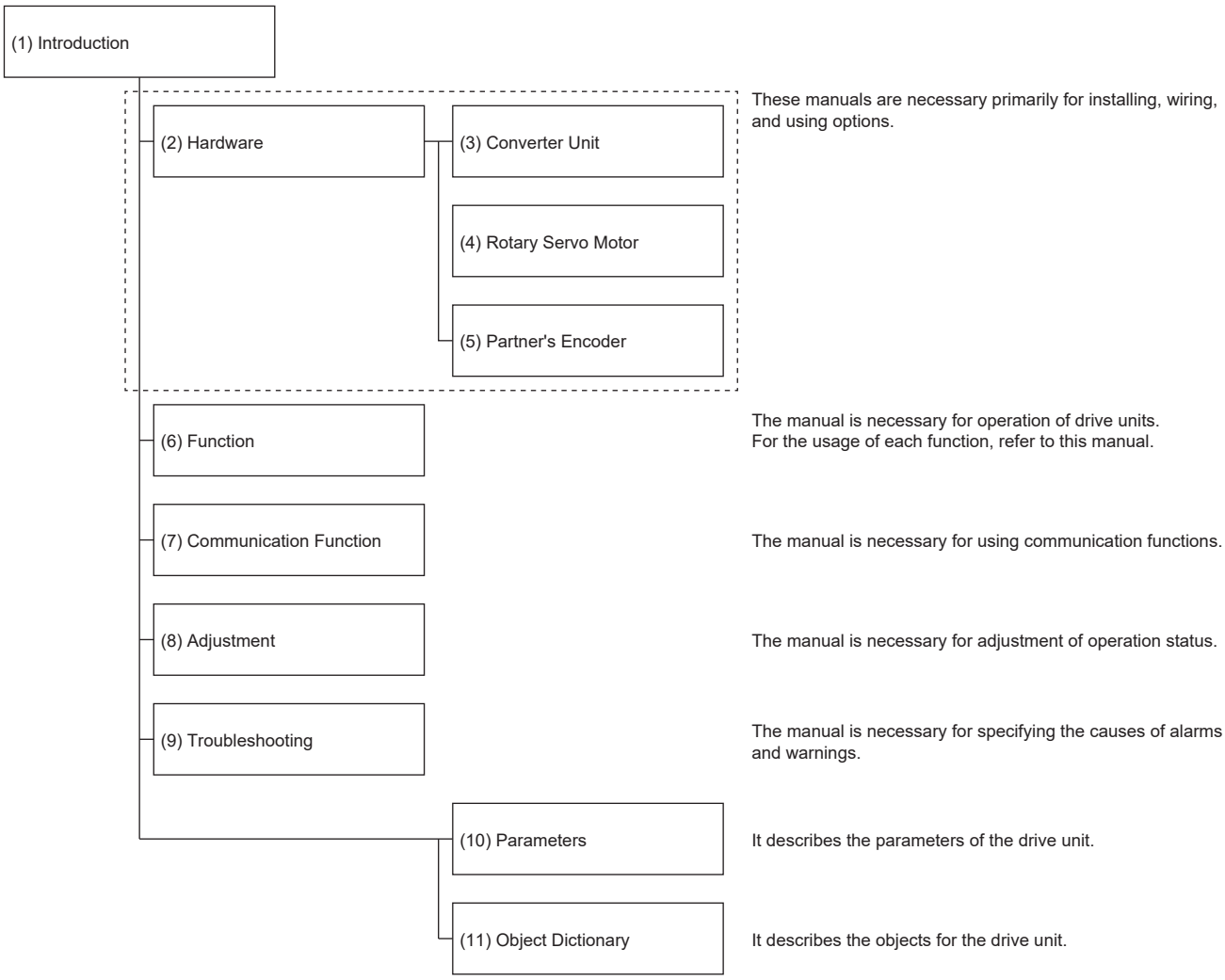

No.	Manual name	Manual No.
(1)	MR-J5D-G-N1 User's Manual (Introduction)	IB(NA)-0300543ENG
(2)	MR-J5D User's Manual (Hardware)	IB(NA)-0300548ENG
(3)	MR-CV Power Regeneration Converter Unit User's Manual	IB(NA)-0300553ENG
(4)	Rotary Servo Motor User's Manual (For MR-J5)	SH(NA)-030314ENG
(5)	MR-J5 Partner's Encoder User's Manual	SH(NA)-030320ENG
(6)	MR-J5 User's Manual (Function)	SH(NA)-030300ENG
(7)	MR-J5-G-N1/MR-J5W-G-N1 User's Manual (Communication Function)	SH(NA)-030371ENG
(8)	MR-J5 User's Manual (Adjustment)	SH(NA)-030306ENG
(9)	MR-J5 User's Manual (Troubleshooting)	SH(NA)-030312ENG
(10)	MR-J5-G/MR-J5W-G User's Manual (Parameters)	SH(NA)-030308ENG
(11)	MR-J5-G-N1/MR-J5W-G-N1 User's Manual (Object Dictionary)	SH(NA)-030376ENG

Interpreting servo parameter numbers

For a servo parameter which uses each digit in hexadecimal to select a function, each digit is indicated by the detail number. For example, the detail number of the last digit is represented as [Pr. PA01.0]. In addition, a servo parameter, which uses a combination of several digits to select a function, is represented using "-" as seen in [Pr. PA01.0-1].
The following shows an example in which the servo parameter number is PA01 and the setting value is represented in hexadecimal as "FEDCBA98".

- When setting a servo parameter using each digit

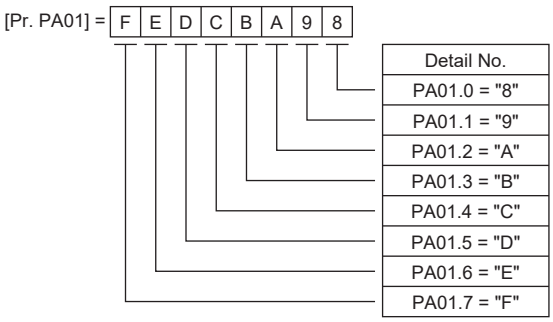

- When setting a servo parameter using a combination of several digits

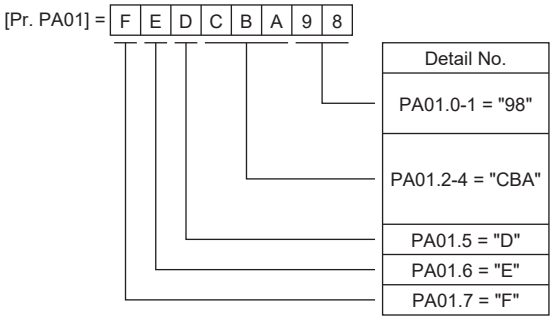

For example, when the servo parameter name is "Function selection A-1", the setting digit name is "Forced stop deceleration function selection", and the servo parameter number is PA04, fourth digit, it is as follows.
[Pr. PA04.3 Forced stop deceleration function selection]

Servo parameter	Symbol	Name	Summary
PA04.3	*AOP	Forced stop deceleration function selection	Enable or disable the forced stop deceleration function. Initial value: 1h (enabled)

Global standards and regulations

Compliance with the indicated global standards and regulations is current as of the release date of this manual. Some standards and regulations may have been modified or withdrawn.

U.S. CUSTOMARY UNITS

U.S. customary units are not shown in this manual. Convert the values if necessary according to the following table.

Quantity	SI (metric) unit	U.S. customary unit
Mass	1 [kg]	2.2046 [lb]
Length	1 [mm]	0.03937 [inch]
Torque	1 [N•m]	141.6 [oz•inch]
Moment of inertia	1 [(× 10^{-4} kg•m^2)]	5.4675 [oz•$inch^2$]
Load (thrust load/axial load)	1 [N]	0.2248 [lbf]
Temperature	N [°C] × 9/5 + 32	N [°F]

CONTENTS

SAFETY INSTRUCTIONS. 1
ABOUT THE MANUAL 3
U.S. CUSTOMARY UNITS 4

CHAPTER 1 SPECIFICATIONS 7

1.1 Outline 7
1.2 Model designation 8
1.3 Drive unit/motor combinations 11
1.4 Drive unit standard specifications 12
MR-J5D1-_G_-N1 12
MR-J5D2-_G_-N1 13
MR-J5D3-_G_-N1 14
Positioning mode 15
Functional safety 16
Environment 19
1.5 Function block diagram 20
MR-J5D1-_G_-N1 20
MR-J5D2-_G_-N1/MR-J5D3-_G_-N1 21
1.6 Configuration including peripheral equipment 22
1.7 Special specifications 23
Drive units without dynamic brake (ED) 23
Special coating specification products (EB) 23

CHAPTER 2 FUNCTION 24

2.1 Restrictions on the MR-J5_-_G_ 24
Restrictions on EtherCAT 24
2.2 Function list 24
2.3 Security 35

CHAPTER 3 STRUCTURE 36

3.1 Parts identification 36
3.2 Switch setting and display of the drive unit 39
Switches 39
7-segment LED 40
Status LEDs. 47
LED display (for EtherCAT) 48
LED display (for EtherNet/IP) 49
LED display (for PROFINET). 50

CHAPTER 4 STARTUP 51

4.1 Turning on drive unit for the first time 59
Network protocol switching methods 59
Test operation of the servo motor alone in test operation mode 63
Equipment configuration setting 64
Controller-related setting 64
Operation by controller command 65
4.2 Instructions on startup 66
4.3 Troubleshooting at startup 66

4.4 Duplicate setting . . . 67
Duplication using MR Configurator2 . . . 67
4.5 Test operation . . . 67
Execution method . . . 67
Test operation mode . . . 68
Motor driving by test operation . . . 69
Motor-less operation . . . 73
Output signal (DO) forced output . . . 74
4.6 Drive unit setting initialization . . . 75
Initialization procedure by MR Mode Change . . . 75

CHAPTER 5 MAINTENANCE, INSPECTION AND PARTS REPLACEMENT 76

5.1 Inspection items . . . 76
Periodic inspection . . . 76
5.2 Parts with a service life . . . 76

CHAPTER 6 COMPLIANCE WITH GLOBAL LAWS AND REGULATIONS 78

6.1 Compliance with global standards . . . 78
6.2 Handling of AC servo amplifier batteries for the United Nations Recommendations on the Transport of Dangerous Goods . . . 78
Target model . . . 78
Purpose . . . 78
Handling during transportation . . . 79
Package at our shipment . . . 80
Transportation precaution for customers . . . 80
6.3 Symbol for EU . . . 81
EU Battery Regulation . . . 81
6.4 Compliance with China Compulsory Certification (CCC) . . . 82
6.5 Compliance with the China RoHS directive . . . 83
REVISIONS . . . 86
WARRANTY . . . 87
TRADEMARKS . . . 88

1 SPECIFICATIONS

1.1 Outline

The MR-J5D_-_G_-N1 is a drive unit to be used with EtherCAT, EtherNet/IP, and PROFINET.
EtherCAT is an abbreviation of Ethernet for Control Automation Technology. It is open network communication between a master station and slave stations via real-time Ethernet developed by Beckhoff Automation GmbH.
EtherNet/IP is an abbreviation of Ethernet Industrial Protocol. It is an open industrial network that uses the TCP/IP protocol and implements CIP (Common Industrial Protocol) as the control protocol in the application layer, and is controlled by ODVA (Open DeviceNet Vendor Association, Inc.).
PROFINET is an automation communication standard defined by PROFIBUS & PROFINET International (PI).
MR-J5D2-_G_-N1 and MR-J5D3-_G_-N1 drive units can drive two or three servo motors with one drive unit. The footprint of MR-J5D2-_G_-N1 and MR-J5D3-_G_-N1 drive units is considerably smaller than that of two or three MR-J5D1-_G_-N1 drive units.

1.2 Model designation

Rating plate

The following shows an example of the rating plate for explanation of each item.

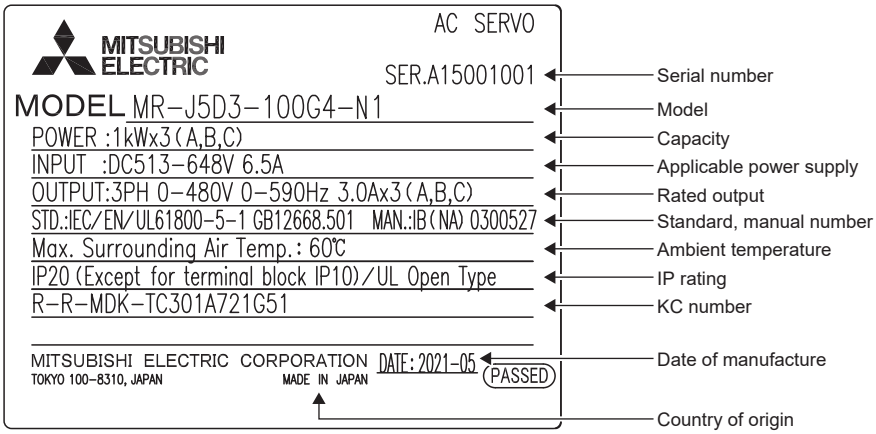

Model

The following describes what each block of a model name indicates. Not all combinations of the symbols are available.

■MR-J5D_-_G_-_N1

MR - J5D1 - 100G4 - EDN1

Series

Number of axes

Symbol	Number of axes
D1	1
D2	2
D3	3

Special specification

Symbol	Special specification
None	Standard
ED	Without dynamic brake
EB	Standard products with a special coating specification

Power supply

Symbol	Power supply
4	3-phase 380 V AC to 480 V AC

Rated output

Symbol	Rated output [kW]		
	A-axis	B-axis *1	C-axis *2
100	1	1	1
200	2	2	2
350	3.5	3.5	-
500	5	5	-
700	7	7	-

*1 For the 2-axis drive unit and 3-axis drive unit.
*2 For the 3-axis drive unit.

Item		Special specifications *1								
		Not attached (standard model)			ED *2			EB *3		
		MR-J5D1	MR-J5D2	MR-J5D3	MR-J5D1	MR-J5D2	MR-J5D3	MR-J5D1	MR-J5D2	MR-J5D3
CN2AL connector		○	×	×	○	×	×	○	×	×
Fully closed loop system Scale measurement function	Two-wire type	○	○	×	○	○	×	○	○	×
	Four-wire type	○	×	×	○	×	×	○	×	×
	A/B/Z-phase differential input	○	×	×	○	×	×	○	×	×
Built-in dynamic brake		○	○	○	×	×	×	○	○	○
FSoE		○ *4	○ *4	○ *4	○ *4	○ *4	○ *4	○ *4	○ *4	○ *4
EtherNet/IP		○ *5	○ *5	○ *5	○ *5	○ *5	○ *5	○ *5	○ *5	○ *5
CIP Safety		○ *6	○ *7	○ *7	○ *6	○ *7	○ *7	○ *6	○ *7	○ *7
PROFINET		○ *8	○ *9	○ *9	○ *8	○ *9	○ *9	○ *8	○ *9	○ *9
Special coating		×	×	×	×	×	×	○	○	○

*1 ○: The corresponding item is included or supported.
×: The corresponding item is not included or not supported.
*2 For details of this special specification, refer to the following.
☞ Page 23 Drive units without dynamic brake (ED)
*3 For details of this special specification, refer to the following.
☞ Page 23 Special coating specification products (EB)
*4 Available on drive units with firmware version D8 or later.
*5 Available on drive units with firmware version E8 or later.
*6 Available on drive units with firmware version F4 or later.
*7 Available on drive units with firmware version F5 or later.
*8 Available on drive units manufactured from December 2025 onward with firmware version F8 or later. Drive units with both the former and new versions may be distributed in the market around the same time depending on the stock status. When considering using PROFINET, contact your local sales office.
*9 Available on drive units manufactured from March 2026 onward with firmware version F8 or later. Drive units with both the previous and new versions may be distributed in the market around the same time depending on the stock status. When considering using PROFINET, contact your local sales office.

■Correspondence table of drive units and special specifications

Drive unit	Special specifications *1		
	None	ED	EB
MR-J5D1-100G4-_N1	○	○	○
MR-J5D1-200G4-_N1	○	○	○
MR-J5D1-350G4-_N1	○	○	○
MR-J5D1-500G4-_N1	○	○	○
MR-J5D1-700G4-_N1	○	○	○
MR-J5D2-100G4-_N1	○	○	○
MR-J5D2-200G4-_N1	○	○	○
MR-J5D2-350G4-_N1	○	○	○
MR-J5D2-500G4-_N1	○	○	○
MR-J5D2-700G4-_N1	○	○	○
MR-J5D3-100G4-_N1	○	○	○
MR-J5D3-200G4-_N1	○	○	○

*1 ○: Supported
×: Not supported

1.3 Drive unit/motor combinations

Refer to "Drive unit/motor combinations" in the following manual.

MR-J5D User's Manual (Hardware)

1.4 Drive unit standard specifications

MR-J5D1-_G_-N1

400 V class

Model: MR-J5D1-_-N1		100G4	200G4	350G4	500G4	700G4
Output	Voltage	3-phase 0 V AC to 480 V AC				
	Rated current [A]	3.0	5.5	8.6	14.0	17.0
Main circuit power supply input		The main circuit power of the drive unit is supplied by the converter unit.				
Control circuit power supply input	Voltage/Frequency	1-phase 380 V AC to 480 V AC, 50 Hz/60 Hz				
	Rated current [A]	0.2				
	Permissible voltage fluctuation	1-phase 323 V AC to 528 V AC				
	Permissible frequency fluctuation	Within ±5 %				
	Power consumption [W]	40				
	Inrush current [A]	Refer to "Inrush currents at power-on of control circuit" in the following manual. MR-J5D User's Manual (Hardware)				
Interface power supply	Voltage	24 V DC ±10 %				
	Current capacity [A]	0.3 (including CN8 connector signals) *1				
Control method		Sine-wave PWM control, current control method				
Dynamic brake		Built-in				
EtherCAT	Communication cycle	125 μs, 250 μs, 500 μs, 1 ms, 2 ms, 4 ms, 8 ms				
EtherNet/IP *3	Cycle time	Select from 1 ms to 100 ms.				
PROFINET *4	Cyclic Communication (Cyclic frame transmission) Cycle times	1 ms, 2 ms, 4 ms, 8 ms, 16 ms, 32 ms, 64 ms, 128 ms, 256 ms, 512 ms				
Communication function	USB	Connection to a personal computer or other devices (MR Configurator2-compatible)				
A/B/Z-phase pulse output		Compatible				
Analog monitor		Two channels				
Fully closed loop control		Supported				
Scale measurement function		Supported				
Load-side encoder interface		Mitsubishi Electric high-speed serial communication/A/B/Z-phase differential input signal				
Protective functions		Overcurrent shut-off, overload shut-off (electronic thermal), servo motor overheat protection, encoder error protection, undervoltage protection, instantaneous power failure protection, overspeed protection, excessive error protection, magnetic pole detection protection, and linear servo control error protection				
Global standards	CE marking	LVD: EN 61800-5-1, EMC: EN 61800-3, MD: EN ISO 13849-1:2015, EN 61800-5-2, EN IEC 62061				
	UKCA marking	LVD: BS EN 61800-5-1, EMC: BS EN IEC 61800-3, MD: BS EN ISO 13849-1:2015, BS EN 61800-5-2, BS EN IEC 62061				
	UL standard	UL 61800-5-1				
Structure (IP rating)		Natural cooling, open (IP20) *2			Force cooling, open (IP20) *2	
Mass [kg]		5.5			4.6	

*1 This value is applicable when all I/O signals are used. Reducing the number of I/O points decreases the current capacity.
*2 IP20 requires a side protection cover (an option).
*3 EtherNet/IP is available on servo amplifiers with firmware version E8 or later.
*4 PROFINET is available on drive units manufactured from December 2025 onward with firmware version F8 or later.

MR-J5D2-_G_-N1

400 V class

Model: MR-J5D2-_-N1		100G4	200G4	350G4	500G4	700G4
Output	Voltage	3-phase 0 V AC to 480 V AC				
	Rated current (each axis) [A]	3.0	5.5	8.6	14.0	17.0
Main circuit power supply input		The main circuit power of the drive unit is supplied by the converter unit.				
Control circuit power supply input	Voltage/Frequency	1-phase 380 V AC to 480 V AC, 50 Hz/60 Hz				
	Rated current [A]	0.2				
	Permissible voltage fluctuation	1-phase 323 V AC to 528 V AC				
	Permissible frequency fluctuation	Within ±5 %				
	Power consumption [W]	40				
	Inrush current [A]	Refer to "Inrush currents at power-on of control circuit" in the following manual. MR-J5D User's Manual (Hardware)				
Interface power supply	Voltage	24 V DC ±10 %				
	Current capacity [A]	0.35 (including CN8 connector signals) *1				
Control method		Sine-wave PWM control, current control method				
Dynamic brake		Built-in				
EtherCAT	Communication cycle	250 μs, 250 μs, 500 μs, 1 ms, 2 ms, 4 ms, 8 ms				
EtherNet/IP *3	Cycle time	Select from 1 ms to 100 ms.				
PROFINET *4	Cyclic Communication (Cyclic frame transmission) Cycle times	1 ms, 2 ms, 4 ms, 8 ms, 16 ms, 32 ms, 64 ms, 128 ms, 256 ms, 512 ms				
Communication function	USB	Connection to a personal computer or other devices (MR Configurator2-compatible)				
A/B/Z-phase pulse output		Compatible (A/B-phase pulse)				
Analog monitor		Two channels				
Fully closed loop control		Supported				
Scale measurement function		Supported				
Load-side encoder interface		Mitsubishi Electric high-speed serial communication				
Protective functions		Overcurrent shut-off, overload shut-off (electronic thermal), servo motor overheat protection, encoder error protection, undervoltage protection, instantaneous power failure protection, overspeed protection, excessive error protection, magnetic pole detection protection, and linear servo control error protection				
Global standards	CE marking	LVD: EN 61800-5-1, EMC: EN 61800-3, MD: EN ISO 13849-1:2015, EN 61800-5-2, EN IEC 62061				
	UKCA marking	LVD: BS EN 61800-5-1, EMC: BS EN IEC 61800-3, MD: BS EN ISO 13849-1:2015, BS EN 61800-5-2, BS EN IEC 62061				
	UL standard	UL 61800-5-1				
Structure (IP rating)		Natural cooling, open (IP20) *2	Force cooling, open (IP20) *2			
Mass [kg]		5.7	5.6		6.2	

*1 This value is applicable when all I/O signals are used. Reducing the number of I/O points decreases the current capacity.
*2 IP20 requires a side protection cover (an option).
*3 EtherNet/IP is available on servo amplifiers with firmware version E8 or later.
*4 PROFINET is available on drive units manufactured from March 2026 onward with firmware version F8 or later.

MR-J5D3-_G_-N1

400 V class

Model: MR-J5D3-_-N1		100G4	200G4
Output	Voltage	3-phase 0 V AC to 480 V AC	
	Rated current (each axis) [A]	3.0	5.5
Main circuit power supply input		The main circuit power of the drive unit is supplied by the converter unit.	
Control circuit power supply input	Voltage/Frequency	1-phase 380 V AC to 480 V AC, 50 Hz/60 Hz	
	Rated current [A]	0.2	
	Permissible voltage fluctuation	1-phase 323 V AC to 528 V AC	
	Permissible frequency fluctuation	Within ±5 %	
	Power consumption [W]	40	
	Inrush current [A]	Refer to "Inrush currents at power-on of control circuit" in the following manual. IB0300548ENG	
Interface power supply	Voltage	24 V DC ±10 %	
	Current capacity [A]	0.45 (including CN8 connector signals) *1	
Control method		Sine-wave PWM control, current control method	
Dynamic brake		Built-in	
EtherCAT	Communication cycle	250 μs, 250 μs, 500 μs, 1 ms, 2 ms, 4 ms, 8 ms	
EtherNet/IP *3	Cycle time	Select from 1 ms to 100 ms.	
PROFINET *4	Cyclic Communication (Cyclic frame transmission) Cycle times	1 ms, 2 ms, 4 ms, 8 ms, 16 ms, 32 ms, 64 ms, 128 ms, 256 ms, 512 ms	
Communication function	USB	Connection to a personal computer or other devices (MR Configurator2-compatible)	
A/B/Z-phase pulse output		Not supported	
Analog monitor		Two channels	
Fully closed loop control		Not supported	
Scale measurement function		Not supported	
Protective functions		Overcurrent shut-off, overload shut-off (electronic thermal), servo motor overheat protection, encoder error protection, undervoltage protection, instantaneous power failure protection, overspeed protection, excessive error protection, magnetic pole detection protection, and linear servo control error protection	
Global standards	CE marking	LVD: EN 61800-5-1, EMC: EN 61800-3, MD: EN ISO 13849-1:2015, EN 61800-5-2, EN IEC 62061	
	UKCA marking	LVD: BS EN 61800-5-1, EMC: BS EN IEC 61800-3, MD: BS EN ISO 13849-1:2015, BS EN 61800-5-2, BS EN IEC 62061	
	UL standard	UL 61800-5-1	
Structure (IP rating)		Natural cooling, open (IP20) *2	Force cooling, open (IP20) *2
Mass [kg]		5.9	5.8

*1 This value is applicable when all I/O signals are used. Reducing the number of I/O points decreases the current capacity.
*2 IP20 requires a side protection cover (an option).
*3 EtherNet/IP is available on servo amplifiers with firmware version E8 or later.
*4 PROFINET is available on drive units manufactured from March 2026 onward with firmware version F8 or later.

Positioning mode

Point table method (CP)

Item		Description
Command interface		Object dictionary
Operation specifications		Positioning by specifying the point table number (255 points)
System		Signed absolute value command method
Position command input	Absolute value command method	Setting in the point table Setting range of feed length for one point: -2147483648 to 2147483647 [μm], -214748.3648 to 214748.3647 [inch], -2147483648 to 2147483647 [pulse], -360.000 to 360.000 [degree]
Speed command input		Set the servo motor speed in the point table. Set the acceleration/deceleration time constants and acceleration/deceleration in the point table. Set the S-pattern acceleration/deceleration time constant in [Pr. PT51]. The speed unit can be selected ([r/min], command unit/s) The acceleration/deceleration unit can be selected ([ms], command unit/s^2)
Torque limit		Setting by the servo parameter or object dictionary
Point table mode (pt)	One positioning operation	Point table number input method Perform one positioning operation based on the position command and speed command.
	Continuous positioning operation	Speed change operation (2nd gear to 255th gear)/ Continuous positioning operation (2 points to 255 points)/ Continuous operation to the point table selected at startup/ Continuous operation to the point table No. 1
JOG operation mode (jg)	JOG operation	Perform inching operation in the network communication function based on the speed command.
Homing mode (hm)		For information on the homing method, refer to "Homing mode (hm)" in the following manual. 📖MR-J5 User's Manual (Function)
Function on positioning operation		Absolute position detection/external limit switch/software position limit/ positioning function to the home position, etc.

Functional safety

Drive unit specifications

Item		Specifications
Safety performance	Standard *1	EN ISO 13849-1:2015 Category 4 PL e, IEC 61508 SIL 3, EN IEC 62061 maximum SIL 3, EN 61800-5-2
	Mean time to dangerous failure (MTTFd)	MTTFd ≥ 100 [years] (750a)
	Diagnostic coverage (DC)	DC = Medium, 96.5 [%]
	Probability of dangerous Failure per Hour (PFH)	PFH = 3×10^{-9} [1/h]
	Mission time (T_M) *2	T_M = 20 [year]

*1 When DI/O connection (CN8) is used, diagnosis by test pulses is required in order to satisfy Category 4 PL e, SIL 3.

*2 Although the special proof tests within the mission time of the safety sub-function is not needed to be performed, the suggested diagnostic test interval in IEC 61800-5-2: 2016 is at least one test per three months for Category 3 PL e, SIL 3.

Function specifications

Item			Specifications
Safety sub-function *1	STO	Shut-off response time (STO input off → energy shut off)	8 ms or less (when an input device is used) 60 ms or less (when a network is used) *5*6*7
	SS1	Deceleration delay time	0 ms to 60000 ms (set by functional safety parameters)
	SS2	Deceleration delay time	0 ms to 60000 ms (set by functional safety parameters)
	SOS	Observation position	0 rev to 1000 rev (set by functional safety parameters)
	SBC	Shut-off response time	8 ms or less (when an input device is used) 60 ms or less (when a network is used) *5*6*7
	SLS1/2/3/4	Observation speed	0 r/min (mm/s) to 10000 r/min (mm/s) (set by functional safety parameters) *4
	SSM	Observation speed	0 r/min (mm/s) to 10000 r/min (mm/s) (set by functional safety parameters)
	SDI	Direction monitor delay time	0 ms to 60000 ms (set by functional safety parameters)
	SLI	Observation position	0 rev to 1000 rev (set by functional safety parameters)
	SLT	Observation torque	-1000.0% to 1000.0% (set by functional safety parameters)
I/O function	Input device	Number of inputs (double wiring)	1 point
		Permissible time for mismatched double inputs	0 ms to 60000 ms (set by functional safety parameters) *8
		Noise elimination filter	1.000 ms to 32.000 ms (set by functional safety parameters)
		Test pulse off time *3	1 ms or less
		Test pulse interval *3	250 ms to 1000 ms
	Output device	Number of outputs (double wiring)	1 point
		Test pulse off time *3	0.500 ms to 2.000 ms (set by functional safety parameters)
		Test pulse interval *3	Within 1 s
Safety communication function		Response time	250 ms *2
		FSoE Watchdog Time	16.0 ms to 65534.0 ms (set by objects) (when a network is used) *7
		Network Time Expectation	16 ms to 5800 ms (set by controller) (when a network is used) *7
		Safety communication delay time	60 ms or less (when a network is used) *5*7

*1 Available functions and safety levels differ depending on the combination of the drive units, the servo motors and firmware version of the drive units.
☞ Page 18 List of safety sub-function compatible units
*2 This value applies when FSoE Watchdog Time or Network Time Expectation is 60.0 ms or less.
*3 A test pulse is a signal which instantaneously turns off a signal to the drive unit at a constant period for external circuits to perform self-diagnosis.
*4 Safety sub-function speed can be set individually.
*5 This value applies when FSoE Watchdog Time or Network Time Expectation is 30.0 ms or less.
*6 For MR-J5D1-_G_-N1, connect to a network with a communication cycle of 250 μs or longer. For MR-J5D2-_G_-N1 or MR-J5D3-_G_-N1, connect to a network with a communication cycle of 500 μs or longer.
*7 This specification applies when the safety sub-functions by a network connection is used.
*8 If it is set to 0 ms, no alarm occurs.

List of safety sub-function compatible units

Drive unit	Function achieving method (wiring destination)	Servo motor type	Safety sub-function (IEC/EN 61800-5-2)										
			STO	SS1		SS2 *3	SOS *3	SBC	SLS *3	SSM *3	SDI *3	SLI *3	SLT
				SS1-t	SS1-r *3	SS2-t, SS2-r							
MR-J5D1-_G_-N1 *5 MR-J5D2-_G_-N1 *2*5 MR-J5D3-_G_-N1 *2*5	DI/O connection *1 (CN8)	Servo motor with functional safety	Cat. 4PL e, SIL 3	Cat. 4PL e, SIL 3	Cat. 4PL e, SIL 3	Cat. 4PL e, SIL 3	Cat. 4PL e, SIL 3	Cat. 4PL e, SIL 3	Cat. 4PL e, SIL 3	Cat. 4PL e, SIL 3	Cat. 4PL e, SIL 3	Cat. 4PL e, SIL 3	Cat. 3PL d, SIL 2
		Rotary servo motor Linear servo motor Direct drive motor	Cat. 4PL e, SIL 3	Cat. 4PL e, SIL 3	Cat. 3PL d, SIL 2	—	—	Cat. 4PL e, SIL 3	Cat. 3PL d, SIL 2	Cat. 3PL d, SIL 2	Cat. 3PL d, SIL 2	—	Cat. 3PL d, SIL 2
	Network connection *4*6 (CN1A/CN1B)	Servo motor with functional safety	Cat. 4PL e, SIL 3	Cat. 4PL e, SIL 3	Cat. 4PL e, SIL 3	Cat. 4PL e, SIL 3	Cat. 4PL e, SIL 3	Cat. 4PL e, SIL 3	Cat. 4PL e, SIL 3	Cat. 4PL e, SIL 3	Cat. 4PL e, SIL 3	Cat. 4PL e, SIL 3	Cat. 3PL d, SIL 2
		Rotary servo motor Linear servo motor Direct drive motor	Cat. 4PL e, SIL 3	Cat. 4PL e, SIL 3	Cat. 3PL d, SIL 2	—	—	Cat. 4PL e, SIL 3	Cat. 3PL d, SIL 2	Cat. 3PL d, SIL 2	Cat. 3PL d, SIL 2	—	Cat. 3PL d, SIL 2

*1 The safety levels in the table apply if the safety sub-function control is performed by test pulse diagnosis using a safety CPU or a safety controller that complies with Category 4 PL e and SIL 3. If the drive units are directly connected with emergency stop switches, safety switches, enabling switches, or other similar devices and test pulse diagnosis is not performed, the safety level Category 3 PL d, SIL 2 applies.

*2 STO can be set separately for each axis.

*3 Fully closed loop control systems do not support SS1-r, SS2, SOS, SLS, SSM, SDI, and SLI.

*4 For MR-J5D1-_G_-N1, connect to a network with a communication cycle of 250 μs or longer. For MR-J5D2-_G_-N1 or MR-J5D3-_G_-N1, connect to a network with a communication cycle of 500 μs or longer.

*5 SS1-r, SS2, SOS, SLS, SSM, SDI and SLI can be used on drive units with the firmware version D8 or later.

*6 The availability of the safety sub-functions via network connection is as follows.

☞ Page 18 Safety sub-functions via network connection

■Safety sub-functions via network connection

Network		Available firmware version
EtherCAT		D8 or later
EtherNet/IP	1-axis drive unit	F4 or later
	Multi-axis drive unit	F5 or later
PROFINET		Not supported

Environment

Item		Operation	Transportation	Storage
Ambient temperature		0 ˚C to 60 ˚C (non-freezing) Class 3K3 (IEC 60721-3-3)	-25 ˚C to 70 ˚C (non-freezing) Class 2K12 (IEC 60721-3-2)	-25 ˚C to 70 ˚C (non-freezing) Class 1K4 (IEC 60721-3-1)
Ambient humidity		5 %RH to 95 %RH (non-condensing)	5 %RH to 95 %RH (non-condensing)	5 %RH to 95 %RH (non-condensing)
Ambience		Indoors (no direct sunlight); no corrosive gas, inflammable gas, oil mist or dust		
Altitude/atmospheric pressure		Altitude: 2000 m or less *1	Transportation conditions: Must be transported by ground/sea, or air at an atmospheric pressure of 700 hPa or more.	Atmospheric pressure: 700 hPa to 1060 hPa (equivalent to the altitude of -400 m to 3000 m.)
Vibration resistance		Under intermittent vibration: 10 Hz to 57 Hz, displacement amplitude 0.075 mm 57 Hz to 150 Hz, acceleration amplitude 9.8 m/s^2 Class 3M1 (IEC 60721-3-3) Under continuous vibration (X, Y, Z axes): 10 Hz to 55 Hz, acceleration amplitude 5.9 m/s^2	2 Hz to 9 Hz, displacement amplitude (half amplitude) 7.5 mm 9 Hz to 200 Hz, acceleration amplitude 20 m/s^2 Class 2M3 (IEC 60721-3-2)	2 Hz to 9 Hz, displacement amplitude (half amplitude) 1.5 mm 9 Hz to 200 Hz, acceleration amplitude 5 m/s^2 Class 1M2 (IEC 60721-3-1)
Dielectric strength	400 V class	Between main circuit (power supply/power terminal) and PE: 2000 V AC, 1 minute, 50 Hz/60 Hz		
Insulation resistance		Between main circuit (power supply/power terminal) and PE: 0.5 MΩ or more (with a 500 V DC megger)		

*1 Refer to "Restrictions when using this product at altitude exceeding 1000 m and up to 2000 m" in the following manual for using the product at altitude exceeding 1000 m.
MR-J5D User's Manual (Hardware)

1.5 Function block diagram

The following shows the function block diagram of this drive unit.

MR-J5D1-_G_-N1

400 V class

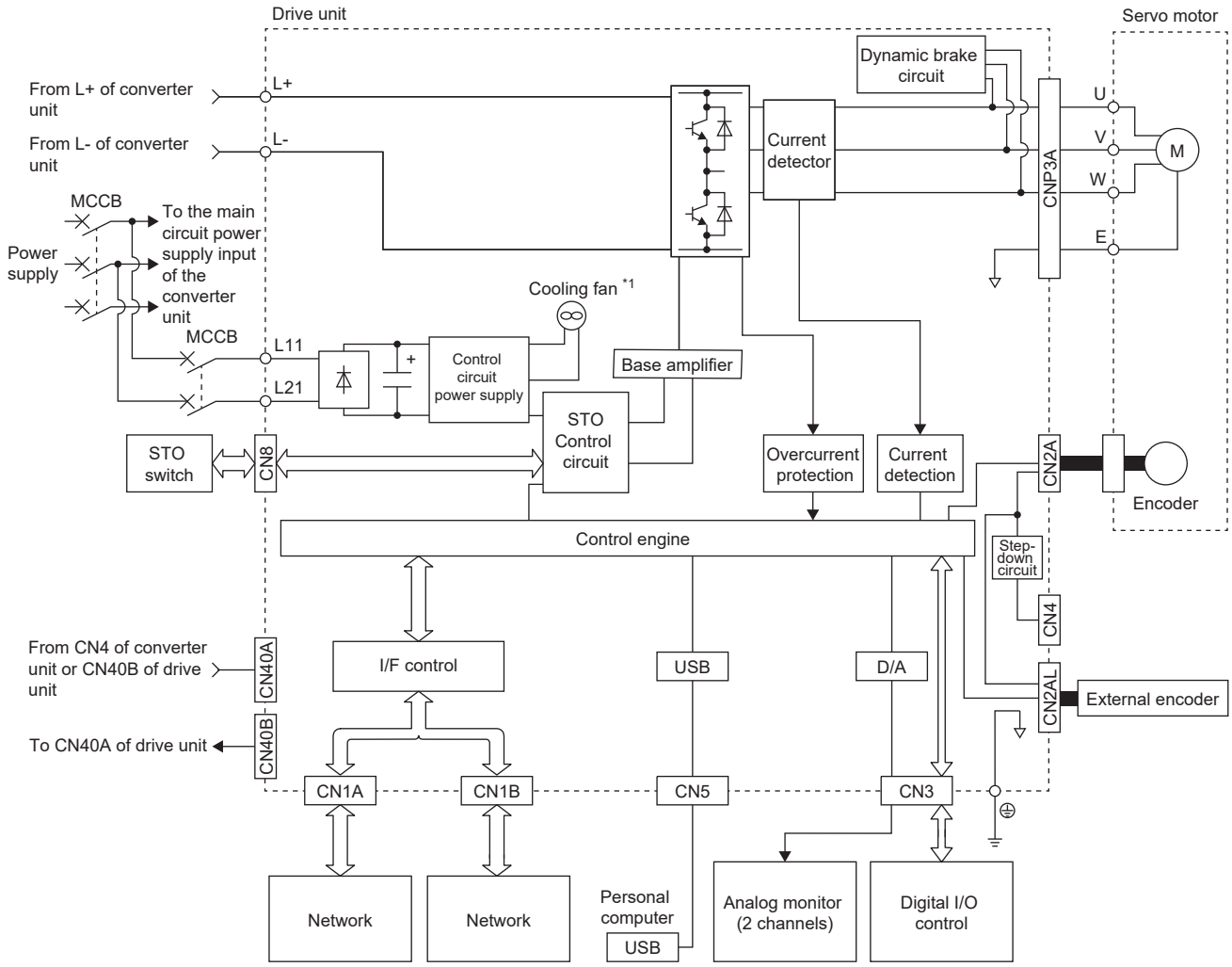

*1 Drive units with the rated output symbol of 500 (MR-J5D1-500G4-N1) or greater have a cooling fan.

400 V class

The following is an example using MR-J5D3-_G_-N1.

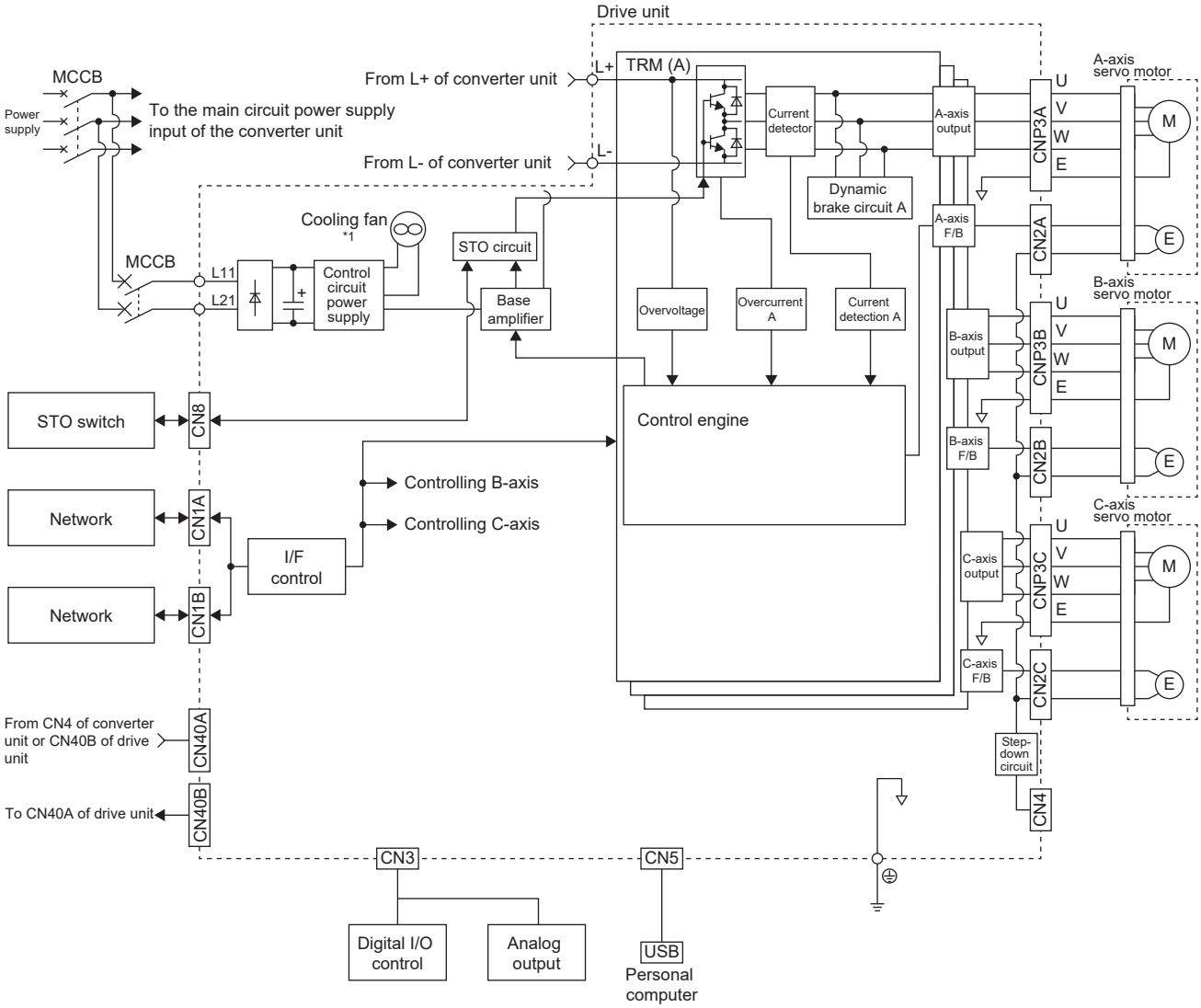

*1 Drive units other than the MR-J5D2-100G4-N1 and MR-J5D3-100G4-N1 have a cooling fan.

1.6 Configuration including peripheral equipment

- To prevent a malfunction, do not connect these connectors to any network other than the specified network.
- Equipment other than the converter unit, drive unit and servo motor is optional or a recommended product.

The following is an example using MR-J5D1-100G4-N1 and MR-CV11K4.

In the actual connection, the power regeneration converter unit is closely mounted to the drive unit.

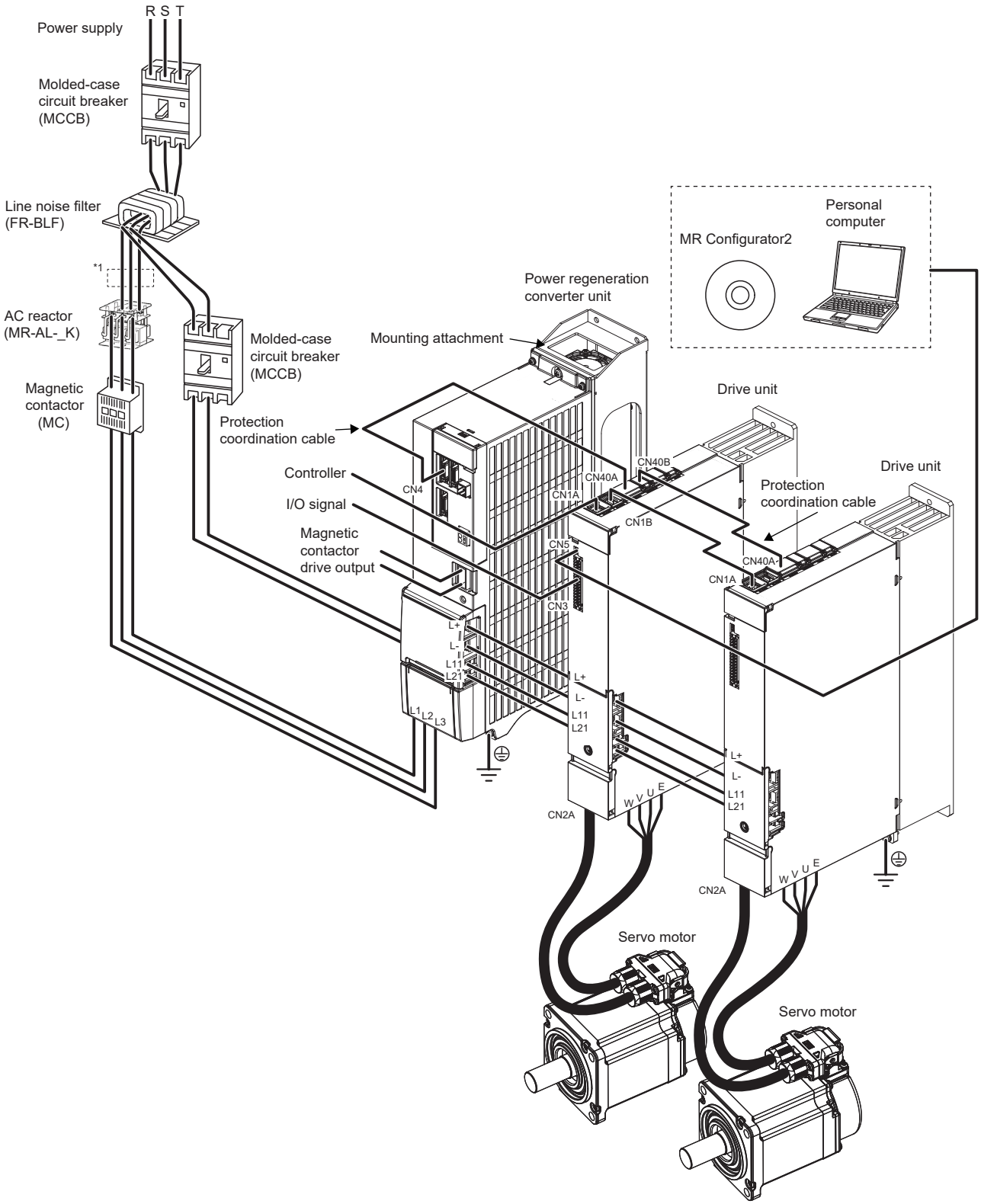

*1 When using the same power supply for the main circuit and cooling fan for MR-CV_, do not supply power between the MR-CV_ and AC reactor or to the inductive load from the secondary side of the magnetic contactor. Connect them closer to the power supply side than the broken line area.

1.7 Special specifications

Drive units without dynamic brake (ED)

Summary

This section describes the drive units without dynamic brake. Items not described in this section are the same as the MR-J5D_-_G_-N1.

Specifications

The built-in dynamic brakes of the drive units are removed.
Take safety measures such as providing an extra circuit in case of an emergency stop, alarm, and servo motor stop at power supply shut-off.
When specific servo motors are being used, the electronic dynamic brake may be activated at an alarm occurrence.
For the specific servo motors, refer to "Precautions relating to the dynamic brake characteristics" in the following manual.
📖MR-J5D User's Manual (Hardware)
Setting the following servo parameter disables the electronic dynamic brake.

Drive unit	Servo parameter	Setting value
MR-J5D_-_G_-EDN1	[Pr. PF06.0]	2

When [Pr. PA04.3] is set to "2" (initial value), the forced stop deceleration function may be executed at an alarm occurrence.
Setting [Pr. PA04.3] to "0" disables the forced stop deceleration function.

Special coating specification products (EB)

Summary

This section describes the drive units with the special coating specification. Items not described in this section are the same as those of the MR-J5D_-_G_-N1.

Specifications

■Special coating

Using the MR-J5 series in the atmosphere containing corrosive gases may result in malfunction due to corrosion over time. For products with the special coating specification, coating material is applied to the areas of the printed circuit boards in the drive units where it can technically be applied (excluding connectors and terminal boards) to improve resistance to corrosive gases. In particular, use special coating specification products for applications that tend to be affected by corrosive gases, such as tire manufacturing and water treatment. The resistance to corrosive gases of the special coating specification products is enhanced, however, it does not guarantee the use of the products in such environments. Inspect the products regularly to check for any abnormalities.

■Corrosive gases

According to JIS C60721-3-3/IEC 60721-3-3, corrosive gases refer to sea salt, sulfur dioxide, hydrogen sulfide, chlorine, hydrogen chloride, hydrogen fluoride, ammonia, ozone, and nitrogen oxides.
The special coating specification products have improved resistance to corrosion in environments with corrosive gases. Compared to the standard products, enhanced resistance to corrosive gases has been confirmed in a representative model.

2 FUNCTION

2.1 Restrictions on the MR-J5_-_G_

Restrictions on EtherCAT

Category	Detailed functions	Network communication cycle restrictions (minimum)		
		MR-J5D1-_G_-N1	MR-J5D2-_G_-N1	MR-J5D3-_G_-N1
Control mode	Profile position mode (pp)	250 μs	500 μs	500 μs
	Profile velocity mode (pv)	250 μs	500 μs *1	500 μs *1
	Profile torque mode (tq)	250 μs	500 μs *1	500 μs *1
	Point table method ([Pr. PA01.0 Control mode selection] = "6")	250 μs	500 μs	500 μs
Functional safety	Safety sub-function control by network ([Pr. PSA01.1 Input mode selection] = "1")	250 μs	500 μs	500 μs
	Monitor the position/speed using a servo motor with functional safety. ([Pr. PSA02.1 Position/Speed monitor setting] = "1")	250 μs	500 μs	500 μs
—	Command unit selection function (When [Pr. PT01.2 Unit for position data] is set to "2" (degree))	250 μs	500 μs	500 μs

*1 Available on drive units with firmware version E8 or later.

2.2 Function list

The function list of this drive unit is shown in the following table. For details of the functions, refer to each section indicated in the detailed explanation field.

Control mode

Functions	Detailed functions	Description	Ver. *1	Detailed explanation
CiA 402 control mode	Cyclic synchronous position mode (csp) *3	This function operates the servo motor in the cyclic synchronous position mode.	C0	Refer to "CONTROL MODE" in the following manual. 📖MR-J5 User's Manual (Function)
	Cyclic synchronous velocity mode (csv) *3	This function operates the servo motor in the cyclic synchronous velocity mode.	C0	
	Cyclic synchronous torque mode (cst) *3	This function operates the servo motor in the cyclic synchronous torque mode.	C0	
	Profile position mode (pp)	This function operates the servo motor in the profile position mode.	C0	
	Profile velocity mode (pv) *2	This function operates the servo motor in the profile velocity mode.	C0	
	Profile torque mode (tq) *2	This function operates the servo motor in the profile torque mode.	C0	
	Homing mode (hm)	This function either operates the servo motor in the homing mode or performs homing.	C0	
Point table method	Point table mode (pt) *3	This function operates the servo motor according to the setting values by selecting the point table with preset 255 points.	C0	
	JOG operation mode (jg) *3	This control mode enables desired positioning for machine adjustment and home positioning.	C0	
Test operation	Test operation mode	This function requires MR Configurator2 for JOG operation, positioning operation, motor-less operation, DO forced output, and program operation.	C0	☞ Page 67 Test operation

*1 "Ver." indicates the supported firmware version of the drive unit. The functions are available on drive units with the indicated firmware version or later.
*2 This control mode is not available for multi-axis drive units.
*3 When the command interface is EtherNet/IP or PROFINET, this control mode is not available.

Drive motor

Functions	Detailed functions	Description	Ver. *1	Detailed explanation
Servo motor	Linear servo motor	Using the linear servo motor and linear encoder enables the linear servo system to be configured.	C0	—
	Direct drive motor	Using this function enables the direct drive servo system to be configured to drive the direct drive motor.	C0	—
Encoder	High-resolution encoder	A 67108864 pulses/rev high-resolution encoder is used for the encoder of the rotary servo motor.	C0	—
	Batteryless absolute position encoder	The rotation position of the servo motor can be backed up without the battery. Using the servo motor with this encoder enables an absolute value detection system to be configured without battery.	C0	Refer to "ABSOLUTE POSITION DETECTION SYSTEM" in the following manual. MR-J5D User's Manual (Hardware)

*1 "Ver." indicates the supported firmware version of the drive unit. The functions are available on drive units with the indicated firmware version or later.

Network

Functions	Detailed functions	Description	Ver. *1	Detailed explanation
Open network	EtherCAT	This function connects the drive unit to equipment such as a controller through EtherCAT communication.	C0	MR-J5-G-N1/MR-J5W-G-N1 User's Manual (Communication Function)
	EtherNet/IP	This function connects the drive unit to equipment such as a controller through EtherNet/IP communication.	E8	
	PROFINET	This function connects the drive unit to equipment such as a controller through PROFINET communication.	F8	

*1 "Ver." indicates the supported firmware version of the drive unit. The functions are available on drive units with the indicated firmware version or later.

Position detection

Functions	Detailed functions	Description	Ver. *1	Detailed explanation
Control method	Semi closed loop system	This function uses the servo motor encoder to configure semi closed loop systems.	C0	—
	Fully closed loop system	This function uses the load-side encoder to configure fully closed loop systems.	C0	Refer to "USING A FULLY CLOSED LOOP SYSTEM" in the following manual. MR-J5D User's Manual (Hardware)
	Scale measurement function	This function connects the scale measurement encoder in the state of the semi closed loop control to transmit the position information of the scale measurement encoder to the controller.	C0	Refer to "Scale measurement function" in the following manual. MR-J5 User's Manual (Function)
Absolute position	Absolute position detection system	This function performs homing once, and thereafter does not require homing at every power-on.	C0	Refer to "ABSOLUTE POSITION DETECTION SYSTEM" in the following manual. MR-J5D User's Manual (Hardware)

*1 "Ver." indicates the supported firmware version of the drive unit. The functions are available on drive units with the indicated firmware version or later.

Operation function

Functions	Detailed functions	Description	Ver. *1	Detailed explanation
Stop function	Quick Stop	This function stops the servo motor with a specified method and switches to the servo-off status.	C0	Refer to "Quick stop" in the following manual. MR-J5 User's Manual (Function)
	Halt	This function stops the servo motor while the servo-on status is maintained.	C0	Refer to "Halt" in the following manual. MR-J5 User's Manual (Function)
	Stroke limit function	This function uses LSP (Forward rotation stroke end) and LSN (Reverse rotation stroke end) to limit the travel interval of the servo motor.	C0	Refer to "Stroke limit function" in the following manual. MR-J5 User's Manual (Function)
	Software position limit	This function uses servo parameters to limit the travel intervals by address. A function equivalent to the stroke limit function can be set with the servo parameter.	C0	Refer to "Software position limit" in the following manual. MR-J5 User's Manual (Function)
Command generation	Rotation/travel direction selection	This function sets the rotation direction of the servo motor without changing the command polarity.	C0	Refer to "Rotation/travel direction selection" in the following manual. MR-J5 User's Manual (Function)
	Electronic gear	This function performs positioning control with the value obtained by multiplying the position command from the upper controller by a set electronic gear ratio.	C0	Refer to "Electronic gear function" in the following manual. MR-J5 User's Manual (Function)
	Acceleration/deceleration function	This function enables smooth acceleration/deceleration.	C0	Refer to "Acceleration/deceleration function" in the following manual. MR-J5 User's Manual (Function)
	S-pattern acceleration/deceleration time constant	This function performs smooth acceleration and deceleration.	C0	Refer to "S-pattern acceleration/deceleration time constant" in the following manual. MR-J5 User's Manual (Function)
	Torque limit	This function limits the servo motor torque.	C0	Refer to "Torque limit" in the following manual. MR-J5 User's Manual (Function)
	Speed limit	This function limits the servo motor speed in the torque control mode.	C0	Refer to "Speed limit" in the following manual. MR-J5 User's Manual (Function)
	Command offset	This function compensates the position/speed/torque commands by adding a desired amount of offset to the commands.	C0	Refer to "Command offset" in the following manual. MR-J5 User's Manual (Function)

*1 "Ver." indicates the supported firmware version of the drive unit. The functions are available on drive units with the indicated firmware version or later.

Positioning function

Functions	Detailed functions	Description	Ver. *1	Detailed explanation
Override function	Override function	This function can change the servo motor speed via communication. The value can be changed to 0% to 360% of the set speed.	D4	Refer to "Override function" in the following manual. 📖MR-J5 User's Manual (Function)
Absolute position	Infinite feed function	In an absolute position detection system, even if the servo motor rotates 32768 rev or more in the same direction, [AL. 0E3.1 Multi-revolution counter travel distance exceeded warning] will not occur and the home position will not be erased. Therefore, the current position will be restored after the power is cycled. When this function is not used, if the servo motor rotates 32768 rev or more in the same direction, [AL. 0E3.1] will occur and the home position will be erased.	D0	Refer to "Infinite feed function" in the following manual. 📖MR-J5-G-N1/MR-J5W-G-N1 User's Manual (Communication Function)

*1 "Ver." indicates the supported firmware version of the servo amplifier. The functions are available on servo amplifiers with the indicated firmware version or later.

Control function

Functions	Detailed functions	Description	Ver. *1	Detailed explanation
Vibration suppression	Advanced vibration suppression control II	This function suppresses vibration and residual vibration at an arm end.	C0	Refer to "Advanced vibration suppression control II" in the following manual. 📖MR-J5 User's Manual (Adjustment)
	Machine resonance suppression filter	This function decreases the gain of the specific frequency to suppress the resonance of the mechanical system.	C0	Refer to "Machine resonance suppression filter" in the following manual. 📖MR-J5 User's Manual (Adjustment)
	Shaft resonance suppression filter	When driving the servo motor with a load mounted to the servo motor shaft, resonance due to shaft torsion may generate high frequency mechanical vibration. The shaft resonance suppression filter suppresses this vibration.	C0	Refer to "Shaft resonance suppression filter" in the following manual. 📖MR-J5 User's Manual (Adjustment)
	Robust filter	This function improves a disturbance response when a response performance cannot be increased because of a large load to motor inertia ratio, such as a roll feed axis.	C0	Refer to "Robust filter" in the following manual. 📖MR-J5 User's Manual (Adjustment)
	Slight vibration suppression control	This function suppresses vibration of ±1 pulse generated at each servo motor stop.	C0	Refer to "SLIGHT VIBRATION SUPPRESSION CONTROL" in the following manual. 📖MR-J5 User's Manual (Adjustment)
Tracking control	Lost motion compensation function	This function reduces the response delay generated when the machine moving direction is reversed.	C0	Refer to "Lost motion compensation function" in the following manual. 📖MR-J5 User's Manual (Adjustment)
	Super trace control	This function reduces the droop pulses at the rated speed and at the uniform acceleration/deceleration to almost zero.	C0	Refer to "Super trace control" in the following manual. 📖MR-J5 User's Manual (Adjustment)
	Path tracking model adaptive control	This function reduces tracking errors in reciprocation.	C0	Refer to "Path tracking model adaptive control" in the following manual. 📖MR-J5 User's Manual (Adjustment)

*1 "Ver." indicates the supported firmware version of the drive unit. The functions are available on drive units with the indicated firmware version or later.

Adjustment function

Functions	Detailed functions	Description	Ver. *1	Detailed explanation
Automatic adjustment	Quick tuning	This function automatically adjusts the gain at servo-on in a short time without acceleration/deceleration operation of the servo motor. Response without overshoot is possible, saving gain adjustment time.	C0	Refer to "Quick tuning" in the following manual. MR-J5 User's Manual (Adjustment)
	Auto tuning	This function automatically adjusts the gain to an optimum value even if the load applied to the servo motor shaft varies.	C0	Refer to "ADJUSTMENT FUNCTION TYPES" in the following manual. MR-J5 User's Manual (Adjustment)
	One-touch tuning	Gain adjustment is performed with this function just by pressing buttons on the drive unit or by clicking a button once on MR Configurator2. One-touch tuning can also be performed via a network.	C0	Refer to "One-touch tuning" in the following manual. MR-J5 User's Manual (Adjustment)
Custom adjustment	Model adaptive control	This function enables control according to the ideal model that is both stable and highly responsive. This is a two-degrees-of-freedom model and can adjust responses to the command and to the disturbance separately. This function can also be disabled.	C0	Refer to "MODEL ADAPTIVE CONTROL" in the following manual. MR-J5 User's Manual (Adjustment)
	Gain switching function	This function switches gains during rotation and during stop, and uses an input device to switch gains during operation. It supports the gain switching by rotation direction and the 3-step gain switching. Therefore, more detailed gain switching is available.	C0	Refer to "GAIN SWITCHING FUNCTION" in the following manual. MR-J5 User's Manual (Adjustment)
Adjustment support	Machine analyzer	This function analyzes the frequency characteristic of the mechanical system by simply connecting the drive unit with an MR Configurator2 installed personal computer.	C0	Refer to "Adjustment functions available in combination with MR Configurator2" in the following manual. MR-J5 User's Manual (Adjustment)

*1 "Ver." indicates the supported firmware version of the drive unit. The functions are available on drive units with the indicated firmware version or later.

I/O, monitor

Functions	Detailed functions	Description	Ver. *1	Detailed explanation
DI/DO	Input signal selection (device selection)	This function assigns input devices such as LSP (Forward rotation stroke end) to certain pins of the connector.	C0	Refer to "Assigning I/O devices" in the following manual. 📖MR-J5 User's Manual (Function)
	Output signal selection (device setting)	This function assigns output devices such as MBR (Electromagnetic brake interlock) to certain pins of the connector.	C0	
	Output signal (DO) forced output	This function forcibly switches the output signals on and off regardless of the servo status. Use this function for purposes such as checking output signal wiring.	C0	☞ Page 74 Output signal (DO) forced output
	A/B/Z-phase output	This function outputs the positions of the encoder and linear encoder in the A/B/Z-phase signal.	C0	Refer to "A/B/Z-phase pulse output function" in the following manual. 📖MR-J5 User's Manual (Function)
LED	Status display	This function shows the servo status on the 7-segment LED display.	C0	☞ Page 39 Switch setting and display of the drive unit
Analog input/output	Analog monitor	This function outputs the servo status in voltage in real time.	C0	Refer to "MONITORING" in the following manual. 📖MR-J5 User's Manual (Function)
Monitor	Power monitoring function	This function calculates the running power and the regenerative power from the data in the drive unit such as speed and current. The power consumption and other values are displayed on MR Configurator2.	C0	
Touch probe	Current position latch function	This function latches the current position when TPR1 (Touch probe 1), TPR2 (Touch probe 2), or TPR3 (Touch probe 3) is turned on.	C0	Refer to "Touch probe" in the following manual. 📖MR-J5 User's Manual (Function)

*1 "Ver." indicates the supported firmware version of the drive unit. The functions are available on drive units with the indicated firmware version or later.

Engineering software

Functions	Detailed functions	Description	Ver. *1	Detailed explanation
Setup software	MR Configurator2	This function performs settings (such as servo parameter settings), test operation, and monitoring with a personal computer.	C0	☞ Page 51 STARTUP

*1 "Ver." indicates the supported firmware version of the drive unit. The functions are available on drive units with the indicated firmware version or later.

Protective functions

Functions	Detailed functions	Description	Ver. *1	Detailed explanation
Alarm	Alarm function	This function displays an alarm or warning when an error occurs during operation. When an alarm occurs, ALM (Malfunction) turns off and stops the servo motor. When a warning occurs, WNG (Warning) will turn on. The servo motor may stop or continue operation depending on the warning.	C0	Refer to "Alarm function" in the following manual. 📖MR-J5 User's Manual (Function)
Power error detection	Disconnection detection function	This function detects a disconnection in the main circuit power supply input and the servo motor power supply output.	C0	For the MR-J5D_-_G_ drive unit, the input open-phase detection function and servo motor incorrect wiring detection function cannot be used. Refer to "Disconnection/incorrect wiring detection function" in the following manual. 📖MR-J5 User's Manual (Function)
Coasting distance reduction	Forced stop deceleration function	This function decelerates the servo motor to a stop at EM2 (Forced stop 2) off or when there is an alarm.	C0	Refer to "Forced stop deceleration function" in the following manual. 📖MR-J5 User's Manual (Function)
Drop protection	Electromagnetic brake interlock function	This function operates the electromagnetic brake at servo off and error occurrence, and prevents the vertical axis from dropping.	C0	Refer to "Electromagnetic brake interlock function" in the following manual. 📖MR-J5 User's Manual (Function)
	Vertical axis freefall prevention function	This function moves the axis up by the mechanical backlash amount of the electromagnetic brake to prevent damage to machines.	C0	Refer to "Vertical axis freefall prevention function" in the following manual. 📖MR-J5 User's Manual (Function)
Braking protection	Dynamic brake	During the power shut-off and alarm occurrence, this function shorts between U, V, and W phases and operates the dynamic brake.	C0	Refer to "Dynamic brake characteristics" in the following manual. 📖MR-J5D User's Manual (Hardware)

*1 "Ver." indicates the supported firmware version of the drive unit. The functions are available on drive units with the indicated firmware version or later.

Functional safety

Available functions and safety levels differ depending on the combination of the drive units and the servo motors and firmware version of the drive units.

☞ Page 18 List of safety sub-function compatible units

Functions	Detailed functions	Description	Ver. *1	Detailed explanation
Safety sub-function	STO (Safe torque off) (When functional safety parameters are not used)	This drive unit supports the STO function for functional safety as per IEC/EN 61800-5-2. This allows a safety system to be easily configured for the equipment.	C0	Refer to "USING STO FUNCTION" in the following manual. 📖MR-J5D User's Manual (Hardware)
	STO (Safe torque off) (When functional safety parameters are used)	This function electrically shuts off the servo motor driving energy with input signals from external devices (shut-off by the secondary-side output). This is equivalent to the stop category 0 of IEC/EN 60204-1.	C0	Refer to "FUNCTIONAL SAFETY" in the following manual. 📖MR-J5 User's Manual (Function)
	SS1 (Safe stop 1)	This function starts deceleration with input signals from external devices. After the specified time to confirm the motor stop, the STO function is executed (SS1). This is equivalent to the stop category 1 of IEC/EN 60204-1.	C0	
	SS2 (Safe stop 2)	This function starts deceleration with input signals from external devices. After the specified time to confirm the motor stop, the SOS function is executed (SS2). This is equivalent to the stop category 2 of IEC/EN 60204-1.	D8	
	SOS (Safe operating stop)	This function monitors whether the servo motor stops within the prescribed range. Energy is supplied to the servo motor.	D8	
	SLS (Safely-limited speed)	This function monitors whether the speed is within the prescribed speed limit. If the speed exceeds the specified speed limit, the STO will shut off energy.	D8	
	SSM (Safe speed monitor)	This function outputs signals when the servo motor speed is below the prescribed speed.	D8	
	SBC (Safe brake control)	This function outputs signals for controlling the external brake.	C0	
	SDI (Safe direction)	This function monitors whether the servo motor travels in the specified direction. If the servo motor travels in a direction different from the specified direction, the STO will shut off energy.	D8	
	SLI (Safely-limited increment)	This function monitors whether the travel distance of the servo motor is within the specified range. If the travel distance of the servo motor exceeds the specified range, the STO will shut off energy.	D8	
	SLT (Safely-limited torque)	This function monitors whether the torque is below the specified torque. If the torque exceeds the specified torque, the STO will shut off energy.	D8	

*1 "Ver." indicates the supported firmware version of the drive unit. The functions are available on drive units with the indicated firmware version or later.

Instantaneous power failure measures

Functions	Detailed functions	Description	Ver. *1	Detailed explanation
Tough drive	SEMI-F47 function	This function uses the electrical energy charged in the capacitor to avoid triggering [AL. 010 Undervoltage] in case that an instantaneous power failure occurs during operation. Use a 3-phase power supply for the input power supply of the servo amplifier. Using a 1-phase 200 V AC for the input power supply will not comply with SEMI-F47 standard.	—	For the MR-J5D_-_G_ drive unit, this function cannot be used.
	Tough drive function	This function makes the equipment continue operating even under conditions where an alarm would normally occur. There are two types of tough drive function: the vibration tough drive and the instantaneous power failure tough drive.	C0	For the MR-J5D_-_G_ drive unit, instantaneous power failure tough drive cannot be used. Refer to "Tough drive function" in the following manual. 📖MR-J5 User's Manual (Function)

*1 "Ver." indicates the supported firmware version of the drive unit. The functions are available on drive units with the indicated firmware version or later.

Diagnostics

Functions	Detailed functions	Description	Ver. *1	Detailed explanation
Drive data diagnosis	Drive recorder	This function continuously monitors the servo status and records the state transition before and after an alarm for a fixed period of time. The recorded data can be checked by the Waveform-Display button on the drive recorder window of MR Configurator2 being clicked.	C0	Refer to "Drive recorder" in the following manual. 📖MR-J5 User's Manual (Function)
	Graph function	This function obtains the servo status in the graph.	C0	Refer to "Graph function" in the following manual. 📖MR-J5 User's Manual (Function)
Failure diagnosis	Encoder communication diagnosis function	This function diagnoses with MR Configurator2 whether the encoder communication error is caused by the circuit malfunction of the drive unit or by the malfunction of the cables/encoder.	C0	Refer to "Encoder communication diagnosis function" in the following manual. 📖MR-J5 User's Manual (Function)
Service life diagnosis	Servo amplifier life diagnosis function	This function enables checking of the cumulative energization time and the number of inrush relay on/off times. It gives an indication of the replacement time for parts on the drive unit with a service life (such as the capacitor and the relay) before they malfunction. MR Configurator2 is required for this function.	C0	Refer to "Servo amplifier life diagnosis function" in the following manual. 📖MR-J5 User's Manual (Function)
	Motor life diagnosis function	This function predicts failures of the equipment and the servo motor based on the machine total travel distance. It gives an indication of the replacement time for the servo motor.	C0	Refer to "Machine diagnosis" in the following manual. 📖MR-J5 User's Manual (Function)
	Machine diagnosis function	This function uses the data in the drive unit to estimate the friction and vibrational component of the drive system in the equipment and to recognize an error in machine parts such as ball screws and bearings.	C0	
		This function automatically sets the threshold used for detecting the error of machine parts such as ball screws and bearings. It outputs the warning when the friction, vibrational component, and total revolution of the servo motor are out of the set threshold. The error in the machine parts such as ball screws and bearings can be detected automatically.	C0	
		This function estimates the friction of gears and loosening of belts (decrease in the belt tension), and detects errors in the gears and belts.	C0	
System diagnosis	System configuration information	This function uses MR Configurator2 to monitor the drive unit model, connected servo motor, encoder, and other information.	C0	Refer to "System configuration display" in the following manual. 📖MR-J5 User's Manual (Function)

*1 "Ver." indicates the supported firmware version of the drive unit. The functions are available on drive units with the indicated firmware version or later.

History

Functions	Detailed functions	Description	Ver. *1	Detailed explanation
—	Alarm history	This function saves information of the alarm that occurred in the drive unit. The information is saved in chronological order and used for occasions such as analyzing the cause of the alarm.	C0	Refer to "Alarm history" in the following manual. 📖MR-J5 User's Manual (Function)

*1 "Ver." indicates the supported firmware version of the drive unit. The functions are available on drive units with the indicated firmware version or later.

2.3 Security

To completely prevent unauthorized access to the system from external devices, the user also must take safety measures. Mitsubishi Electric Corporation cannot be held responsible for any problems caused by unauthorized access.

3 STRUCTURE

The flame retardancy of the resin material used for the cabinet of the drive unit (excluding the display cover) and printing board is UL94 V-0.

3.1 Parts identification

MR-J5D_-_G_-N1

- MR-J5D1-_G_-N1

The diagram shows MR-J5D1-100G4-N1.

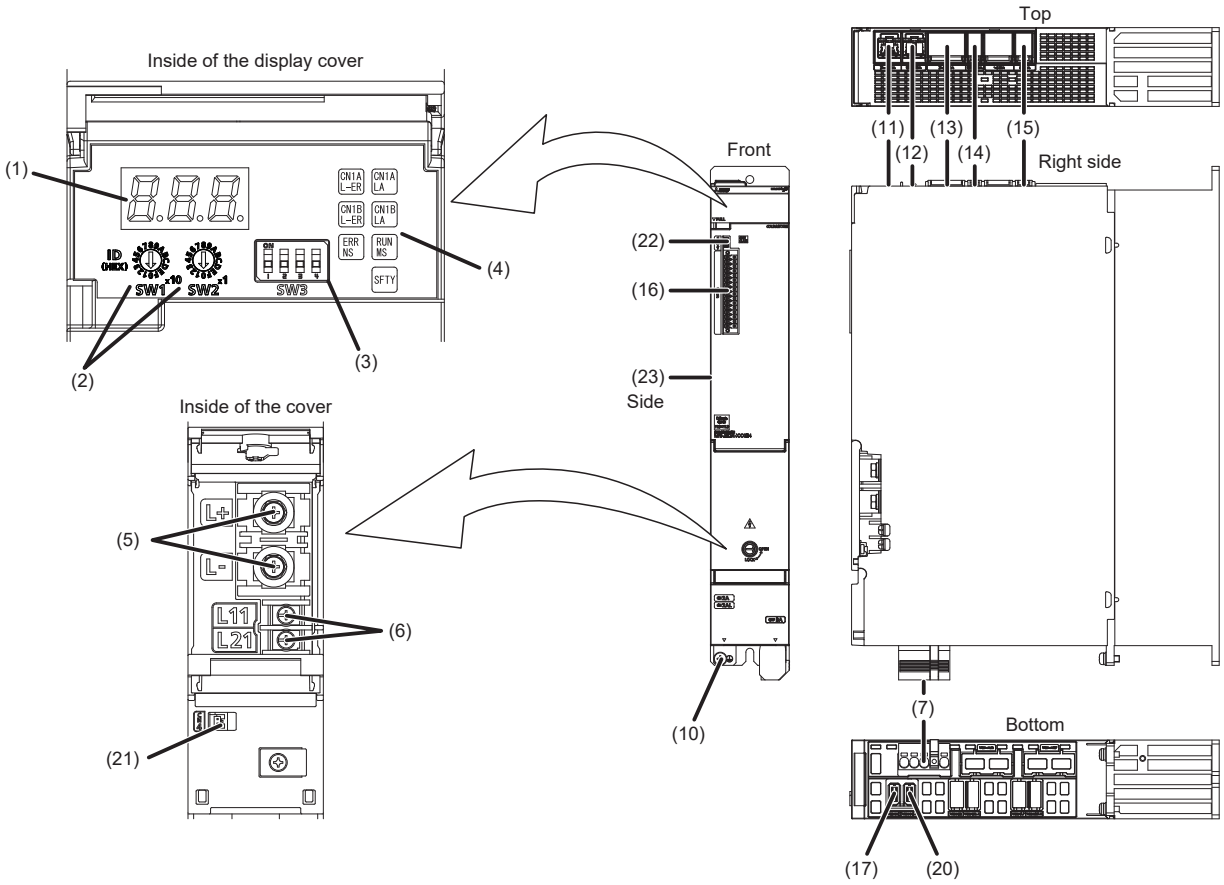

• MR-J5D2-_G_-N1/MR-J5D3-_G_-N1

The diagram shows MR-J5D3-100G4-N1.

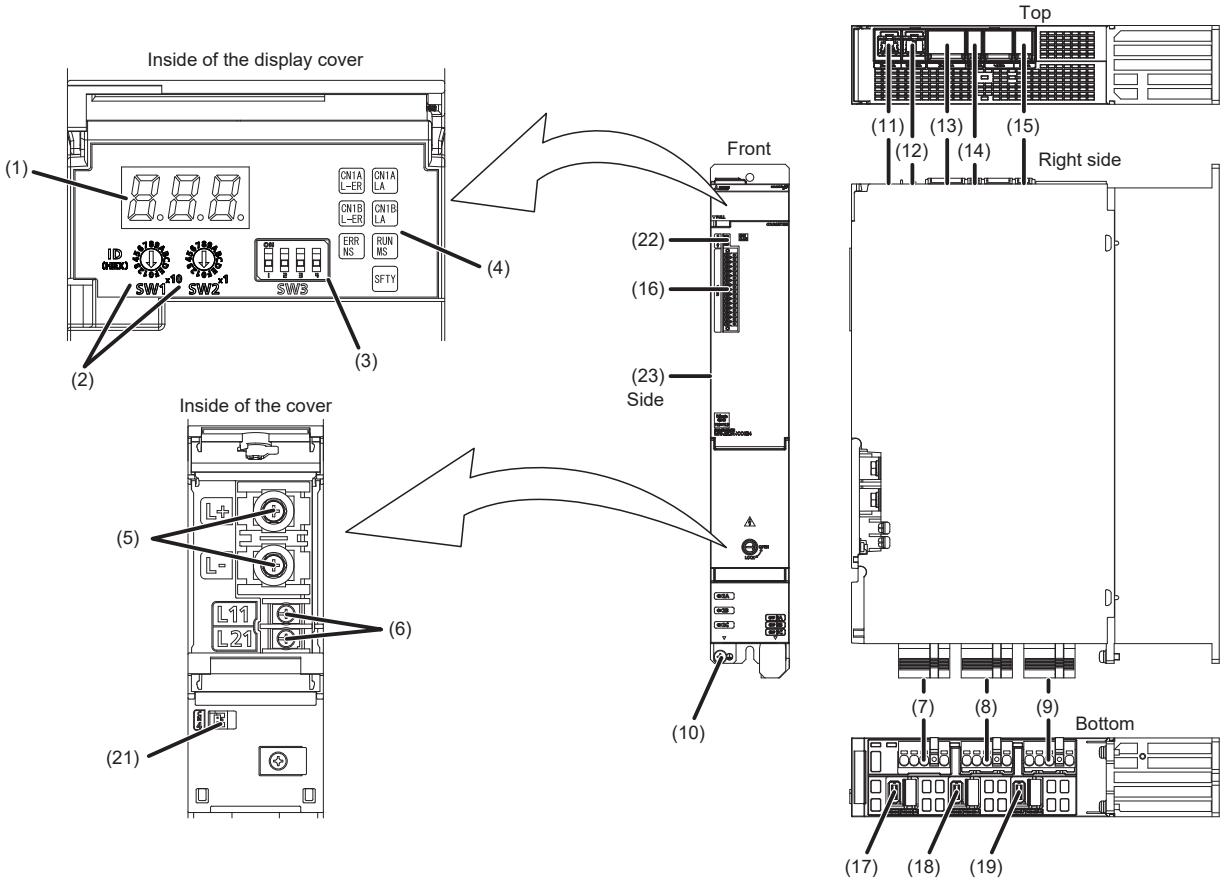

No.	Name	Application	Detailed explanation
(1)	Display section	The 3-digit, 7-segment LED display shows the servo status and alarm number.	☞ Page 39 Switch setting and display of the drive unit
(2)	ID setting switches (SW1/SW2)	Set the node address of the drive unit.	
(3)	DIP switch (SW3)	Consists of the test operation switch and control axis deactivation switch.	
(4)	Network status LEDs	Displays each network status.	
(5)	L+/L- terminal (TE2)	Connect with the L+ and L- terminals of the converter unit or another drive unit by bus bars. (DC input)	Refer to "Explanation of power supply system" in the following manual. 📖MR-J5D User's Manual (Hardware)
(6)	Control circuit terminal (TE3)	Connect the control circuit power supply.	
(7)	A-axis servo motor power connector (CNP3A)	Connect the A-axis servo motor.	
(8) *1	B-axis servo motor power connector (CNP3B)	Connect the B-axis servo motor.	
(9) *2	C-axis servo motor power connector (CNP3C)	Connect the C-axis servo motor.	
(10)	Protective earth (PE) terminal	Connect this terminal to the protective earth (PE) of the cabinet.	
(11)	Ethernet cable connector (CN1A)	Connect the controller, drive unit, servo amplifier or each network connected device.	Refer to "Connecting Ethernet cables" in the following manual. 📖MR-J5-G-N1/MR-J5W-G-N1 User's Manual (Communication Function)
(12)	Ethernet cable connector (CN1B)		
(13)	Protection coordination connector (CN40A)	Connect it with a nearby converter unit or drive unit.	Refer to "Example power circuit connections" in the following manual. 📖MR-J5D User's Manual (Hardware)
(14)	Protection coordination connector (CN40B)	Connect it with a nearby drive unit.	

No.	Name	Application	Detailed explanation
(15)	Functional safety I/O signal connector (CN8)	Connect an external safety relay to use the STO function. When using other safety-sub functions, refer to "FUNCTIONAL SAFETY" in the following manual. 📖MR-J5 User's Manual (Function)	Refer to "USING STO FUNCTION" and "USING FUNCTIONAL SAFETY" in the following manual. 📖MR-J5D User's Manual (Hardware)
(16)	I/O signal connector (CN3)	Connect the digital I/O signals. The analog monitor is output from this connector.	Refer to "Connectors and pin assignments" in the following manual. 📖MR-J5D User's Manual (Hardware)
(17)	A-axis encoder connector (CN2A)	Connect the A-axis servo motor encoder or external encoder.	☞ Page 38 External encoder connector
(18) *1	B-axis encoder connector (CN2B)	Connect the B-axis servo motor encoder or external encoder.	
(19) *2	C-axis encoder connector (CN2C)	Connect the C-axis servo motor encoder or external encoder.	
(20) *3	External encoder connector (CN2AL)	Connect the external encoder.	
(21)	Battery connector (CN4)	This is a connector to connect the battery for absolute position data backup. When the servo motor with a batteryless absolute position encoder is being used, it does not need to be connected to the battery for absolute position data backup.	—
(22)	USB communication connector (CN5)	Connect with a personal computer.	—
(23)	Rating plate	Indicates model, capacity, and other information.	☞ Page 8 Rating plate

*1 For the 2-axis drive unit and 3-axis drive unit.
*2 For the 3-axis drive unit.
*3 For the 1-axis drive unit.

■External encoder connector

The following table shows the communication method of the external encoder compatible with the drive units.

System configuration	External encoder communication method	Connector		
		MR-J5D1-_G_-N1	MR-J5D2-_G_-N1	MR-J5D3-_G_-N1
Fully closed loop system	Two-wire type	CN2AL	CN2A *1 *2 CN2B *1 *2	—
	Four-wire type		—	
	A/B/Z-phase differential input			
Scale measurement function	Two-wire type	CN2AL	CN2A *1 *2 CN2B *1 *2	—
	Four-wire type		—	
	A/B/Z-phase differential input			

*1 The MR-J4FCCBL03M branch cable is required.
*2 If the external encoder communication method is the four-wire type, the MR-J5D2-_G_ cannot be used. Use MR-J5D1-_G_.

3.2 Switch setting and display of the drive unit

Switching to the test operation mode and configuring network setting can be done with switches on the drive unit. The network communication status and alarm status can also be checked on the display (3-digit, 7-segment LED) of the drive unit.

Switches

If a metal screw driver contacts with the conductive areas, the switches may malfunction. Therefore, use an insulated screw driver instead of the metal screw driver to operate ID setting switches (SW1/SW2) and DIP switches (SW3).
If all the DIP switches (SW3) are turned "ON (up)", the drive unit is switched to the operation mode for manufacturer setting and "off" will be displayed. The drive unit cannot be used in this mode. Thus, set the DIP switches (SW3) correctly according to this section.
To apply the settings of all switches, cycle the control circuit power supply or perform a software reset.
The following explains the ID setting switches (SW1/SW2) and DIP switches (SW3).

Switch identification

■1-axis drive unit

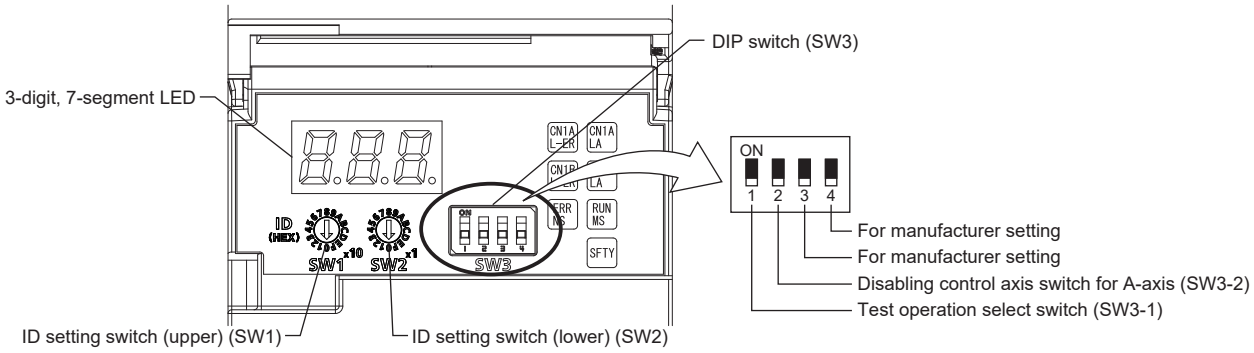

■2-axis drive unit

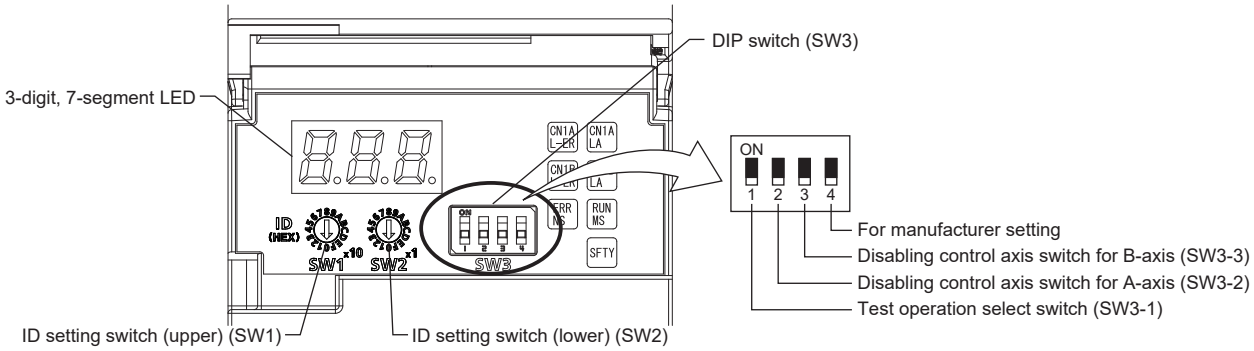

■3-axis drive unit

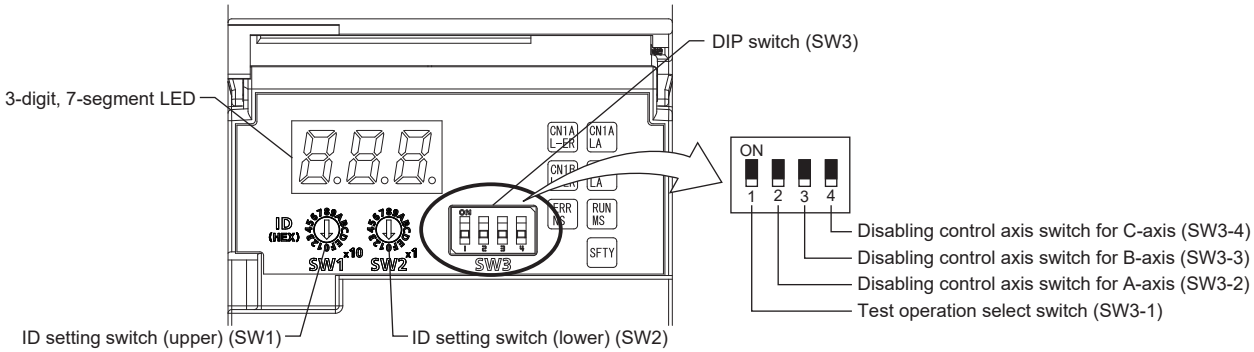

Test operation select switch (SW3-1)

Turning "ON (up)" the test operation select switch enables the test operation mode. In the test operation mode, functions such as JOG operation, positioning operation, and machine analyzer are available using MR Configurator2.

☞ Page 67 Test operation

Disabling control axis switches (SW3-2, SW3-3, and SW3-4)

Turning "ON (up)" the disabling control axis switch disables the corresponding servo motor. The servo motor will become in the disabled-axis state and will not be recognized by the controller.

ID setting switches (SW1/SW2)

The node address can be set with the ID setting switches (SW1/SW2) of the drive unit. SW1 indicates an upper digit and SW2 indicates a lower digit of a hexadecimal. The ID setting switches are set to 01h when shipped from the factory.

For how to set node addresses, refer to "Node address setting" in the following manual.

📖MR-J5-G-N1/MR-J5W-G-N1 User's Manual (Communication Function)

7-segment LED

The network connection status, servo status, and alarm/warning occurrence statuses can be checked on the 7 segment LED display.

Display sequence

The following shows the display sequence of the 7-segment LED display after power-on. Once a system check is complete and the drive unit is started, the network connection status will be displayed.

■For EtherCAT

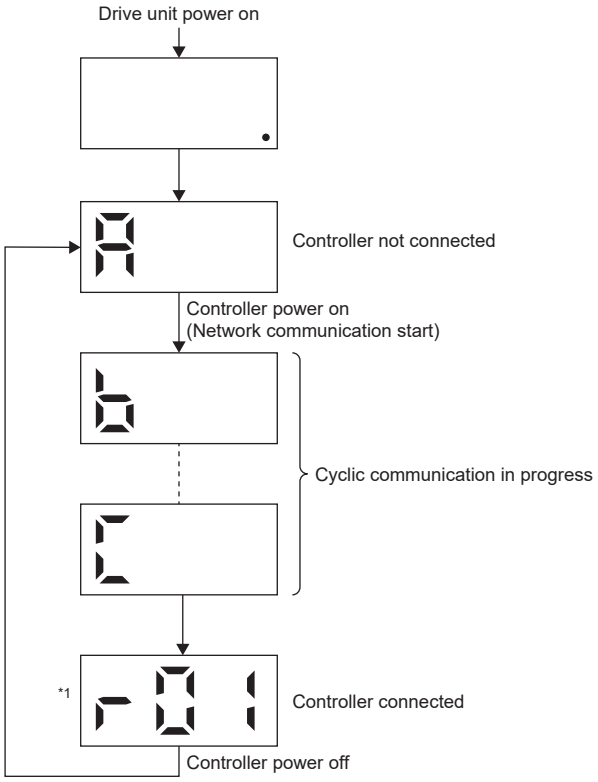

*1 The segment of the last 2 digits shows the node address.

☞ Page 43 When the network is connected

■For EtherNet/IP

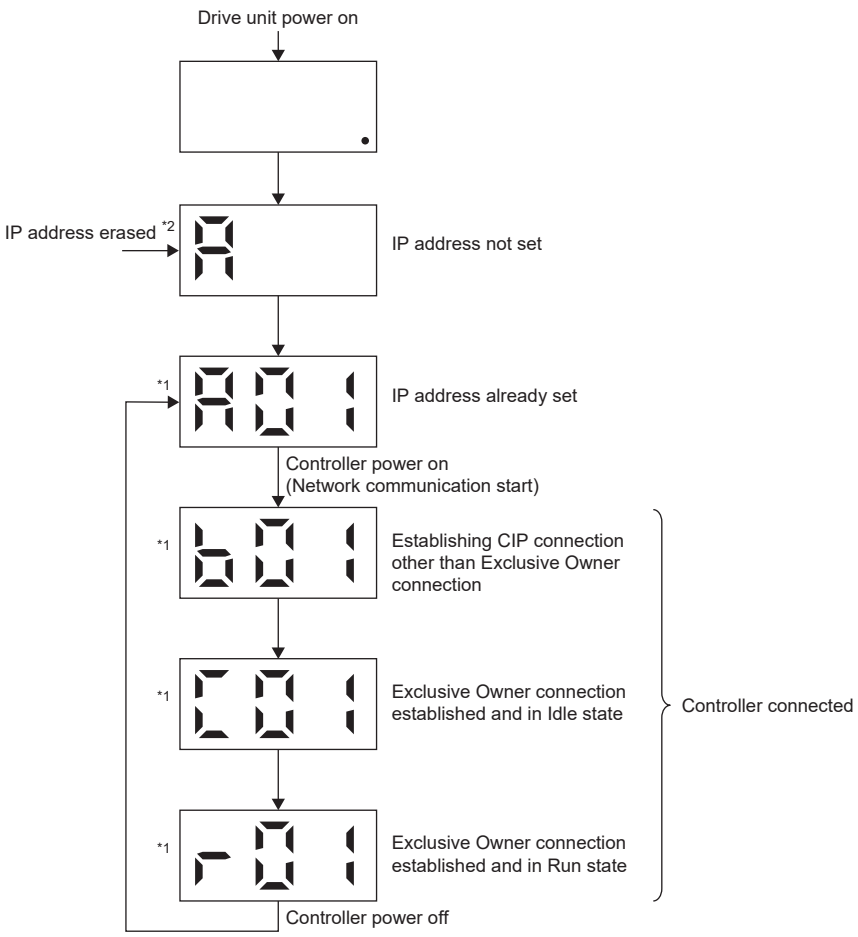

*1 The segment of the last 2 digits shows the IP address.

*2 The IP address is erased under the following conditions.

- The DHCP function is enabled with the DHCP function enabled and the IP address set.
- The drive unit is disconnected from the network it belongs to while the ACD function is enabled.
- Duplication of IP addresses on the same network is detected while the ACD function is enabled.

■For PROFINET

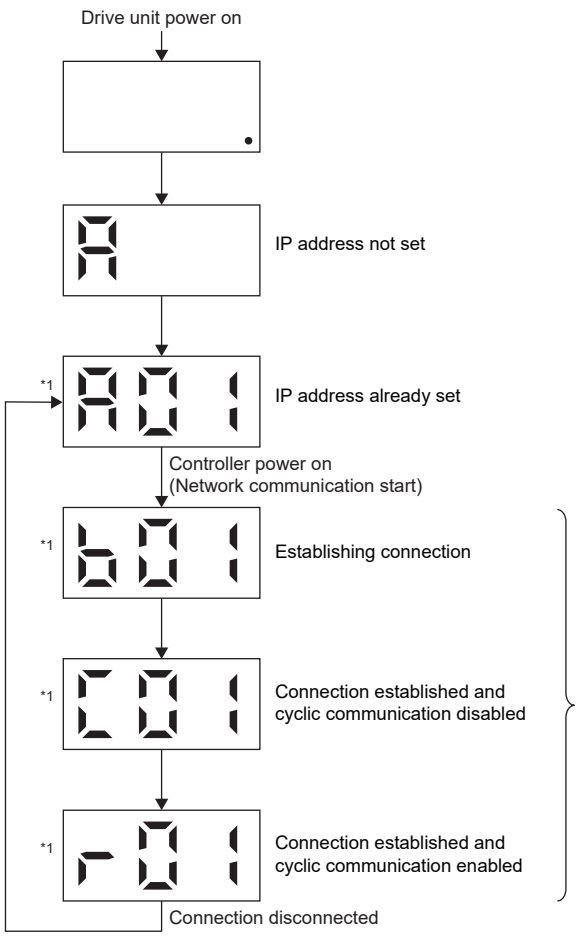

*1 The segment of the last 2 digits shows the IP address.

Alarm display

When an alarm/warning occurs, the alarm status is displayed after the network connection status. This is an example of the alarm display for when [AL. 032.2 Overcurrent] is occurring.

■1-axis drive unit

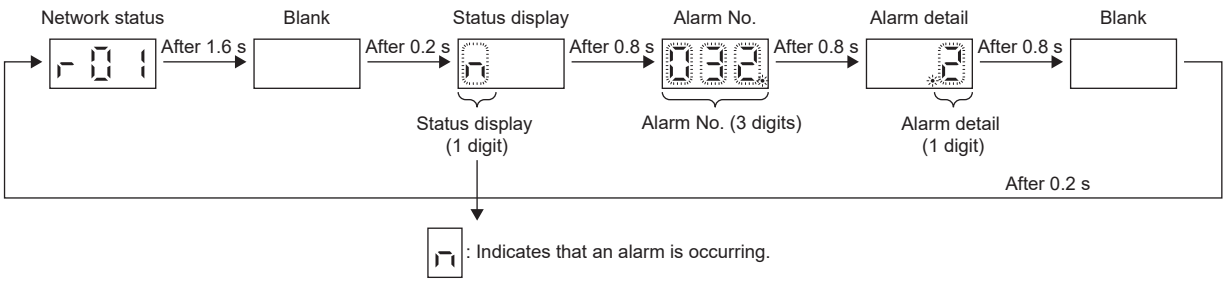

■For multi-axis drive units

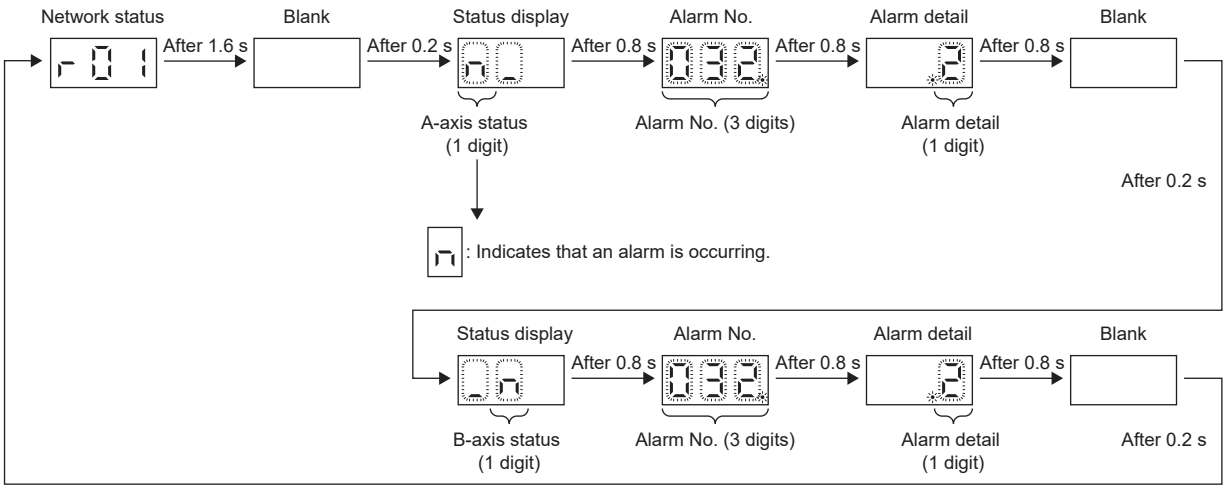

When a 3-axis drive unit is used, the alarm occurrence status in the B-axis is indicated before the alarm occurrence in the C-axis.

When the network is connected

The network connection status is displayed as follows. The servo status is expressed in decimal points.

1-axis drive unit	2-axis drive unit	3-axis drive unit
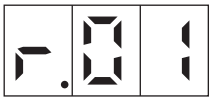	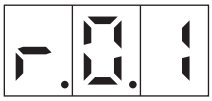	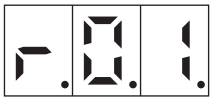
Servo status Off: Indicates ready-off and servo-off status. Blinking: Indicates ready-on and servo-off status. On: Indicates ready-on and servo-on status.	B-axis servo status A-axis servo status Off: Indicates ready-off and servo-off status. Blinking: Indicates ready-on and servo-off status. On: Indicates ready-on and servo-on status.	C-axis servo status B-axis servo status A-axis servo status Off: Indicates ready-off and servo-off status. Blinking: Indicates ready-on and servo-off status. On: Indicates ready-on and servo-on status.

The last 2 digits indicate a network address corresponding to each network.

Network	Address
EtherCAT	A node address is displayed in hexadecimal.
EtherNet/IP	The 4th octet of the IP address is displayed in hexadecimal.
PROFINET	

When the network is not connected

The network connection status is displayed for each axis.

1-axis drive unit	2-axis drive unit	3-axis drive unit
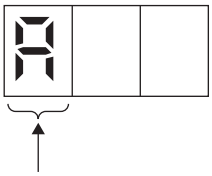	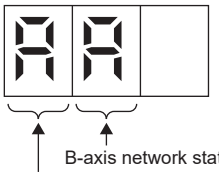	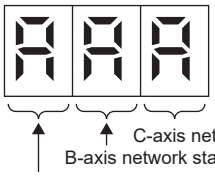

■For EtherCAT

The 7-segment LED display during initialization is as follows.

Display	Description
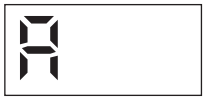	Indicates that the drive unit is not connected to the controller.
	Indicates the Pre-Operational state shown in the state transition diagram of the ESM state machine.
	Indicates the Safe-Operational state shown in the state transition diagram of the ESM state machine.
	Indicates the BootStrap state shown in the state transition diagram of the ESM state machine.

■For EtherNet/IP

The 7-segment LED display during communication is as follows.

Display	Description
	Indicates that the IP address is not set or determined. The IP address is not set or determined under the following conditions. • The IP address is not set from the DHCP server while the DHCP function is enabled. • The servo amplifier is disconnected from the network with the ACD function enabled. • Duplication of IP addresses on the same network is detected while the ACD function is enabled.
	Indicates that the CIP connection is not established even though the IP address is already set.
	Indicates that the CIP connection other than the Exclusive Owner connection is established.
	Indicates that the Exclusive Owner connection is being established and its communication status is in the Idle state.
	Indicates that the Exclusive Owner connection is being established and its communication status is in the Run state.

■For PROFINET

The 7-segment LED display during communication is as follows.

Display	Description
A	Indicates that the IP address is not set (0.0.0.0).
A01	Indicates that the connection to the controller is not established even though the IP address is already set. Waiting to receive Connect.req.
b01	Indicates that the connection to the controller is being established.
C01	Indicates that the connection to the controller is already established and process data to be communicated via cyclic communication is disabled. *1
r01	Indicates that the connection to the controller is already established and process data to be communicated via cyclic communication is enabled. For multi-axis amplifiers, indicates that process data for one or more valid axes is active.

*1 When process data is inactive, all operations (commands), including servo motor driving, are disabled.

Other status displays

Display	Status	Description
rSr	Test operation mode	Indicates that the test operation mode is set.
888	CPU error	Indicates that a CPU watchdog error has occurred.
UPd	—	This is for manufacturer setting.
dEF	Initialization in progress	Indicates that initialization of settings such as parameters is in progress.
SEr	IP address setting in progress	Indicates that the IP address is being set via a network.
ECr	EtherCAT	Indicates that the network protocol setting is "EtherCAT" in the network setting mode.
E.P	EtherNet/IP	Indicates that the network protocol setting is "EtherNet/IP" in the network setting mode.
PnF	PROFINET	Indicates that the network protocol setting is "PROFINET" in the network setting mode.

Status LEDs

The LED states (RUN MS/ERR NS) indicate the network status of the drive unit.

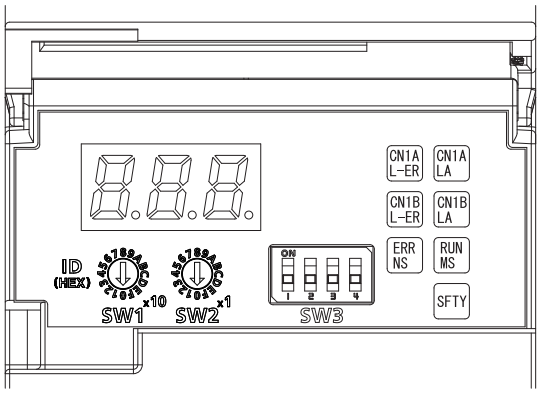

LED	Description
CN1AL-ER/CN1BL-ER (red)	Name: Line error status On: Indicates that erroneous data is being received.
CN1ALA/CN1BLA (green)	Name: Link/Activity ☞ Page 48 LED display (for EtherCAT) ☞ Page 49 LED display (for EtherNet/IP)
RUNMS (green)	☞ Page 48 LED display (for EtherCAT) ☞ Page 49 LED display (for EtherNet/IP)
ERRNS (red)	
SFTY (green)	Off: Indicates that the functional safety cannot be activated. On: Indicates that the functional safety can be activated.

LED display (for EtherCAT)

RUN MS (RUN LED), ERR NS (ERROR LED), and Link/Activity operate in compliance with the EtherCAT standard (ETG.1300 EtherCAT Indicator and Labeling Specification).

LED status definitions

The following shows the LED status definitions.

LED status	Definition
On	The LED is lit steadily.
Off	The LED is unlit steadily.
Flickering	The LED turns on and off repeatedly in a 10 Hz cycle (every 50 ms).
Blinking	The LED turns on and off repeatedly in a 2.5 Hz cycle (every 200 ms).
Single flash	The LED turns on for 200 ms and off for 1000 ms repeatedly.
Double flash	The LED repeats the cycle of turning on for 200 ms -> off for 200 ms -> on for 200 ms -> off for 1000 ms.

Explanations of LED statuses

■RUN MS (RUN LED)

The RUN LED indicates the EtherCAT communication status (ESM status).

LED		Description
Status	Color	
Off	—	Indicates the power supply being shut off or the Init state.
Blinking	Green	Indicates the Pre-Operational state.
Single flash		Indicates the Safe-Operational state.
On		Indicates the Operational state.

■ERR NS (ERROR LED)

The ERROR LED indicates an error occurrence in EtherCAT communication.

LED		Description
Status	Color	
Off	—	No errors
Blinking	Red	Indicates that the EtherCAT state cannot be changed as instructed from the master station.
Single flash		Indicates that the EtherCAT state has been changed autonomously because of an internal error.
Double flash		Indicates a watchdog error in the Sync manager.
On		Indicates critical errors such as a watchdog timeout.

■Link/Activity LED (OUT port/IN port)

The Link/Activity LEDs indicate the link status of each EtherCAT communication port.

LED		Description
Status	Color	
Off	—	Indicates that the power supply is shut off or the link is not established.
On	Green	Indicates that the link is established but no traffic.
Flickering		Indicates that the link is established with traffic.

LED display (for EtherNet/IP)

Network Status and Module Status operate in compliance with the EtherNet/IP standard (THE CIP NETWORKS LIBRARY Volume 2: EtherNet/IP Adaptation of CIP).

LED status definitions

The following shows the LED status definitions.

LED status	Definition
On	The LED is lit steadily.
Off	The LED is unlit steadily.
Blinking	The LED turns on and off repeatedly in a 1 Hz cycle (every 500 ms).
Flickering	The blinking cycle is not steady. The blinking cycle fluctuates depending on the packet amount of Ethernet.

Explanations of LED statuses

■RUN MS (Module Status LED)

The Module Status LED indicates the status of the drive unit.

LED		Description
Status	Color	
Off	—	Indicates that no voltage is supplied.
On	Green	Indicates that the servo motor driving is available.
Blinking		Indicates that the servo motor driving is not available.
Blinking	Red	Indicates that a recoverable error (Major Recoverable Fault) is occurring.
On		Indicates that an unrecoverable error (Major Unrecoverable Fault) is occurring.
Blinking alternately	Green/Red	Indicates that the self-diagnosis at power-on is in progress.

■ERR NS (Network Status LED)

The Network Status LED indicates the EtherNet/IP communication status and an error occurrence in EtherNet/IP communication.

LED		Description
Status	Color	
Off	—	Indicates that no voltage is supplied or the IP address is not set.
Blinking	Green	Indicates that the connection is not established even though the IP address is already set.
On		Indicates that the connection is established and operating normally.
Blinking	Red	Indicates that a time-out has occurred in the Exclusive Owner connection.
On		Indicates that duplication of IP addresses has been detected.
Blinking alternately	Green/Red	Indicates that the self-diagnosis at power-on is in progress.

■Link/Activity LED

The Link/Activity LEDs indicate the link status of each EtherNet/IP communication port.

LED		Description
Status	Color	
Off	—	Indicates that the power supply is shut off or the link is not established.
On	Green	Indicates that the link is established but no traffic.
Flickering		Indicates that the link is established with traffic.

LED display (for PROFINET)

LED status definitions

The following shows the LED status definitions.

LED status	Definition
On	The LED is lit steadily.
Off	The LED is unlit steadily.
Flickering	The blinking cycle is not steady. The blinking cycle fluctuates depending on the packet amount of Ethernet.
Blinking	The LED turns on and off repeatedly in a 500 ms cycle for three seconds.
Single flash	The LED turns on for 200 ms and off for 1000 ms repeatedly.
Double flash	The LED repeats the cycle of turning on for 200 ms, off for 200 ms, on for 200 ms, and off for 1000 ms.

Explanations of LED statuses

■Network Status LED (NS LED)

The Network Status LED indicates the PROFINET communication status.

LED		Description
Status	Color	
Off	—	Indicates that the power supply is shut off, the test operation is being performed, or the connection to the controller is not established.
On	Green	Indicates that the connection to the controller is already established and cyclic communication is enabled for all the valid axes.
Single flash		Indicates that the connection to the controller is already established and cyclic communication is disabled for one or more valid axes.
On	Red	Indicates that a communication error has been detected.
Single flash		Indicates that the station name is not set.
Double flash		Indicates that the identification information of the controller differs from the identification information of the device, which means a configuration error.

■Module Status LED (MS LED)

The Module Status LED indicates the status of the device and an error occurrence in PROFINET communication.

LED		Description
Status	Color	
Off	—	Indicates that the power supply is shut off, the test operation is being performed, or the initialization has not been completed.
On	Green	Indicates that the initialization is completed and the operation is being performed normally.
Blinking		Indicates that the LED test of DCP is being conducted.
On	Red	Indicates that an alarm is occurring.

■Link/Activity LED

The Link/Activity LEDs indicate the link status of each PROFINET communication port.

LED		Description
Status	Color	
Off	—	Indicates that the power supply is shut off or the link is not established.
On	Green	Indicates that the link is established but no traffic.
Flickering		Indicates that the link is established with traffic.

4 STARTUP

Point

- MR-J5D_-_G_-N1 drive units can only be set with MR Configurator2 version 1.125F or later.
- Before starting operation, check each servo parameter. Depending on the machine, an unexpected operation may occur.
- [Pr. PN13.0-3 Network protocol setting] is set to "0100h" (EtherCAT) at the factory setting. When using Ethernet/IP, change [Pr. PN13.0-3] to "0800h" (EtherNet/IP).
- The setting value of [Pr.PN13.0-3] can be automatically changed by setting the drive unit to the network switching mode to detect EtherNet/IP communication automatically. Refer to the following for details.

☞ Page 59 Network protocol switching methods

When using a linear servo motor, the terms below have the following meanings.

- Load to motor inertia ratio → Load to motor mass ratio
- Torque → Thrust

Servo parameter setting method

Point

- Servo parameters may be changed by the controller via a network. In this case, take measures such as not turning on the controller or not connecting the network cable to the controller, so that the servo parameter setting does not change.

MR Configurator2 is the software used for purposes such as servo parameter settings, graph measurement/display, and test operation. This chapter describes the startup procedure of the drive unit when the drive unit is connected to a personal computer which has MR Configurator2 installed. To learn more about using MR Configurator2, refer to Help in MR Configurator2.

■For USB communication

Point

- The USB communication may be disconnected by operations such as servo parameter settings and drive recorder readout, depending on the load on the drive unit. If this is the case, remove the USB cable, then connect it again.

1. Connect the drive unit and the personal computer with a USB cable. Turn on the drive unit control circuit power supply.

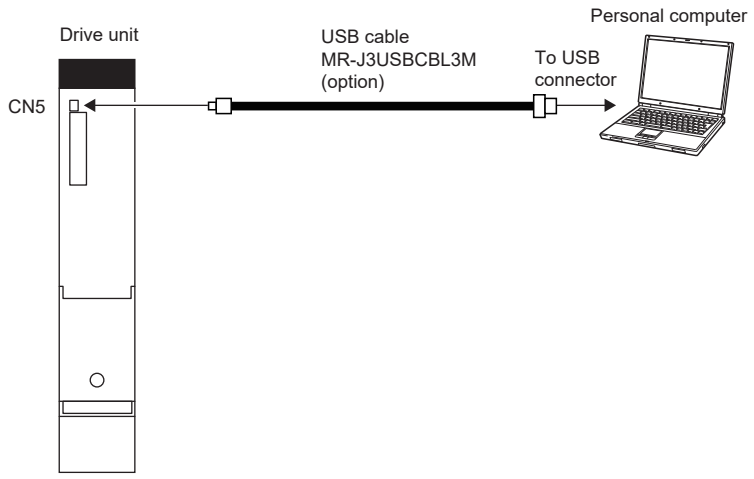

2. Start MR Configurator2 and create a new project. For the connection setting, select USB. Select the drive unit model.

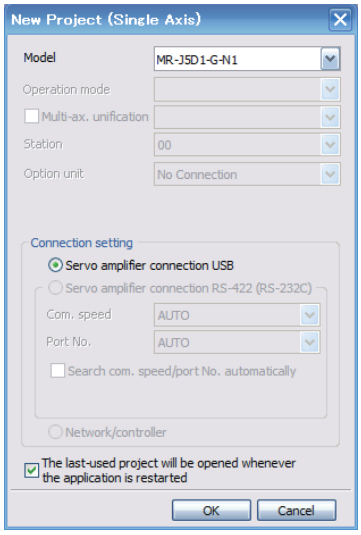

For a multi-axis drive unit, select an axis to be connected.

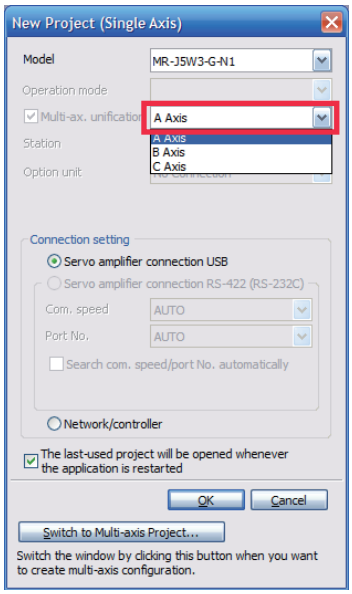

3. Selecting "Parameter" from the project tree opens the "Parameter Setting" screen.

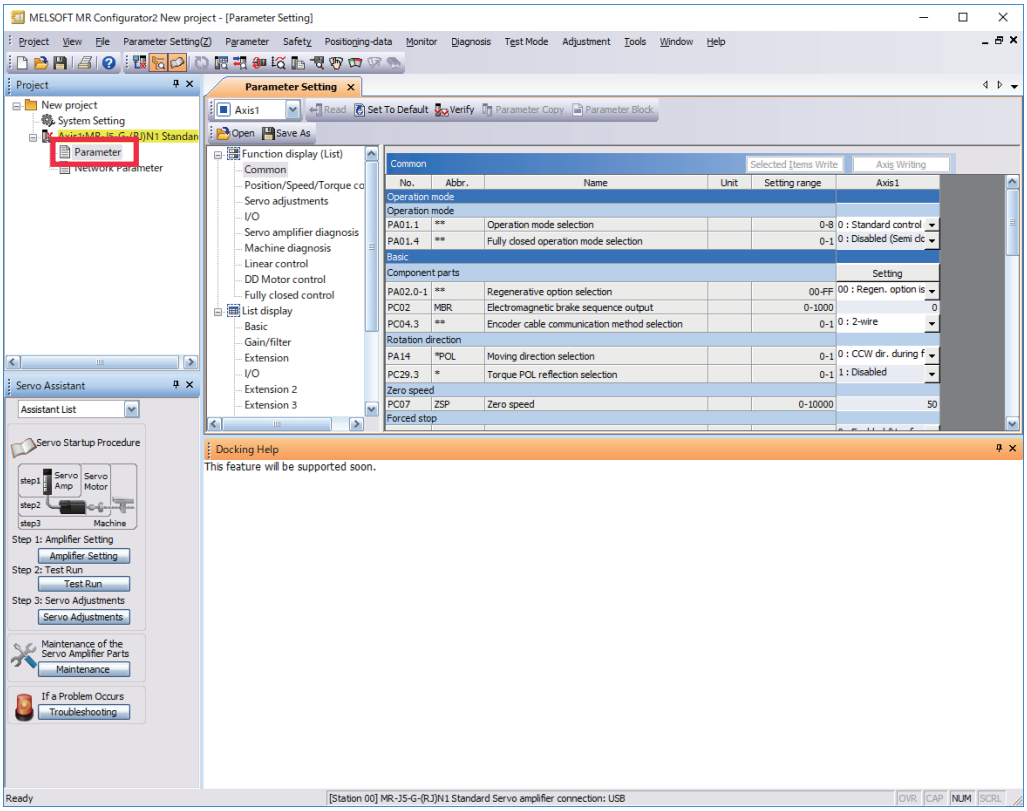

4. Select a group of servo parameters in the selection tree of the "Parameter Setting" window to display and configure the settings.

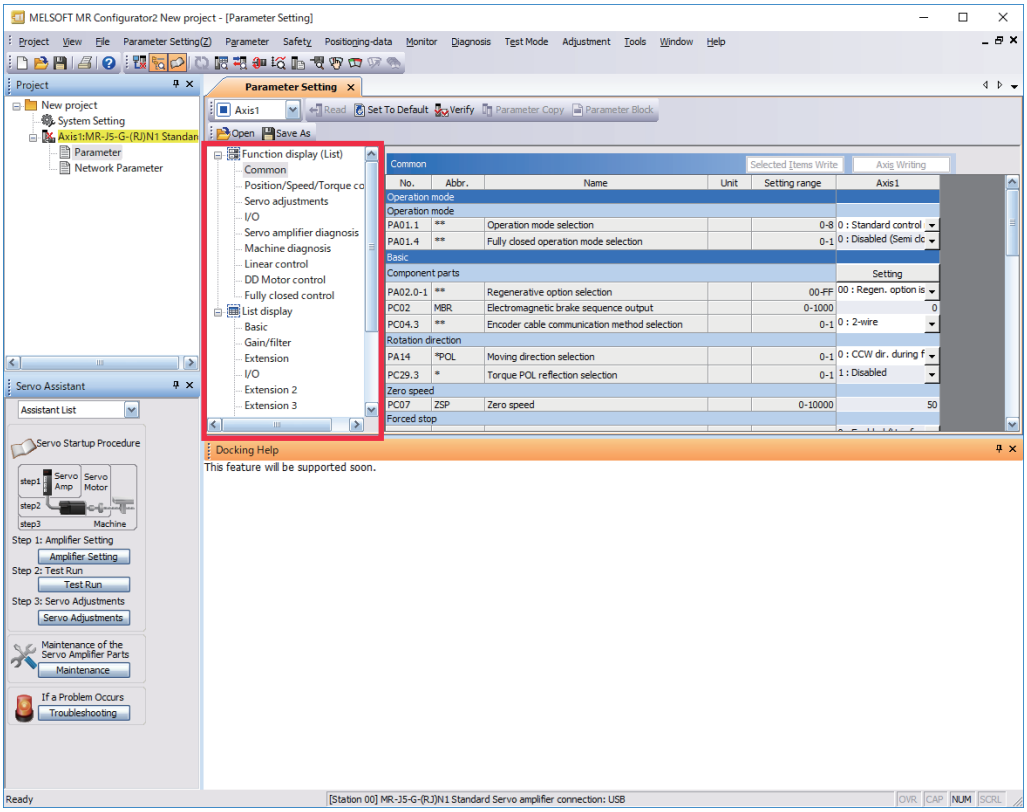

5. After changing the servo parameter, click "Selected Items Write" or "Axis Writing".

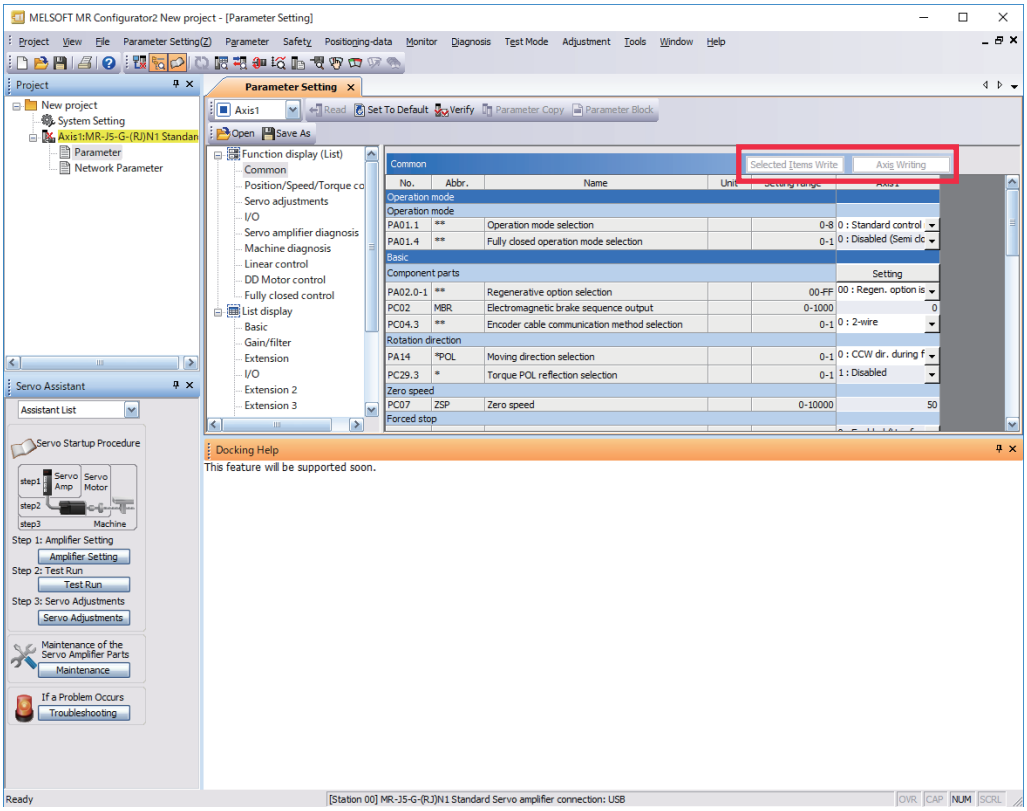

6. Abbreviated servo parameters prefixed with * and servo parameters marked with ** are enabled after the power is cycled or a software reset is performed. Click "Software Reset" in MR Configurator2 to perform the software reset.

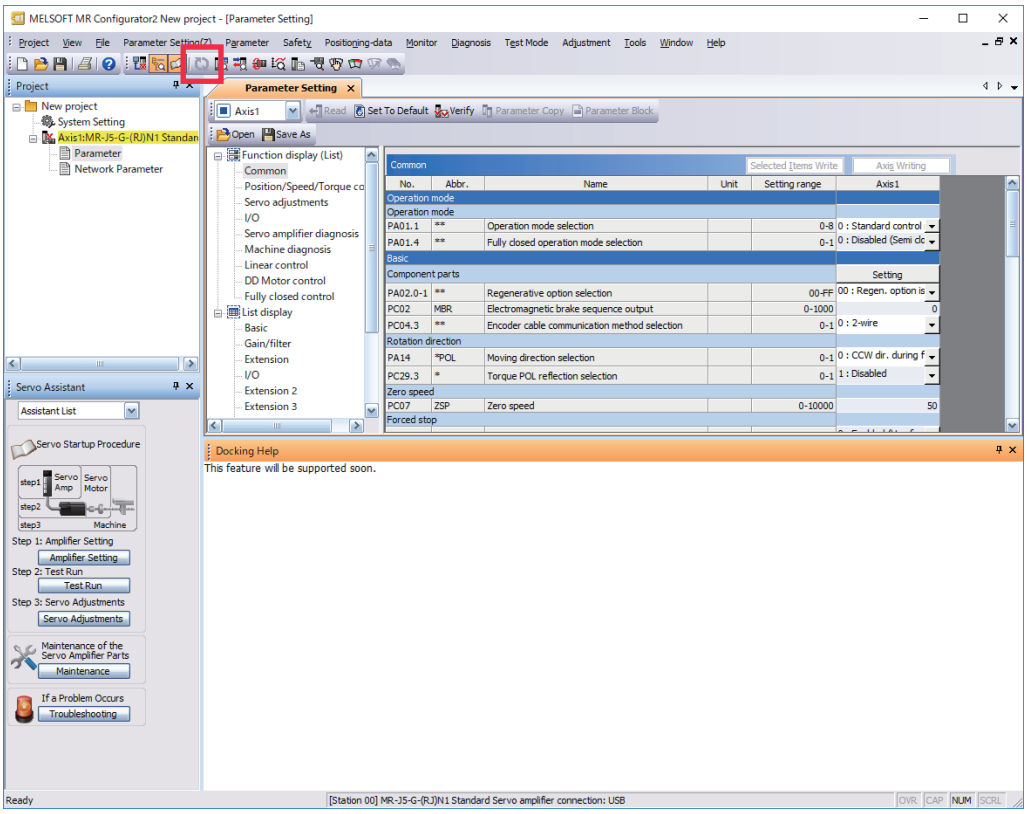

■For EoE communication

Connection via a controller is available on drive units with firmware version C4 or later being used with MR Configurator2 with software version 1.130L or later.

1. Connect the drive unit with the EtherCAT controller and the EtherCAT controller with the personal computer using an Ethernet cable between each equipment. Turn on the drive unit control circuit power supply. Establish the EoE communication between the EtherCAT controller and drive unit according to the manual of the EtherCAT controller to be used.

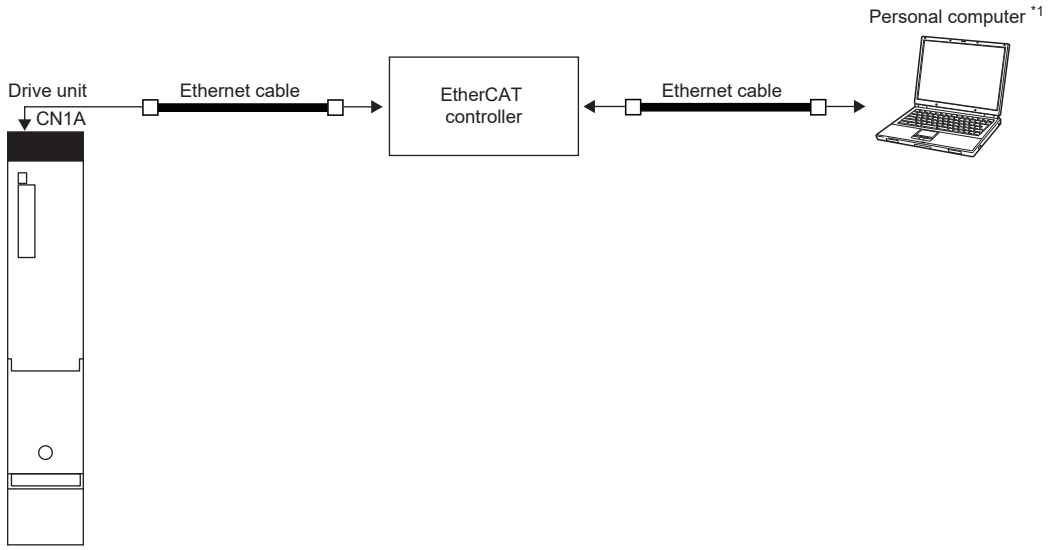

*1 When using a personal computer as the EtherCAT controller, connect the drive unit and the personal computer with an Ethernet cable.

2. Start MR Configurator2 and create a new project. Select the drive unit model. Click the "Switch to Multi-axis Project" button.

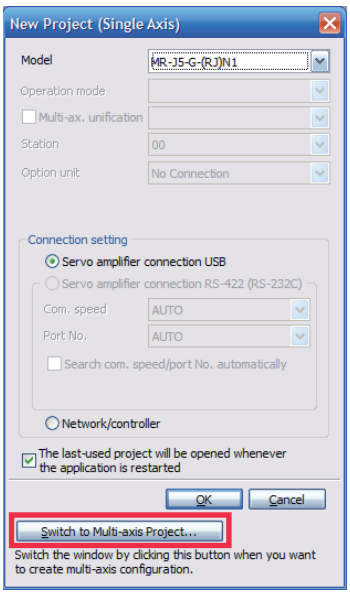

3. When the message "Are you sure you want to cancel the changes?" appears, click the "Yes" button.

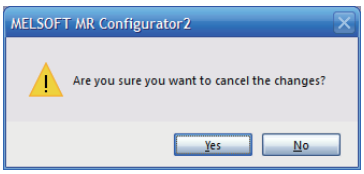

4. Select "EtherCAT" for the connection network. Only "UDP" can be selected for the protocol. Set the time-out and retry as required. Set the drive unit and its IP address for the servo amplifier configuration. The axis number can be set as desired.

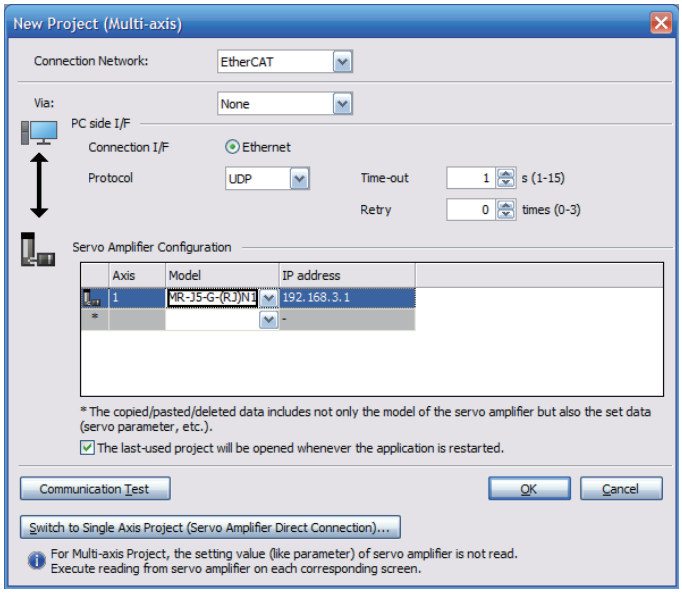

5. Selecting "Parameter" from the project tree opens the "Parameter Setting" screen.

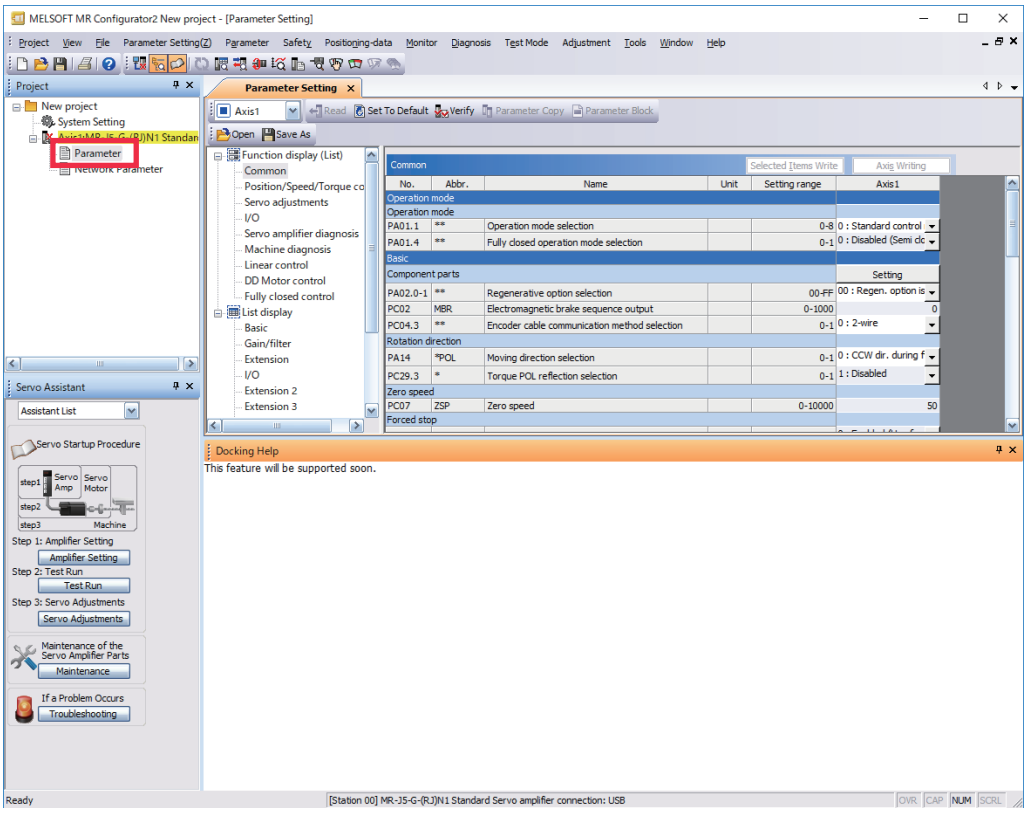

6. Select a group of servo parameters in the selection tree of the "Parameter Setting" window to display and configure the settings.

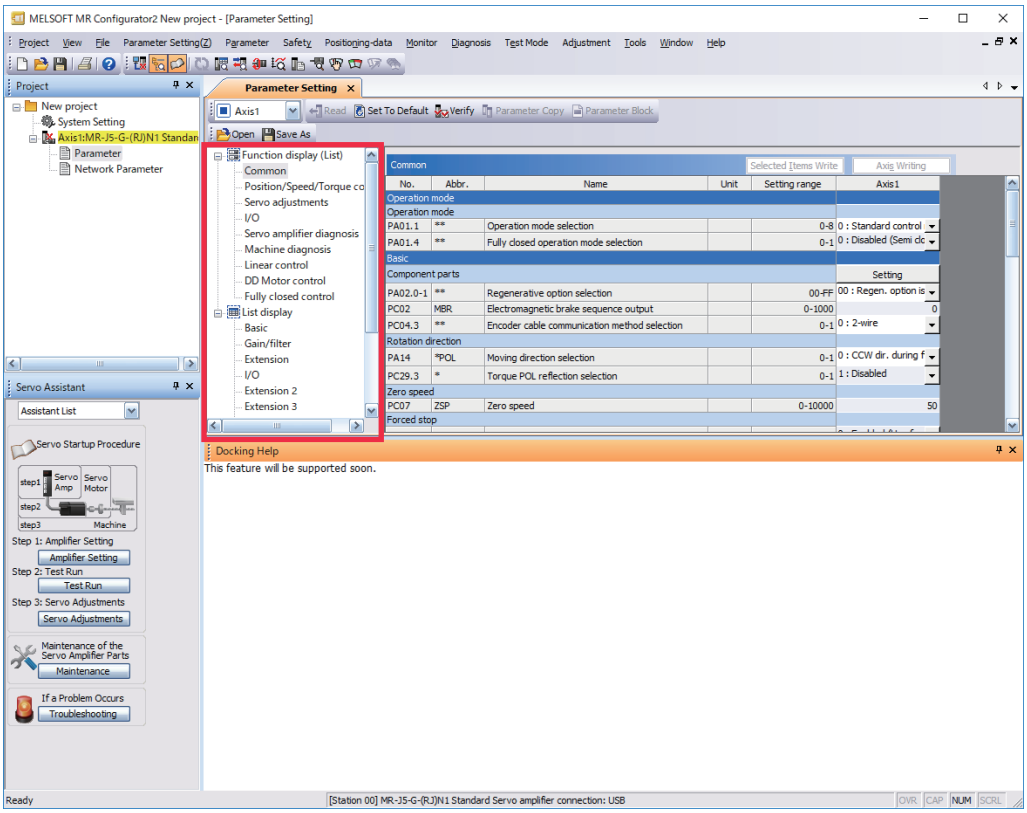

7. After changing the servo parameter, click "Selected Items Write" or "Axis Writing".

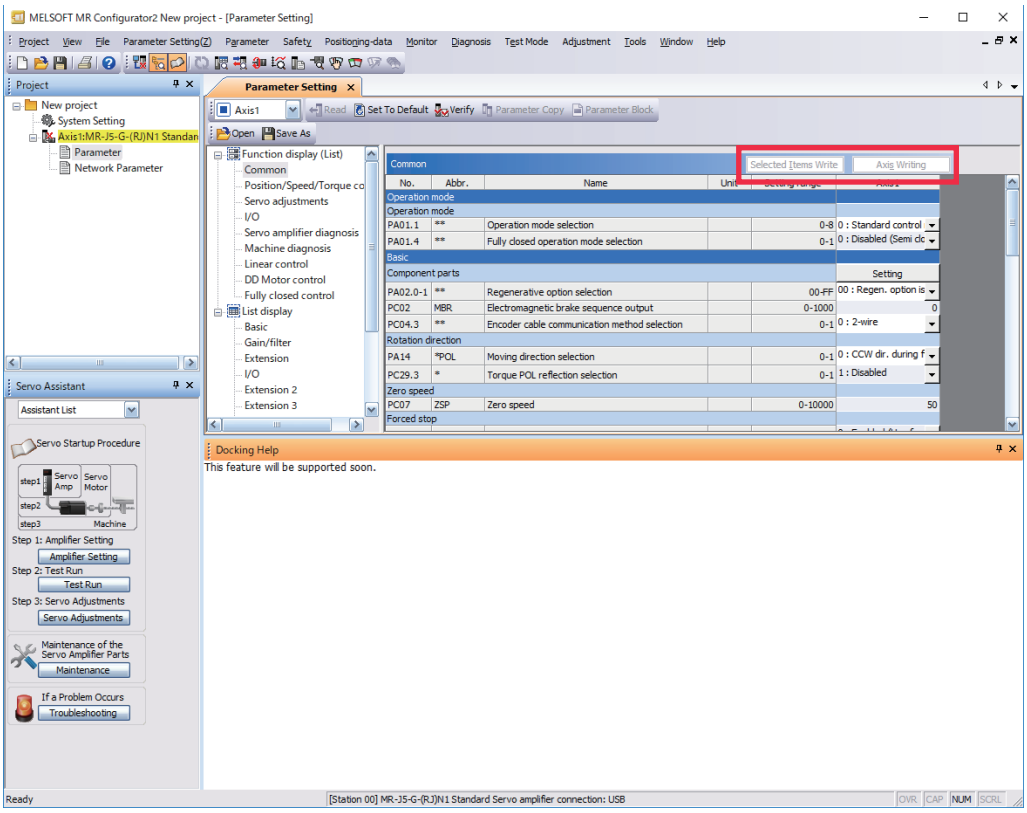

8. Abbreviated servo parameters prefixed with * and servo parameters marked with ** are enabled after the power is cycled or a software reset is performed. Click "Software Reset" in MR Configurator2 to perform the software reset.

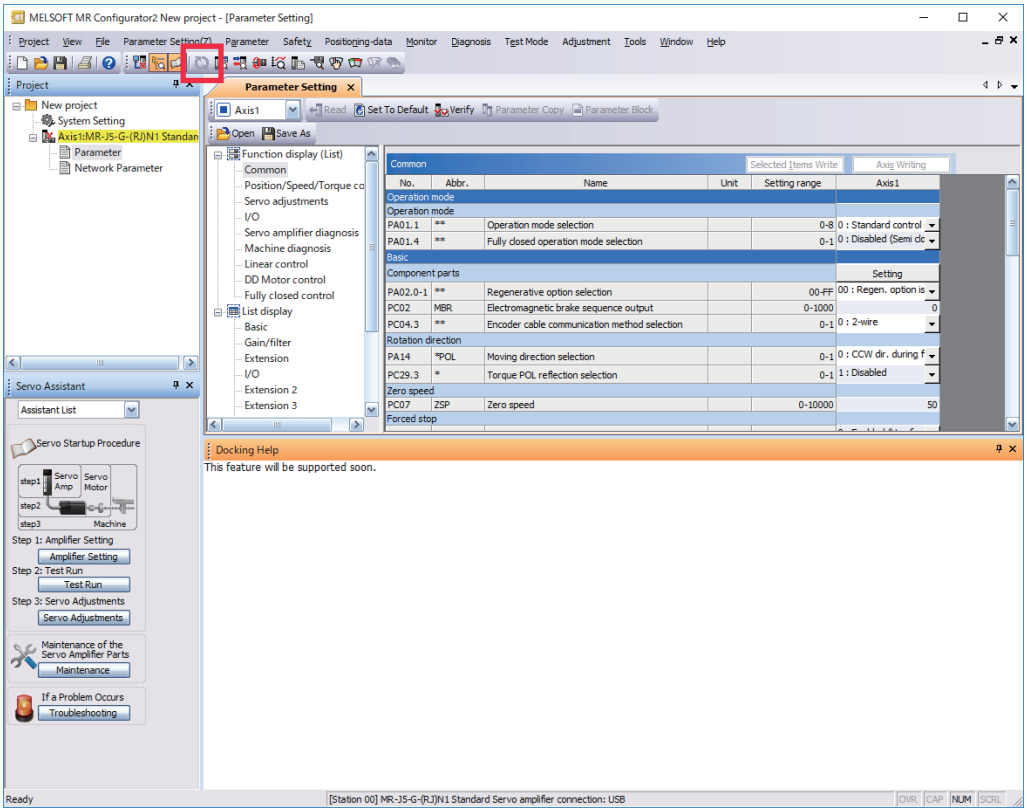

4.1 Turning on drive unit for the first time

Point

- For the controller settings, refer to the relevant controller manual.
- For the gain adjustment, refer to the following manual.

MR-J5 User's Manual (Adjustment)

When turning on the drive unit for the first time, follow the steps below.

Procedure	Description	Reference
1. Installation and wiring	Install and wire the converter unit, drive unit and servo motor.	MR-J5D User's Manual (Hardware)
2. Network protocol setting	When using EtherNet/IP or PROFINET, switch the network protocol.	Page 59 Network protocol switching methods
3. Test operation of the servo motor alone in test operation mode	With the servo motor disconnected from the machine, operate the servo motor at the lowest speed possible, and check whether the servo motor operates correctly.	Page 63 Test operation of the servo motor alone in test operation mode
4. Equipment configuration setting	Set each servo parameter according to the equipment configuration.	Page 64 Equipment configuration setting
5. Controller-related setting	Perform necessary settings according to commands from the controller.	Page 64 Controller-related setting
6. Operation by controller command	Operate the servo motor at the lowest speed possible by giving commands to the drive unit from the controller, and check whether the servo motor operates correctly.	Page 65 Operation by controller command
7. Actual operation	—	—

Network protocol switching methods

When switching the network protocol to be used, follow the procedures described in this section.

The network protocol to be used can be set in [Pr. PN13.0-3 Network protocol setting].

Setting value of [Pr. PN13.0-3]	Setting details
0100h (Factory setting)	EtherCAT
0800h	EtherNet/IP
1000h	PROFINET

There are multiple setting methods. Select the optimum one for your usage.

For the connection of Ethernet cables, refer to "Connecting Ethernet cables" in the following manual.

MR-J5-G-N1/MR-J5W-G-N1 User's Manual (Communication Function)

Item	Description	Reference
Setting using MR Configurator2 via a USB connection	Manually set each axis using MR Configulator2. Use this method when switching the network protocol for each axis individually via a USB connection.	Page 60 Setting using MR Configurator2 via a USB connection
Setting using MR Configurator2 via a network	Manually set [Pr. PN13] of multiple axes in a batch using the multi-axis project in MR Configulator2. Use this method when connecting multiple axes by Ethernet and switching the network protocol for them in a batch.	Page 60 Setting using MR Configurator2 via a network
Automatic setting using a controller connection	Connect to a controller to automatically set [Pr. PN13] without MR Configurator2. Use this method when switching the network protocol for multiple axes in a batch without MR Configurator2.	Page 61 Automatic setting using a controller connection
Setting with a switch	Configure specific rotary switch setting to set [Pr. PN13] at startup of the drive unit. Use this method when switching the network protocol for each axis individually without MR Configurator2.	Page 61 Setting with a switch

Switching procedures

■Setting using MR Configurator2 via a USB connection

1. Start the drive unit and connect it to a personal computer using a USB cable.
2. Set [Pr. PN13].
3. Power off the drive unit. Communication will be available with the set network protocol at the next power-on.

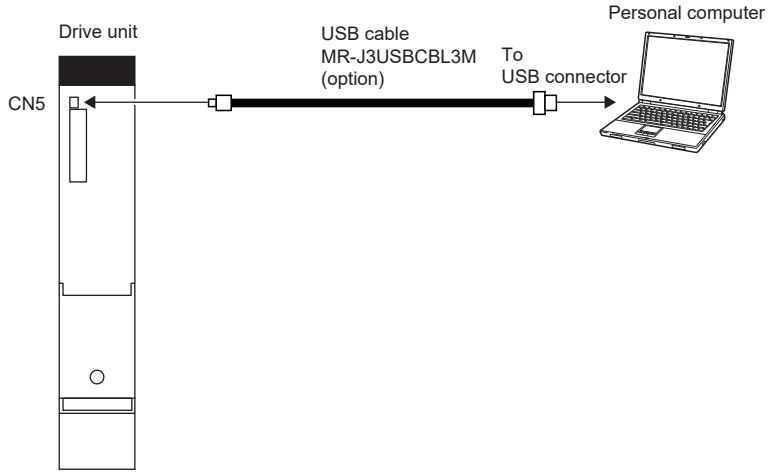

■Setting using MR Configurator2 via a network

1. Start the drive unit in the network setting mode.

☞ Page 62 Starting up the network setting mode

2. Connect the drive unit and personal computer using a Ethernet cable.
3. Start the multi-axis project in MR Configurator2 and set the IP address of the drive unit in the "Servo amplifier IP address change" window.
4. Set [Pr. PN13].
5. Power off the drive unit and set SW3-2 to SW3-4 to "OFF (down)". Communication will be available with the set network protocol at the next power-on.

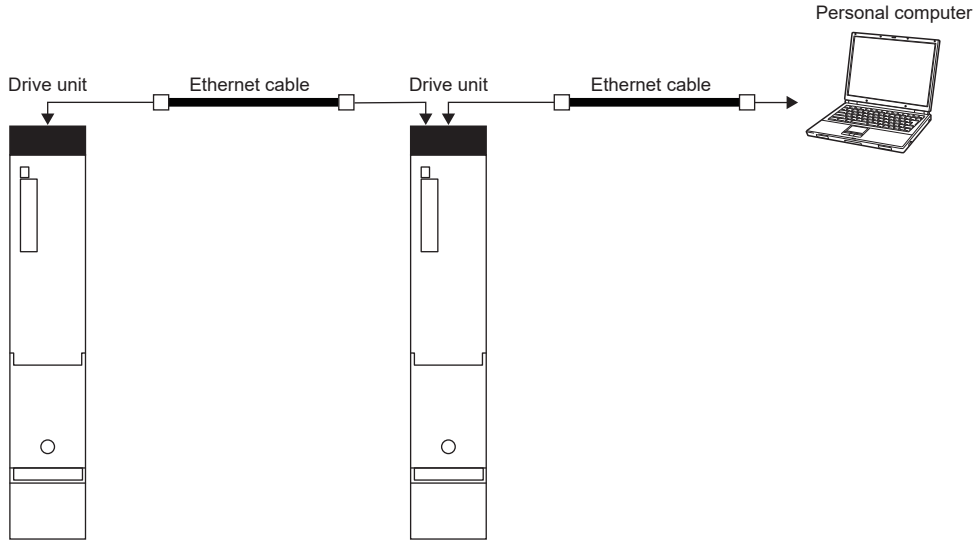

■Automatic setting using a controller connection

Point

- Set the network protocol detected first after startup of the drive unit.
- The 7-segment LED display changes from on to blinking approximately one second after the completion of setting.
- Automatic setting using a controller connection is unavailable depending on the network configuration such as the termination axis. If the setting has failed, refer to the following and set it again.

☞ Page 61 Setting with a switch

1. Start the drive unit in the network setting mode.

☞ Page 62 Starting up the network setting mode

2. Connect the drive unit to a controller. When connection to an upper controller is detected, [Pr. PN13] is automatically set and the display blinks according to the network protocol being set.

3. Power off the drive unit and set SW3-2 to SW3-4 to "OFF (down)". Communication will be available with the set network protocol at the next power-on.

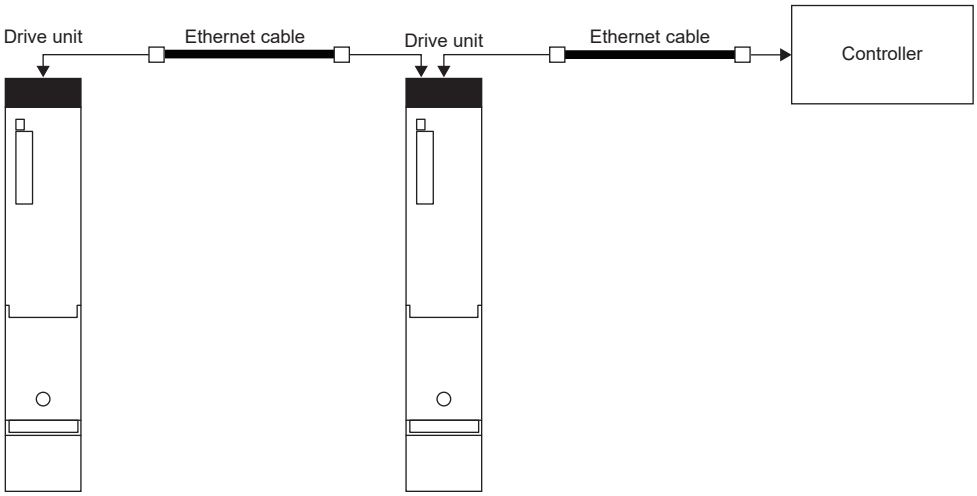

■Setting with a switch

1. Set the rotary switch according to the network protocol to be used.

SW1	SW2	Network protocol
F	0 to B	For manufacturer setting
F	C	PROFINET
F	D	EtherNet/IP
F	E	EtherCAT

2. Start the drive unit in the network setting mode.

☞ Page 62 Starting up the network setting mode

3. The display blinks according to the network protocol being set. At this time, [Pr. PN13] is not reset even though the connection with an upper controller is detected.

4. Power off the drive unit and set SW3-2 to SW3-4 to "OFF (down)". Communication will be available with the set network protocol at the next power-on.

Starting up the network setting mode

The network setting mode can be set with the DIP switches. In the network setting mode, the connection to an upper controller can be detected and [Pr. PN13] can be automatically set.

Point

When the drive unit is not connected to an upper controller, MR Configurator2 can be used by Ethernet by setting the IP address of the drive unit from the multi-axis project in MR Configurator2. Some IP addresses including the broad cast address cannot be set. Check the available IP addresses for the network to be used.

■Startup method

1. Power off the drive unit.

2. Set the network setting switch (SW3-2) or disabling control axis switches (SW3-2 to SW3-4) to "ON (up)". Set the test operation select switch (SW3-1) to "OFF (down)" at this time.

Point

- If all the DIP switches (SW3) are set to "ON (up)", the drive unit is switched to the operation mode for manufacturer setting and "off" will be displayed. The drive unit cannot be used in this mode. Thus, set the DIP switches (SW3) correctly according to this section.
- To apply the settings of all switches, cycle the control circuit power supply.

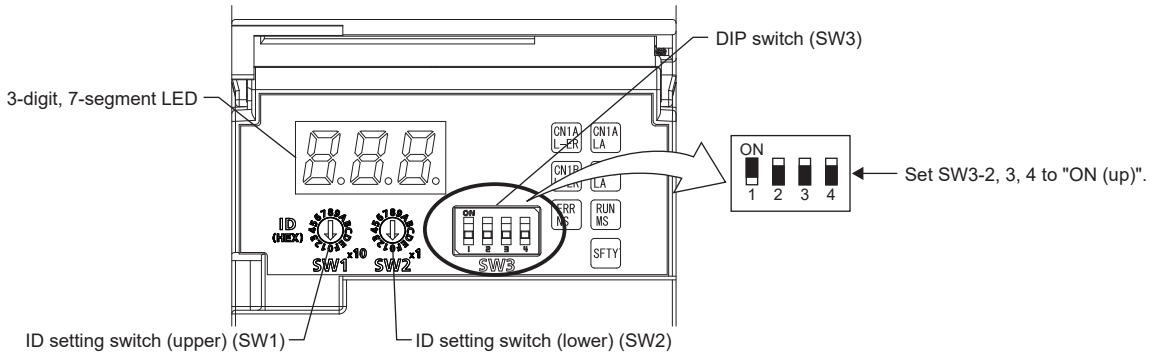

3. Power on the drive unit. The drive unit starts up in the network setting mode. When connection to an upper controller is detected, the display turns on as follows according to the network protocol in [Pr. PN13] for the next startup.

Network protocol	Display
EtherCAT	ECT
EtherNet/IP	E.P
PROFINET	PnT

Point

When the drive unit is started up in the network setting mode with the rotary switches (SW1/SW2) set to F0 to FE, [Pr. PN13] will be set according to the value set with the rotary switches at startup of the drive unit. Refer to the following for details.

☞ Page 61 Setting with a switch

Test operation of the servo motor alone in test operation mode

Point

- If the servo motor operates in an unintended manner, stop the servo motor with EM2 (Forced stop 2).

Check that the drive unit and servo motor operate normally. With the servo motor disconnected from the machine, use the test operation mode and check whether the servo motor operates correctly. This section describes how to check the servo motor operation in the JOG operation. The test operation also includes the positioning operation and program operation.

☞ Page 67 Test operation

In the linear servo motor control mode, the JOG operation cannot be performed. Check the linear servo motor operation status by using the positioning operation or by other means.

☞ Page 69 Motor driving by test operation

1. Turn off the power.

2. Turn "ON (up)" the test operation select switch (SW3-1). When performing test operation with multiple MR-J5D_-_G_ connected to one power regeneration converter unit, turn "ON (up)" the test operation select switch (SW3-1) of all the MR-J5D_-_G_ connected to the power regeneration converter unit.

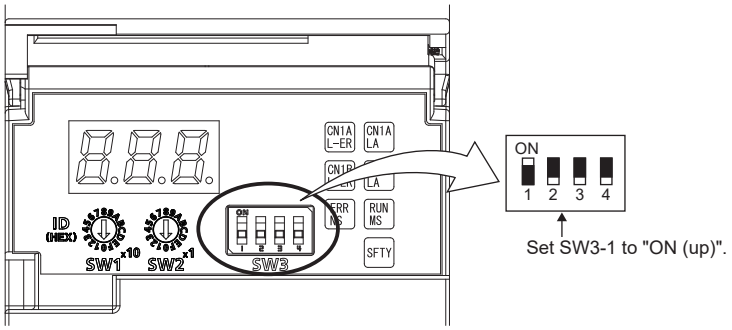

3. Turn on the power supply of the converter unit and drive unit. Once initialization is complete, the display will change as follows.

Test operation status display

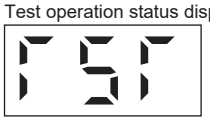

The display of a 1-axis drive unit is shown as an example.

4. Open the "JOG Mode" screen of MR Configurator2.

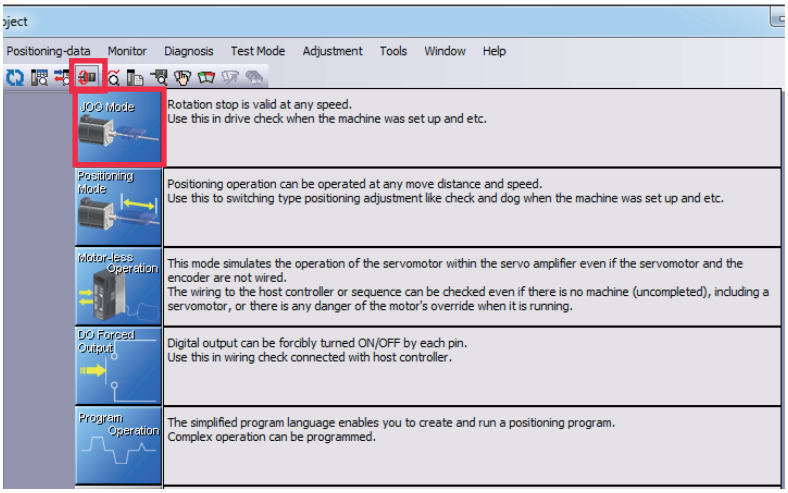

5. To operate the servo motor, input the motor speed and acceleration/deceleration time constants, then click "Forward CCW" or "Reverse CW". The servo motor operates only while the button is being clicked. Give a low speed command at first and check the operation status.

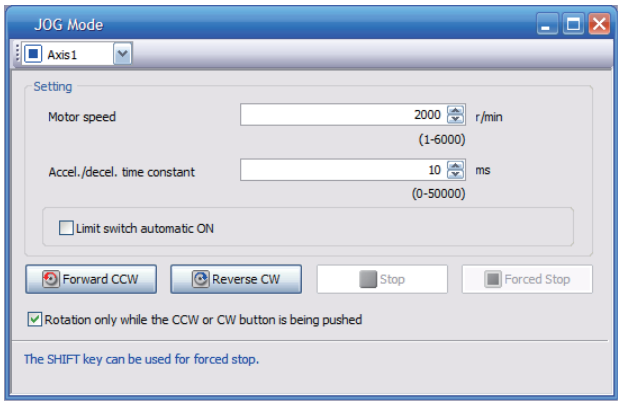

6. After the test operation is complete, turn off the power and "OFF (down)" the test operation select switch (SW3-1).

Equipment configuration setting

Set the servo parameters for each function according to the equipment configuration. For details, refer to the following manual.

MR-J5 User's Manual (Function)

Item	Description
Rotation/travel direction selection	To change the rotation/travel direction (POL), change the servo parameter.
Stroke limit function	Limit switches can be used to limit travel intervals of the servo motor. Configure the settings according to the connection method of the limit switch.
In-position setting	Positioning completion status can be checked with in-position. Set this as necessary.
Forced stop deceleration function	Stops the servo motor at EM2 (Forced stop 2) off. Perform settings such as the deceleration time constant.
Vertical axis freefall prevention function	For vertical axes, this function pulls up the shaft slightly. When using a servo motor with an electromagnetic brake for a vertical axis, perform settings as required.

Controller-related setting

Refer to the applicable network instruction manual for the network connection setting.

Network	Reference
EtherCAT	Refer to "Startup" in the following manual. MR-J5-G-N1/MR-J5W-G-N1 User's Manual (Communication Function)
EtherNet/IP	
PROFINET	

Set the servo parameter using the controller according to the control mode to be used.

Item	Description	Reference
Network standard mode	Operates in the modes such as csp/csv/cst specified in CiA 402.	Refer to "CONTROL MODE" in the following manual. MR-J5 User's Manual (Function)
Positioning mode (point table method)	This function operates the servo motor according to the setting values by selecting the point table with preset 255 points.	Refer to "POSITIONING MODE (POINT TABLE METHOD) (CP)" in the following manual. MR-J5 User's Manual (Function)

Set each servo parameter that is necessary for the operation using controller commands.

Item	Description	Reference
Command unit selection function	This function enables the unit of speed command to be selected. The initial setting for the unit of speed command is pulses/s.	Refer to "Command unit selection function" in the following manual. MR-J5 User's Manual (Function)
Electronic gear setting	Perform the settings related to the controller command unit and amplifier command unit.	Refer to "Electronic gear function" in the following manual. MR-J5 User's Manual (Function)
Homing	To perform homing with the function of the amplifier without using the homing function of the controller, perform the necessary settings.	Refer to "CONTROL MODE" in the following manual. MR-J5 User's Manual (Function)

Operation by controller command

Confirm that the servo motor operates correctly under the commands from the controller. Give a low speed command at first to check the servo motor operations such as the rotation direction. If the servo motor does not operate in the intended direction, check the input signal.

1. Display the Display All window in MR Configurator2. Confirm that there is no error in the items such as servo motor speed and load ratio.

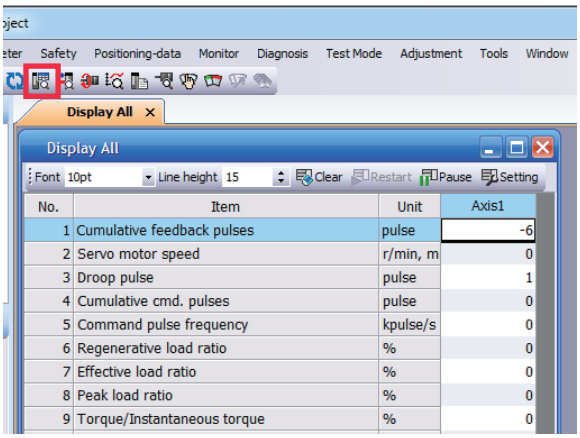

2. Display the I/O Monitor window. Confirm that there is no error in the I/O signal.

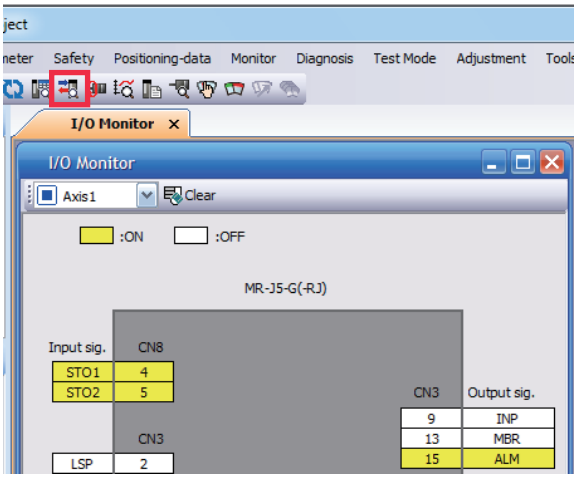

4.2 Instructions on startup

Instructions for power-on

- When the absolute position detection system is used in a rotary servo motor, [AL. 025 Absolute position erased] occurs the first time that the power is turned on and the servo motor cannot be changed to servo-on status. Shut off the power once, then cycle the power to deactivate the alarm.
- If the power is turned on while the servo motor is being rotated by an external force, an alarm may occur. Make sure that the servo motor is not operating before turning on the power. In addition, refer to the manual for the servo motor or encoder being used.

Stop

If any of the following situations occur, the drive unit suspends and stops the operation of the servo motor. If the servo motor is operated by the network command, the servo motor may be stopped by the controller command.

Operation/command	Stopping condition
Alarm occurrence	The servo motor decelerates to a stop. There are also alarms that activate and stop the dynamic brake. For details of alarms, refer to the following manual. 📖MR-J5 User's Manual (Troubleshooting)
EM2 (Forced stop 2) off	The servo motor decelerates to a stop. [AL. 0E6 Servo forced stop warning] occurs. In the torque mode, EM2 functions the same as EM1.
STO (STO1 and STO2) off	The base circuit is shut off and the dynamic brake operates to stop the servo motor.
Limit switch off	If LSP (Forward rotation stroke end), LSN (Reverse rotation stroke end), FLS (Upper stroke limit), or RLS (Lower stroke limit) is turned off, the servo motor will stop slowly and become in the servo-lock state. Operation in the opposite direction is possible.

Instructions for network disconnection

To turn off the system power and disconnect the drive unit from the network, specific procedures may be required. For details, refer to "Disconnecting the communication" and "Network disconnection procedure" in the following manual.
📖MR-J5-G-N1/MR-J5W-G-N1 User's Manual (Communication Function)

4.3 Troubleshooting at startup

Investigation by using MR Configurator2.

The reason that the servo motor does not rotate can be investigated via MR Configurator2.
The cause that the servo motor fails to rotate is acquired from the drive unit of the target axis, and displayed on "No Motor Rotation".
The window will remain blank when no cause exists. "- - - -" is displayed when off-line or the cause cannot be acquired.

4.4 Duplicate setting

Drive unit parameters for which setting has been completed can be copied to another drive unit. Use this function when replacing the drive unit of equipment with another drive unit during operation, and when starting up multiple devices with the same configuration.

Restrictions

■The following data is not duplicated. Set them as required after the duplication.

Item	Description
Homing	The information of the home position is not duplicated. Execute homing again.
Machine service life diagnosis	Machine service life diagnosis information may not be duplicated. Refer to "Machine diagnosis" in the following manual, and perform required settings. 📖MR-J5 User's Manual (Function)

■The following data is not duplicated.

- Alarm history data
- Drive recorder data

Duplication using MR Configurator2

1. The data set in MR Configurator2 can be saved as a project.
2. To copy the project to a different drive unit, open the project and then connect the drive unit and a personal computer via a USB cable. Turn on the drive unit control circuit power supply.
3. Write the required data in MR Configurator2. After the writing is completed, cycle the power or perform a software reset as necessary.

4.5 Test operation

Using the test operation function enables the machine operation to be checked before the actual operation. With a personal computer and MR Configurator2, operations such as the JOG operation, positioning operation, output signal forced output, and program operation can be performed.

Precautions

- The test operation mode is designed for checking servo operation. This mode is not for checking machine operation. Do not use this mode with the machine. Use this mode only with the servo motor.

Execution method

Test operation mode is enabled by MR Configurator2. To set to the normal operation mode again after executing the test operation mode, cycle the power or perform a software reset.

- Perform the test operation after the forced stop has been released. For details of the forced stop, refer to "Forced stop deceleration function" in the following manual.

📖MR-J5 User's Manual (Function)

Test operation mode

Setting the drive unit to the test operation mode enables the test operation while the personal computer and drive unit are connected via a USB cable.

1. Turn off the power.

2. Turn "ON (up)" the test operation select switch (SW3-1). When performing test operation with multiple MR-J5D_-_G_ connected to one power regeneration converter unit, turn "ON (up)" the test operation select switch (SW3-1) of all the MR-J5D_-_G_ connected to the power regeneration converter unit.

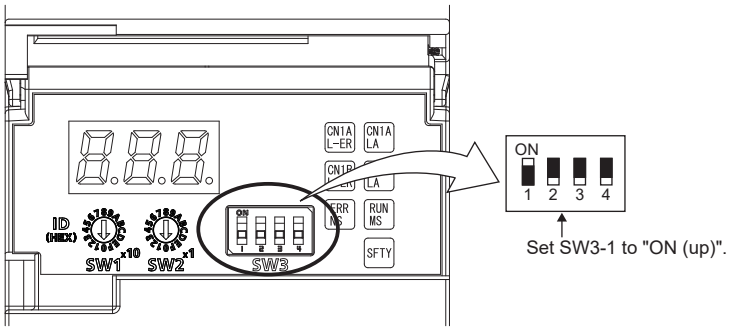

3. Turn on the power supply of the converter unit and drive unit. Once initialization is complete, the display will change as follows.

Test operation status display

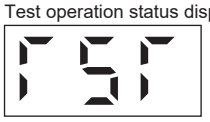

4. Use MR Configurator2 to perform the test operation.

☞ Page 69 Motor driving by test operation

5. After the test operation is complete, turn off the power and "OFF (down)" the test operation select switch (SW3-1).

Motor driving by test operation

JOG operation

The JOG operation can be performed when there is no command from the controller. The motor can be operated at the specified speed. Operate the motor using the JOG Mode screen of MR Configurator2.

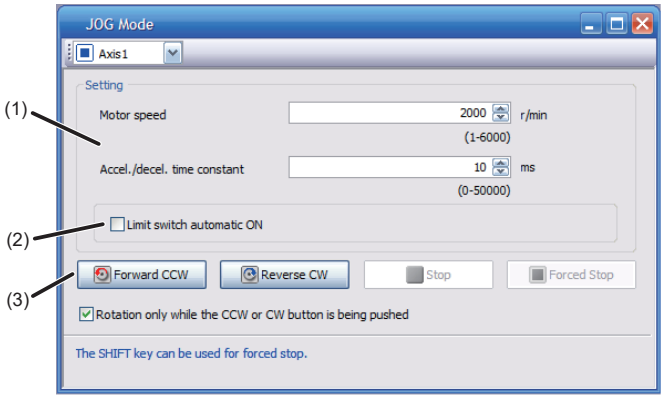

■Motor operation setting (1)

Set the motor speed and acceleration/deceleration time constants for JOG operation. When changing the speed to the permissible speed, set the speed in [Pr. PA28.4 Speed range limit selection].

■Limit switch automatic ON (2)

JOG operation can be performed when the limit switch is not connected. Be sure to avoid causing a collision while performing the operation.

■Operation (3)

The servo motor can be started, paused, stopped, or forcibly stopped. Clicking "Forward CCW" or "Reverse CW" starts the operation.

When "Rotation only while the CCW or CW button is being pushed" is not selected, clicking "Forward CCW" or "Reverse CW" will perform operation until "Stop" or "Forced Stop" is clicked.

Positioning operation

Positioning operation can be performed without the controller. Operate the motor using the Positioning Mode screen of MR Configurator2.

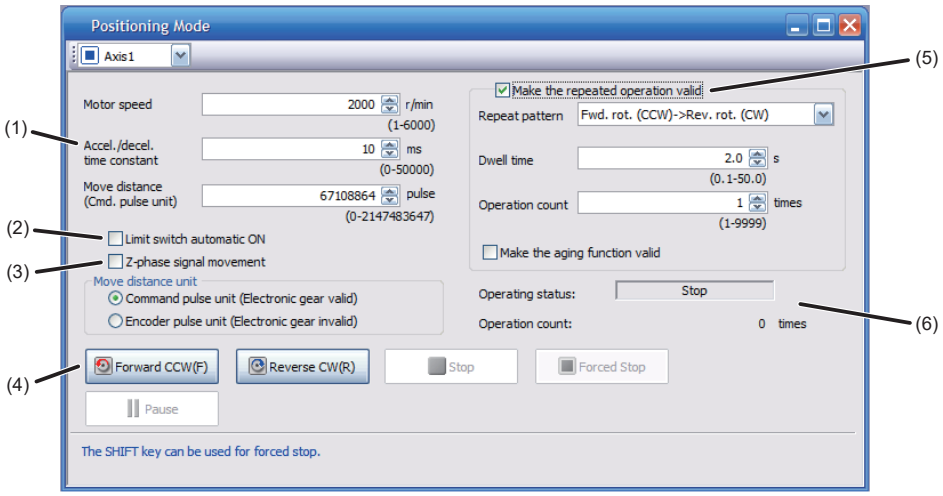

■Motor operation setting (1)

Set the motor speed, acceleration/deceleration time constants, and travel distance in the positioning operation mode. When changing the speed to the permissible speed, set the speed in [Pr. PA28.4 Speed range limit selection].

■Limit switch (2)

Select "Limit switch automatic ON" to perform the positioning operation when the limit switch is not connected. Be sure to avoid causing a collision while performing the operation.

■Move until Z-phase signal (3)

When "Z-phase signal movement" is selected, the servo motor moves until the first Z-phase signal after positioning operation.

■Operation (4)

The servo motor can be started (CCW/CW), paused, stopped, or forcibly stopped. Clicking "Operation Start" starts the operation in the specified operation condition.

■Repeat operation (5)

Selecting "Make the repeated operation valid" enables the repeat operation. Selecting "Make the aging function valid" enables the continuous operation until clicking "Stop" or "Forced Stop". Set the repeat pattern, the dwell time, and the number of operations.

■Operation status (6)

The operation status during the repeat operation and the number of operations are displayed.

Program operation

Positioning operation using multiple operation patterns can be performed without a controller. Operate the motor using the Program Operation screen of MR Configurator2. For details, refer to Help of MR Configurator2.

1. Open the Program Operation screen of MR Configurator2.

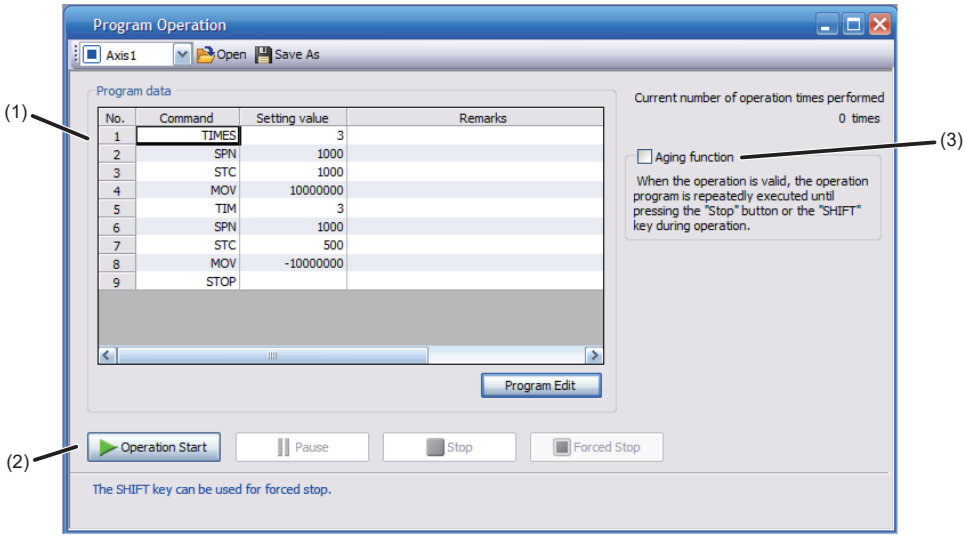

No.	Item	Screen operation
(1)	Program display	Displays the program. To edit the display item, click "Program Edit".
(2)	Operation	The servo motor can be started (CCW/CW), paused, stopped, or forcibly stopped. Clicking "Operation Start" starts the operation.
(3)	Repeat execution	Displays the number of execution times. Selecting "Aging function" enables the repeated operation of the operation program.

2. Clicking "Program Edit" in the program operation screen opens the Program Edit screen.

Input the program and click "OK". For program commands, refer to Help of MR Configurator2.

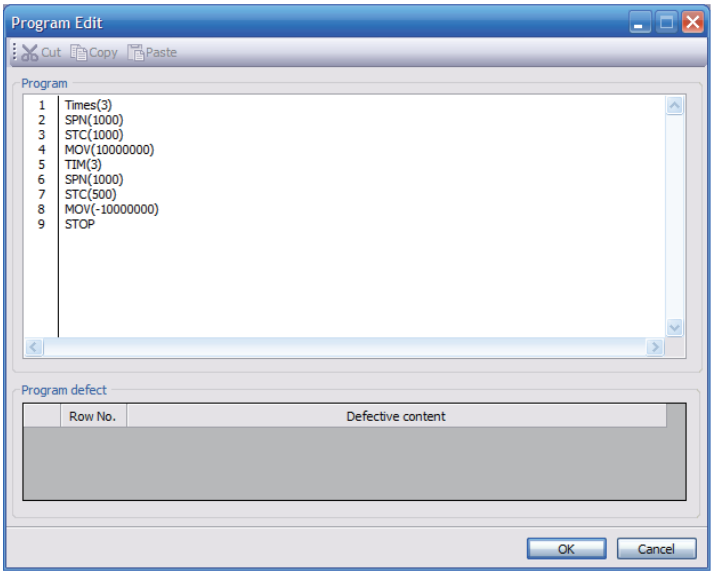

Single-step Feed

This function enables test operation in accordance with the point table. Configure the settings of the point table operation in advance. For the point table operation, refer to "POSITIONING MODE (POINT TABLE METHOD) (CP)" in the following manual.

📖MR-J5 User's Manual (Function)

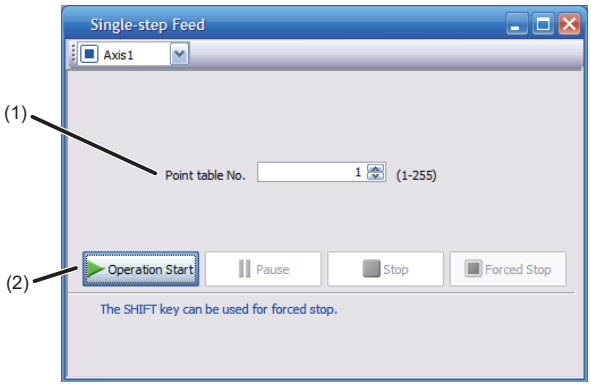

No.	Item	Screen operation
(1)	Point table No.	Specify the point table number to be operated.
(2)	Operation	The servo motor can be started (CCW/CW), paused, stopped, or forcibly stopped. Clicking "Operation Start" starts the operation in accordance with the point table.

Motor-less operation

Point

- The motor-less operation cannot be used in the fully closed loop control mode, linear servo motor control mode or direct drive motor control mode.

Without connecting a servo motor to the drive unit, output signals or status displays can be provided in response to the controller commands as if the servo motor is actually running. This operation can be used to check the sequence of a controller. Use this operation after the forced stop has been released. Use this operation with the drive unit connected to the controller.

To perform the motor-less operation, set [Pr. PC05.0 Motor-less operation selection] to "1" (enabled). To terminate the motor-less operation, set [Pr. PC05.0] to "0" (disabled).

To apply the motor-less operation settings, cycle the power or perform a software reset.

Load conditions

The operation is performed in the following conditions. Note that the conditions may differ from those of actual machines.

Load item	Condition
Load torque	0
Load to motor inertia ratio	[Pr. PB06 Load to motor inertia ratio/load to motor mass ratio]

Alarm

In the motor-less operation, some alarms and warnings are not generated. The following are examples of alarms which do not occur.

- [AL. 016 Encoder initial communication error 1]
- [AL. 01E Encoder initial communication error 2]
- [AL. 01F Encoder initial communication error 3]
- [AL. 020 Encoder normal communication error 1]
- [AL. 021 Encoder normal communication error 2]
- [AL. 025 Absolute position erased]
- [AL. 092 Battery cable disconnection warning]
- [AL. 09F Battery warning]

Output signal (DO) forced output

This function forcibly switches the output signals on and off regardless of the servo status. Use this function for purposes such as checking output signal wiring. Operate this function on the DO Forced Output screen of MR Configurator2.

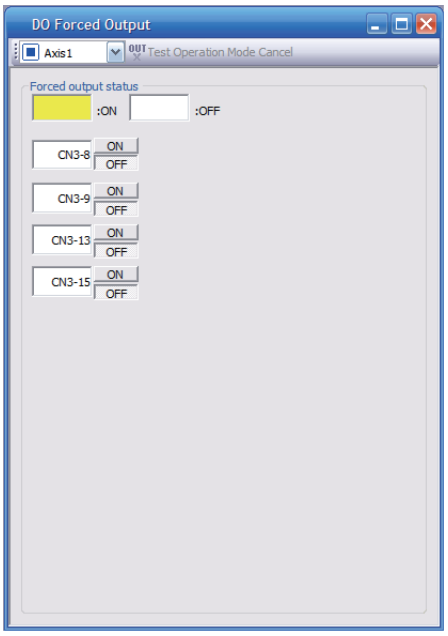

Each output signal can be turned on/off by clicking the ON/OFF button next to its name. After checking, click "Test Operation Mode Cancel" and terminate the output signal (DO) forced output.

4.6 Drive unit setting initialization

Drive unit settings can be initialized by using the engineering software (MR Mode Change packed with MR Configurator2). However, information related to the drive unit, including power-on cumulative time and the number of relays on/off, is not initialized.

Point

- The storage area of the drive unit has a limit for the number of writings. Do not use this function frequently.
- Execute the initialization with the drive unit disconnected from the network and directly connected to MR Mode Change via a USB cable.

Initialization procedure by MR Mode Change

Open MR Mode Change and use a USB cable to connect the drive unit that will be initialized with a personal computer. Turn on the drive unit control circuit power supply.

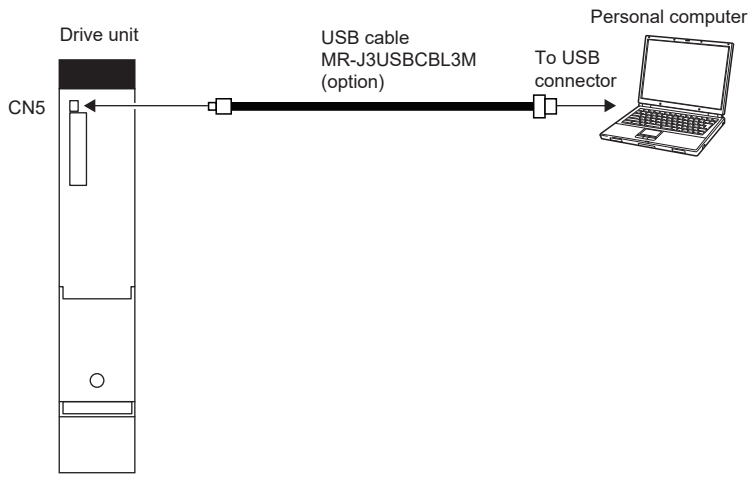

Confirm that "Reset to factory settings" is selected, then click "Write". After the writing is completed, cycle the power or perform a software reset.

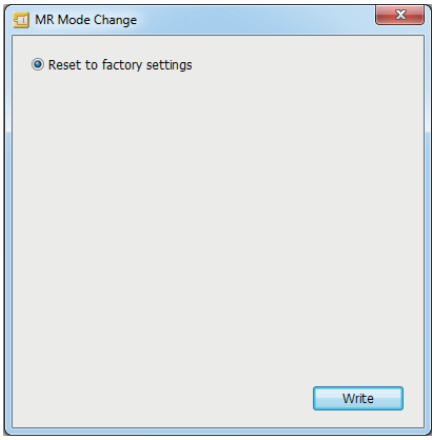

Cycling the power or resetting the software initializes the setting of the drive unit at startup. Confirm that the initialization has completed by reading the settings from the drive unit.

5 MAINTENANCE, INSPECTION AND PARTS REPLACEMENT

5.1 Inspection items

Precautions

- Do not disassemble, repair, or modify the product.
- For repair and parts replacement, contact your local sales office.
- To prevent a malfunction, do not perform an insulation resistance test (megger test) on the drive unit.

Periodic inspection

Perform the following inspections.

- Check for loose terminal block screws. Retighten any loose screws.
- Check the cables and the like for scratches or cracks. Inspect them periodically according to operating conditions especially when the servo motor is movable.
- Check that the connector is securely connected to the drive unit.
- Check that the wires are not coming out from the connector.
- Check for dust accumulation on the drive unit.
- Check for unusual noise generated from the drive unit.
- Make sure that the emergency stop circuit operates properly such that an operation can be stopped immediately and a power is shut off by the emergency stop switch.

5.2 Parts with a service life

This section describes the service life of parts. The service life varies depending on the operating methods and environment. If any fault is found in a part, it is necessary to replace it immediately regardless of its service life. For parts replacement, please contact your local sales office. Customers can replace the cooling fan by purchasing a fan unit. For details, refer to "Fan unit replacement procedure" in the following manual.

📖MR-J5D User's Manual (Hardware)

Part name	Recommended service life
Relay	Total number of power-on, operation of dynamic brake, and forced stops: 100,000 times
Cooling fan	50,000 hours to 70,000 hours (7 to 8 years)

Relays

Contact faults occur due to contact wear arisen from switching currents. A relay will reach the end of its service life if the following actions are performed a total of 100,000 times: powering on the servo amplifier, inputting the dynamic brake operation, and inputting the forced stop. In addition, the service life of a relay may vary depending on the power supply capacity.

For the approximate number of times a dynamic brake can be used, refer to "Dynamic brake characteristics" in the following manual.

📖MR-J5D User's Manual (Hardware)

Drive unit cooling fan

The cooling fan bearings will reach the end of their service life in 50,000 hours to 70,000 hours. Therefore, the cooling fan must be replaced after seven to eight years of continuous operation as a guideline. If unusual noise or vibration is found during inspection, the cooling fan must also be replaced. The service life has been calculated in an environment which contains no corrosive gas, flammable gas, oil mist, or dust. The average annual ambient temperature was 40 ˚C.

MEMO

6 COMPLIANCE WITH GLOBAL LAWS AND REGULATIONS

Converter units and drive units refer to servo amplifiers in this chapter.
This chapter provides information common among AC servo amplifiers. Information that is not applicable to MR-J5 servo amplifier/other equipment combinations is also included.

6.1 Compliance with global standards

For compliance with the standards of Europe/UK, United States/Canada, and South Korea, refer to the following manual.
Safety Instructions and Precautions for MR-J5D AC Servos (IB(NA)-0300527)

6.2 Handling of AC servo amplifier batteries for the United Nations Recommendations on the Transport of Dangerous Goods

The transportation of lithium metal batteries is regulated under the Technical Instruction (ICAO-TI) by the International Civil Aviation Organization (ICAO) and the International Maritime Dangerous Goods Code (IMDG Code) by the International Maritime Organization (IMO), which are based on the United Nations Recommendations on the Transport of Dangerous Goods (hereinafter Recommendations of the United Nations).
This section describes the handling of lithium metal batteries in air transportation that has been changed in response to the IATA (International Air Transport Association) Dangerous Goods Regulations 63rd Edition issued on January 1, 2022, and the handling of lithium metal batteries in maritime transportation that has also been changed.

Target model

Battery (cell)

Model	Option model	Type	Lithium content	Mass of battery	Remark
ER6	MR-J3BAT	Cell	0.65 g	16 g	Each battery (cell) contains more than 0.3 grams of lithium content and must be handled as dangerous goods (Class 9) for certain packaging requirements.
	MR-J3W03BATSET	Cell	0.65 g	16 g	
ER17330	MR-BAT	Cell	0.48 g	13 g	
	A6BAT	Cell	0.48 g	13 g	

Battery unit (assembled)

Model	Option model	Type	Lithium content	Mass of battery	Remark
ER6	MR-J2M-BT_	Assembled battery (Seven cells)	4.55 g	112 g	The assembled battery contains more than two grams of lithium content and must be handled as dangerous goods (Class 9) regardless of packaging requirements.
CR17335A	MR-BAT6V1	Assembled battery (Two cells)	1.20 g	34 g	Each battery (cell) contains more than 0.3 grams of lithium content and must be handled as dangerous goods (Class 9) for certain packaging requirements.
	MR-BAT6V1SET_	Assembled battery (Two cells)	1.20 g	34 g	
	MR-BAT6V1BJ	Assembled battery (Two cells)	1.20 g	34 g	

Purpose

To enable safer transportation of lithium metal batteries.

Handling during transportation

This section describes how to handle lithium metal batteries in transportation. The batteries alone transported by air are classified as UN3090, and the batteries packed with or contained in equipment transported by air are classified as UN3091. Lithium metal batteries are classified as SP188 when transported by sea as non-dangerous goods.

Air transportation of lithium metal batteries alone

Packaging requirements	Classification	Main requirements
Lithium content per cell = 1 g Lithium content per battery = 2 g	UN3090 PI968 Section IB	The total battery weight per package must be 10 kg or less. The package must pass a 1.2 m drop test, and a lithium battery mark (size: 100 × 100 mm) must be attached on the package. The batteries must be handled conforming to Class 9 Dangerous Goods Regulations (e.g.: displaying the lithium battery hazard label).
Lithium content per cell > 1 g Lithium content per battery > 2 g	UN3090 PI968 Section IA	The total battery weight per package must be 35 kg or less. The package must comply with UN specification packing requirements and be handled complying with Class 9 Dangerous Goods Regulations (e.g.: displaying the lithium battery hazard label).

Transportation of lithium metal batteries alone as cargo on passenger aircraft has been prohibited since January 1, 2015. Lithium metal batteries can be transported by sea or cargo aircraft.

Air transportation of lithium metal batteries packed with or contained in equipment

Lithium metal batteries packed with or contained in equipment can be transported as cargo on passenger aircraft.

■For batteries packed with equipment, follow the requirements of UN3091 PI969.

Batteries are classified into either Section II or Section I depending on the lithium content/packaging requirements.

■For batteries contained in equipment, follow the requirements of UN3091 PI970.

Batteries are classified into either Section II or Section I depending on the lithium content/packaging requirements. The special handling may be unnecessary depending on the number of batteries and gross mass per package.

Maritime transportation of lithium metal batteries

Packaging requirements	Classification	Main requirements
Lithium content per cell ≤ 1 g Lithium content per battery ≤ 2 g	SP188	For transportation of batteries alone, the total weight of the package must be 30 kg or less. The package must pass a 1.2 m drop test, and the lithium battery mark (size: 100 × 100 mm) must be attached on the package. For transportation of batteries packed with or contained in equipment, the special handling may be unnecessary depending on the number of batteries per package.
Lithium content per cell > 1 g Lithium content per battery > 2 g	—	The package must comply with UN specification packaging requirements and be handled complying with Class 9 Dangerous Goods Regulations (e.g.: displaying the lithium battery hazard label).

Package at our shipment

When the packages containing the target batteries are shipped overseas directly from us, the lithium battery mark (Figure 1) is displayed on the packages.
If the packages are shipped domestically, the mark (Figure 1) is not displayed.
Thus, when customers transport the domestic-bound packages overseas, the lithium battery mark (Figure 1) must be displayed on the packages by customers. The responsibility for the cargo lies with the customers. Please contact a transportation company for details on the lithium battery mark (Figure 1).
For both domestic and overseas shipments, the target battery units which must be handled as Class 9 Dangerous Goods are packaged according to UN specification packaging requirements, and the packages bear the lithium battery hazard label (Figure 2).

Figure 1: Lithium battery mark example

* UN number(s)
** Telephone number for additional information

Figure 2: Lithium battery hazard label example

Transportation precaution for customers

For maritime or air transportation, the lithium battery mark (Figure 1) is required also for the outer package containing several packages of Mitsubishi Electric cells or batteries. When the content of a package must be handled as dangerous goods (Class 9), the package must comply with UN specification packaging requirements. Please issue Shipper's Declaration for Dangerous Goods and an Air Waybill (AWB) and attach the lithium battery hazard label (Figure 2) to the packages for transportation.
This section outlines the IATA Dangerous Goods Regulations 63rd Edition and the conditions of SP188 for non-dangerous goods transported by sea. The IATA Dangerous Goods Regulations are revised, and the requirements are changed annually. When customers transport lithium batteries by themselves, the responsibility for the cargo lies with the customers. Thus, be sure to check the latest version of the IATA Dangerous Goods Regulations and International Maritime Dangerous Goods Code (IMDG Code).

6.3 Symbol for EU

The contents of the regulations described in this section apply in countries within the EU.

EU Battery Regulation

To comply with the requirements of the EU Battery Regulation (REGULATION (EU) 2023/1542) newly enacted by the European Commission, which took effect on August 18, 2024, the batteries incorporated in the AC servo amplifier products are marked with the CE mark.

The symbol that is affixed to the battery inside the product is explained here.

Point

- This symbol is valid only in EU.

This symbol is specified in Article 13 "Labelling and marking of batteries" and Annex IV of the EU battery regulation (REGULATION(EU) 2023/1542).
MITSUBISHI ELECTRIC products are designed and manufactured with high quality materials and components which can be recycled and/or reused.
This symbol means that batteries and accumulators, at their end-of-life, should be disposed of separately from household waste.
If a chemical symbol is shown beneath the above symbol, a heavy metal of the corresponding c hemical symbol is contained in the battery or the accumulator with the following standard concentration or more.
This will be indicated as follows.
Hg: mercury (0.0005 %), Cd: cadmium (0.002 %), Pb: lead (0.004 %)
In the European Union, there are separate collection systems for used batteries and accumulators. Batteries and accumulators must be disposed of properly.
Help us to conserve the environment we live in.

6.4 Compliance with China Compulsory Certification (CCC)

Introduction

Some products are required to comply with China Compulsory Certification (hereinafter referred to as CCC) if exported, distributed, or sold to China. An outline of CCC is explained in this section. Mitsubishi Electric servo products are not subject to CCC.

CCC mark

Outline of CCC

CCC is a system for product certification that has been in effect in China since August 2003, the purpose of which is to protect consumers and ensure safety domestically in China. The certification system currently has five types of certification: safety, electromagnetic compatibility (EMC), safety + EMC, fire-fighting equipment, and wireless LAN. Products subject to the certification are allowed to be exported, distributed, or sold to China only if they are certified by this system.
Products that have received certification proving compliance with the relevant technical standards (or products declared by the manufacturer as being compliant) must carry the specified mark (CCC mark). Many of the technical standards to be applied are GB standards (Chinese national standards), which comply with global standards such as those set forth by the IEC (International Electrotechnical Commission) and CISPR (International Special Committee on Radio Interference).
As part of the State Administration for Market Supervision and Administration Announcement No. 36 of 2023 ("Administration for Market Supervision and Administration Announcement on the Description of the Catalogue of Compulsory Product Certification and Issue of the List of Products" (Thursday, August 10, 2023)), a revised list of products subject to CCC certification (2023 version) has been published. Simultaneously, the description of the catalogue of compulsory product certification and the list of products in Announcement No. 18 of 2020 (revised 2020) was repealed.

Judgment

16 product groups divided into 96 categories are specified as the subject products (announcement No. 36 of 2023). The following table shows the judgment rendered regarding the CCC compliance requirement for servo products.

Product	Judgment
AC servo amplifier	Not subject
AC servo motor *1	Not subject
Options *2	Not subject

*1 AC servo motors are included in the list of low-power motors (small motors 750 W or less) in the list of products subject to compulsory certification, but are not subject to certification requirements for the following reason.
Explosion proof motors and controlled motors (servo motors, stepping motors, etc.) are excluded from the subject small capacity motors.
*2 Mitsubishi Electric option cables use the wires that is not classified into the cable category in the catalog.

6.5 Compliance with the China RoHS directive

Outline

The China RoHS directive "电子信息产品污染控制管理办法 (Management Methods for Controlling Pollution by Electronic Information Products)" came into effect on March 1, 2007. The China RoHS directive was replaced by the following China RoHS directive "电器电子产品有害物质限制使用管理办法 (Management Methods for the Restriction of the Use of Hazardous Substances in Electrical and Electronic Products)". The succeeding China RoHS directive has been in effect since July 1, 2016.

The China RoHS directive restricts the following hazardous substances: 10 hazardous substances (lead, mercury, cadmium, hexavalent chromium, polybrominated biphenyls (PBB), and polybrominated diphenyl ethers (PBDE), bis phthalate (2-ethylhexyl) (DEHP), dibutyl phthalate (DBP), butyl benzyl phthalate (BBP), and diisobutyl phthalate (DIBP)) which are also restricted by the EU RoHS directive (2011/65/EU, (EU)2015/863), and other hazardous substances specified by the State (currently no applicable substances).

Status of our products for compliance with the China RoHS directive

The following table shows the logo types for the environmental protection use period, and whether the 10 hazardous substances are contained in our products or not.

Table of hazardous substances and their contents in the product												Logo for environmental protection use period *2
Part name		Hazardous substance (substance/threshold/standard) *1										
		Lead (Pb)	Mercury (Hg)	Cadmium (Cd)	Hexavalent chromium (Cr(VI))	PBB	PBDE	DEHP	DBP	BBP	DIBP	
		Threshold: cadmium: 0.01 wt% (100 ppm), other than cadmium: 0.1 wt% (1000 ppm)										
Drive unit	Mounting board	×	○	○	○	○	○	○	○	○	○	15
	Heat sink	×	○	○	○	○	○	○	○	○	○	
	Resin cabinet	○	○	○	○	○	○	○	○	○	○	
	Plate and screw	○	○	○	○	○	○	○	○	○	○	

*1 ○: This indicates that the levels of hazardous substances contained in all homogeneous materials of the component do not exceed the limits specified by the national standard for restricting the use of hazardous substances in electrical and electronic products.
×: This indicates that the levels of hazardous substances contained in at least one homogeneous material of the component exceed the limits specified by the national standard for restricting the use of hazardous substances in electrical and electronic products.

*2

Indicates that a certain hazardous substance is contained in the product manufactured or sold in China.
Follow safety and usage precautions for the product, and use the product within a limited number of years from the production date. Doing so prevents any hazardous substances in the product from causing environmental pollution or seriously affecting human health or property.

Difference between the China RoHS directive and the EU RoHS directive

The China RoHS directive allows no restriction exemption unlike the EU RoHS directive. Although a product complies with the EU RoHS directive, a hazardous substance in the product may be considered to be above the limit requirement (marked "×") in the China RoHS directive.

The following shows some restriction exemptions and their examples according to the EU RoHS directive.

- Lead as an alloying element in steel for machining purposes and in galvanized steel containing up to 0.35 % lead by weight, lead as an alloying element in aluminum containing up to 0.4 % lead by weight, and copper alloy containing up to 4 % lead by weight, e.g. brass-made insert nuts
- Lead in high melting temperature type solders (i.e. lead-based alloys containing 85 % by weight or more lead)
- Electrical and electronic components (such as piezoelectric sensors) containing lead in glass or ceramic materials, but not including the dielectric ceramics used in capacitors
- Electrical and electronic components containing lead in a glass or ceramic matrix compound, e.g. chip resistors

Status of our products for compliance with the China RoHS directive (Chinese)

The following table is given in Chinese in accordance with a request by the national standard related to the restriction of the use of hazardous substances in electrical and electronic products.

☞ Page 83 Status of our products for compliance with the China RoHS directive

产品中有害物质的名称及含有的信息表												环境保护使用期限标识 *2
部件名称		有害物质 (物质名称/阈值/基准) *1										
		铅 (Pb)	汞 (Hg)	镉 (Cd)	六价铬 (Cr(VI))	PBB	PBDE	DEHP	DBP	BBP	DIBP	
		阈值: 镉: 0.01wt% (100ppm)、镉以外: 0.1wt% (1000ppm)										
驱动器模块	电路板组件	×	○	○	○	○	○	○	○	○	○	15
	散热片	×	○	○	○	○	○	○	○	○	○	
	树脂壳体	○	○	○	○	○	○	○	○	○	○	
	金属板、螺丝	○	○	○	○	○	○	○	○	○	○	

*1 ○: 表示该有害物质在该部件所有均质材料中的含量均不超出电器电子产品有害物质限制使用国家标准要求。
×: 表示该有害物质至少在该部件的某一均质材料中的含量超出电器电子产品有害物质限制使用国家标准要求。

*2 15 在中国制造/销售的产品中含有特定有害物质的标志。
只要能遵守本产品在安全和使用方面的注意事项，从生产日算起的年限以内，不会对环境污染，人体，财产产生深刻的影响。

MEMO

REVISIONS

*The manual number is given on the bottom left of the back cover.

Revision date	*Manual number	Description
June 2021	IB(NA)-0300543ENG-A	First edition
July 2022	IB(NA)-0300543ENG-B	■Added/edited: Section 1.7, Chapter 4, Chapter 6, Section 6.1, Section 6.2, Section 6.4, Section 7.4, Section 7.6, Section 7.7, Section 7.8, Section 7.9, Section 7.10
January 2023	IB(NA)-0300543ENG-C	■The following function is added: Override function ■EU WEEE Directive is added. ■Added/edited: Section 2.2, Section 3.1, Section 3.2, Section 4.1, Section 4.5, Section 5.2, Section 6.3, Section 7.7, Section 7.9, Section 7.10
July 2023	IB(NA)-0300543ENG-D	■The following functions are added: FSoE, SS2, SOS, SLS, SSM, SDI, SLI ■Added/edited: Section 1.4, Section 2.1, Section 2.2, Section 6.3, Section 9.1, Section 9.2, Section 9.3, Section 9.4, Chapter 10
January 2024	IB(NA)-0300543ENG-E	■Edited: Section 1.1, Section 1.4, Section 5.2, Section 7.6, Section 7.7, Section 7.10, Section 9.3, Section 9.4
July 2024	IB(NA)-0300543ENG-F	■Added/edited: Section 1.4, Section 2.2, Chapter 3, Chapter 6, Section 6.4 ■Deleted: Chapter 7, Chapter 8, Chapter 9, Chapter 10
January 2025	IB(NA)-0300543ENG-G	■The following function is added: EtherNet/IP ■Added/edited: Section 1.1, Section 1.4, Section 2.1, Section 2.2, Section 3.1, Section 3.2, Chapter 4, Section 4.1
July 2025	IB(NA)-0300543ENG-H	■Special coating specification products are added. ■Added/edited: Section 1.2, Section 1.7, Section 6.2, Section 6.3
February 2026	IB(NA)-0300543ENG-J	■The following function is added: CIP Safety ■Edited: Section 1.1, Section 1.2, Section 1.4, Section 3.2, Section 4.5, Section 6.5
October 2026	IB(NA)-0300543ENG-K	■The following function is added: PROFINET ■Added/edited: Section 1.1, Section 1.2, Section 1.4, Section 2.2, Section 3.2, Section 4.1, Section 4.2

This manual confers no industrial property rights or any rights of any other kind, nor does it confer any patent licenses. Mitsubishi Electric Corporation cannot be held responsible for any problems involving industrial property rights which may occur as a result of using the contents noted in this manual.

© 2021 MITSUBISHI ELECTRIC CORPORATION

WARRANTY

Warranty

1. Warranty period and coverage

We will repair any failure or defect hereinafter referred to as "failure" in our FA equipment hereinafter referred to as the "Product" arisen during warranty period at no charge due to causes for which we are responsible through the distributor from which you purchased the Product or our service provider. However, we will charge the actual cost of dispatching our engineer for an on-site repair work on request by customer in Japan or overseas countries. We are not responsible for any on-site readjustment and/or trial run that may be required after a defective unit is repaired or replaced.

[Term]

For terms of warranty, please contact your original place of purchase.

[Limitations]

(1) You are requested to conduct an initial failure diagnosis by yourself, as a general rule.
It can also be carried out by us or our service company upon your request and the actual cost will be charged. However, it will not be charged if we are responsible for the cause of the failure.

(2) This limited warranty applies only when the condition, method, environment, etc. of use are in compliance with the terms and conditions and instructions that are set forth in the instruction manual and user manual for the Product and the caution label affixed to the Product.

(3) Even during the term of warranty, the repair cost will be charged on you in the following cases;

1. a failure caused by your improper storing or handling, carelessness or negligence, etc., and a failure caused by your hardware or software problem
2. a failure caused by any alteration, etc. to the Product made on your side without our approval
3. a failure which may be regarded as avoidable, if your equipment in which the Product is incorporated is equipped with a safety device required by applicable laws and has any function or structure considered to be indispensable according to a common sense in the industry
4. a failure which may be regarded as avoidable if consumable parts designated in the instruction manual, etc. are duly maintained and replaced
5. any replacement of consumable parts (battery, fan, smoothing capacitor, etc.)
6. a failure caused by external factors such as inevitable accidents, including without limitation fire and abnormal fluctuation of voltage, and acts of God, including without limitation earthquake, lightning and natural disasters
7. a failure generated by an unforeseeable cause with a scientific technology that was not available at the time of the shipment of the Product from our company
8. any other failures which we are not responsible for or which you acknowledge we are not responsible for

2. Term of warranty after the stop of production

(1) We may accept the repair at charge for another seven (7) years after the production of the product is discontinued. The announcement of the stop of production for each model can be seen in our Sales and Service, etc.

(2) Please note that the Product (including its spare parts) cannot be ordered after its stop of production.

3. Service in overseas countries

Our regional FA Center in overseas countries will accept the repair work of the Product. However, the terms and conditions of the repair work may differ depending on each FA Center. Please ask your local FA center for details.

4. Exclusion of loss in opportunity and secondary loss from warranty liability

Regardless of the gratis warranty term, Mitsubishi shall not be liable for compensation to:

(1) Damages caused by any cause found not to be the responsibility of Mitsubishi.

(2) Loss in opportunity, lost profits incurred to the user by Failures of Mitsubishi products.

(3) Special damages and secondary damages whether foreseeable or not, compensation for accidents, and compensation for damages to products other than Mitsubishi products.

(4) Replacement by the user, maintenance of on-site equipment, start-up test run and other tasks.

5. Change of Product specifications

Specifications listed in our catalogs, manuals or technical documents may be changed without notice.

6. Application and use of the Product

(1) For the use of our AC Servo, its applications should be those that may not result in a serious damage even if any failure or malfunction occurs in AC Servo, and a backup or fail-safe function should operate on an external system to AC Servo when any failure or malfunction occurs.

(2) Our AC Servo is designed and manufactured as a general purpose product for use at general industries.
Therefore, applications substantially influential on the public interest for such as atomic power plants and other power plants of electric power companies, and also which require a special quality assurance system, including applications for railway companies and government or public offices are not recommended, and we assume no responsibility for any failure caused by these applications when used.
In addition, applications which may be substantially influential to human lives or properties for such as airlines, medical treatments, railway service, incineration and fuel systems, man-operated material handling equipment, entertainment machines, safety machines, etc. are not recommended, and we assume no responsibility for any failure caused by these applications when used.
We will review the acceptability of the abovementioned applications, if you agree not to require a specific quality for a specific application. Please contact us for consultation.

(3) Mitsubishi Electric shall have no responsibility or liability for any problems involving programmable controller trouble and system trouble caused by DoS attacks, unauthorized access, computer viruses, and other cyberattacks.

TRADEMARKS

MELSERVO is a trademark or registered trademark of Mitsubishi Electric Corporation in Japan and/or other countries.
EtherCAT® and Safety over EtherCAT® are registered trademarks and patented technologies licensed by Beckhoff Automation GmbH, Germany.
ODVA, CIP™, EtherNet/IP™, and CIP Safety™ are registered trademarks of ODVA, Inc.
PROFINET is a trademark of PROFIBUS & PROFINET International.
All other product names and company names are trademarks or registered trademarks of their respective companies.

TRANSLATION OF THE ORIGINAL INSTRUCTIONS

IB(NA)-0300543ENG-K(2610)MEE
MODEL:
MODEL CODE:

MITSUBISHI ELECTRIC CORPORATION
HEAD OFFICE: TOKYO BLDG., 2-7-3, MARUNOUCHI, CHIYODA-KU, TOKYO 100-8310, JAPAN
NAGOYA WORKS: 1-14, YADA-MINAMI 5-CHOME, HIGASHI-KU, NAGOYA 461-8670, JAPAN

When exported from Japan, this manual does not require application to the Ministry of Economy, Trade and Industry for service transaction permission.

Specifications subject to change without notice.
Compliance with the indicated global standards and regulations is current as of the release date of this manual.