MITSUBISHI ELECTRIC

AC Servo System

MITSUBISHI ELECTRIC SERVO SYSTEM
MELSERVO-JET

MR-JET-G-N1
User's Manual
(Communication Function)

-MR-JET-_G_-_N1

SAFETY INSTRUCTIONS

Please read the instructions carefully before using the equipment.
To use the equipment correctly, do not attempt to install, operate, maintain, or inspect the equipment until you have read through this manual, installation guide, and appended documents carefully. Do not use the equipment until you have a full knowledge of the equipment, safety information and instructions.
In this manual, the safety instruction levels are classified into "WARNING" and "CAUTION".

⚠ **WARNING**	Indicates that incorrect handling may cause hazardous conditions, resulting in death or severe injury.
⚠ **CAUTION**	Indicates that incorrect handling may cause hazardous conditions, resulting in medium or slight injury.

Note that the CAUTION level may lead to a serious consequence depending on conditions.
Please follow the instructions of both levels because they are important to personnel safety.
Forbidden actions and required actions are indicated by the following diagrammatic symbols.

	Indicates a forbidden action. For example, "No Fire" is indicated by .
	Indicates a required action. For example, grounding is indicated by .

In this manual, precautions for hazards that can lead to property damage, instructions for other functions, and other information are shown separately in the "Point" area.
After reading this manual, keep it accessible to the operator.

[Installation/wiring]

⚠WARNING

- To prevent an electric shock, turn off the power and wait for 15 minutes or more before starting wiring and/or inspection.
- To prevent an electric shock, ground the servo amplifier.
- To prevent an electric shock, any person who is involved in wiring should be fully competent to do the work.
- To prevent an electric shock, mount the servo amplifier before wiring.
- To prevent an electric shock, connect the protective earth (PE) terminal of the servo amplifier to the protective earth (PE) of the cabinet, then connect the grounding lead wire to the ground.
- To prevent an electric shock, do not touch the conductive parts.

[Setting/adjustment]

⚠WARNING

- To prevent an electric shock, do not operate the switches with wet hands.

[Operation]

⚠WARNING

- To prevent an electric shock, do not operate the switches with wet hands.

[Maintenance]

⚠WARNING

- To prevent an electric shock, any person who is involved in inspection should be fully competent to do the work.
- To prevent an electric shock, do not operate the switches with wet hands.

ABOUT THE MANUAL

If you are using the servo for the first time, prepare and refer to the related manuals as necessary to ensure safe operation of the servo. For the related manuals, refer to the User's Manual (Introduction).

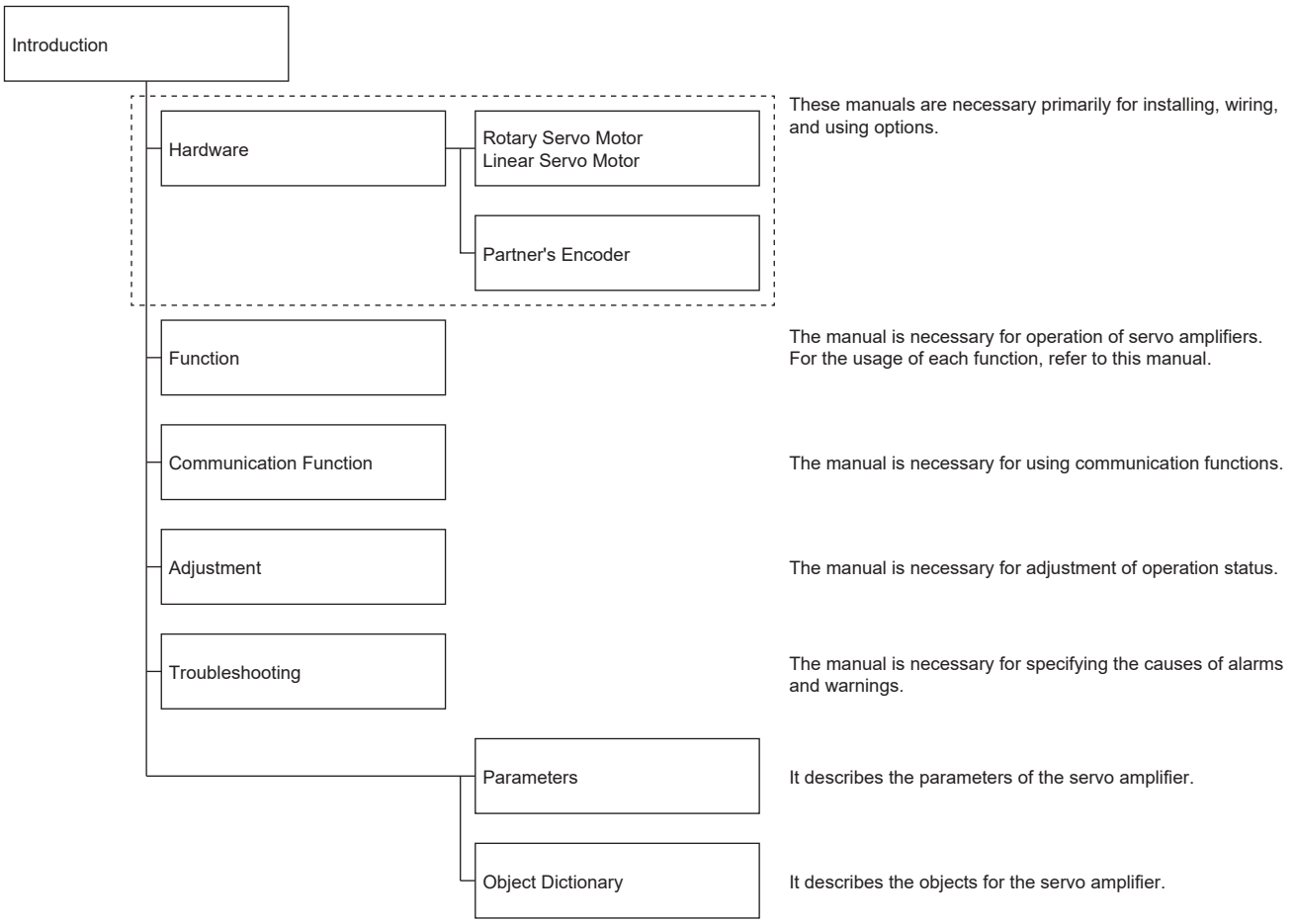

Global standards and regulations

Compliance with the indicated global standards and regulations is current as of the release date of this manual. Some standards and regulations may have been modified or withdrawn.

Network and function availability

For information on available networks (EtherCAT and PROFINET) and servo amplifier functions, refer to "FUNCTION" in the User's Manual (Introduction).

OBJECT UNITS

This section explains the pos units, vel units, and acc units used in this manual.
The degree unit is available on servo amplifiers with firmware version B6 or later.
The mm unit and inch unit are available on servo amplifiers with firmware version B8 or later in the positioning mode (point table method).

pos units

The standard unit can be changed using [Pr. PT01.2 Unit for position data] as shown in the following table.

Setting value	Standard unit
0	mm
1	inch
2	degree
3	pulse

vel units

The speed unit can be changed using [Pr. PT01.1 Speed/acceleration/deceleration unit selection] as shown in the following table. The command unit can be changed to "0.001 mm", "0.0001 inch", "0.001 degree", or "pulse" using [Pr. PT01.2].

Setting value	Unit
0	0.01 r/min, 0.01 mm/s *1
1	Command unit/s

*1 0.01 mm/s is used in the linear servo motor control mode.

acc units

The acceleration unit can be changed using [Pr. PT01.1] as shown in the following table. The command unit can be changed to "0.001 mm", "0.0001 inch", "0.001 degree", or "pulse" using [Pr. PT01.2].

Setting value	Unit
0	ms
1	Command unit/s^2

U.S. CUSTOMARY UNITS

U.S. customary units are not shown in this manual. Convert the values if necessary according to the following table.

Quantity	SI (metric) unit	U.S. customary unit
Mass	1 [kg]	2.2046 [lb]
Length	1 [mm]	0.03937 [inch]
Torque	1 [N•m]	141.6 [oz•inch]
Moment of inertia	1 [(× 10^{-4} kg•m^2)]	5.4675 [oz•$inch^2$]
Load (thrust load/axial load)	1 [N]	0.2248 [lbf]
Temperature	N [°C] × 9/5 + 32	N [°F]

CONTENTS

SAFETY INSTRUCTIONS. 1
ABOUT THE MANUAL 3
OBJECT UNITS. 4
U.S. CUSTOMARY UNITS 4

PART 1 EtherCAT

CHAPTER 1 FUNCTIONS AND CONFIGURATION 10

1.1 Outline 10
CiA 402 drive profile 10
Control mode 11
1.2 Function list 12
1.3 Engineering software 12
Engineering software list 12
Connection via a controller 13

CHAPTER 2 EtherCAT COMMUNICATION 14

2.1 Communication specifications 14
2.2 EtherCAT State Machine (ESM) 15
Communication state. 15
EtherCAT state 16

CHAPTER 3 OBJECT DICTIONARY (OD) 17

3.1 Section definition of object dictionary 17
3.2 Saving object dictionary data. 19
Store parameters. 19
Restore default parameters 19

CHAPTER 4 PDO (Process Data Object) COMMUNICATION 20

4.1 PDO communication cycle 20
4.2 PDO setting-related objects 20
4.3 PDO default mapping 21
RxPDO default mapping 21
TxPDO default mapping 23
4.4 Variable PDO mapping 24
4.5 Objects that require mapping. 26
RxPDO 26
TxPDO. 26

CHAPTER 5 SDO (Service Data Object) COMMUNICATION 27

5.1 SDO communication-related services. 27
5.2 SDO Abort Code 28

CHAPTER 6 SYNCHRONIZATION 29

6.1 Availability of synchronous mode in control mode 29
6.2 Synchronous mode (DC mode) 29
6.3 Asynchronous mode (Free-run mode) 30

CHAPTER 7 CiA 402 DRIVE PROFILE 31
7.1 PDS state transitions 31
7.2 Controlword/Control DI 33
Bit definition of Controlword 33
Bit definition of Control DI 34
7.3 Statusword/Status DO 39
Bit definition of Statusword 40
Bit definition of Status DO 41
7.4 Control mode 46
Selecting control mode (Modes of operation) 46
Control switching 47

CHAPTER 8 STARTUP 49
8.1 Absolute position detection system configuration 49
Outline 49
Precautions and restrictions 49
Startup procedure 50
8.2 Connecting Ethernet cables 51
8.3 Example set-up procedure 52
Controller settings 52
Establishing the communication 54
Operating the servo motor 54
Disconnecting the network 55

CHAPTER 9 MANUFACTURER-SPECIFIC FUNCTION 56
9.1 Torque limit selection 56
Torque limit 56
9.2 Infinite feed function 57
Outline 57
Setting method 57
When the servo motor rotates 32768 rev or more 57
Restrictions 58

CHAPTER 10 FSoE 59
10.1 Safety communication function 59
Safety PDO mapping 59
Safety parameter set 60
Startup 60
I/O function 62

PART 2 PROFINET

CHAPTER 11 FUNCTIONS AND CONFIGURATION 68
11.1 Outline 68
Applicable controllers 68
11.2 Function list 69
11.3 Communication specifications 69
11.4 Engineering software 70
Engineering software list 70

CHAPTER 12 STARTUP 73

12.1 Controller setting. 73
Establishing the communication 75
Operating the servo motor. 76
Network disconnection procedure 78
12.2 Ethernet cable connection 78

CHAPTER 13 PROFINET communication 79

13.1 Cyclic communication 79
Supported telegram. 79
Telegram mapping. 80
Variable mapping. 81
13.2 Acyclic communication 85
PROFIdrive Parameter Access 85
Reset To Factory 88
PROFINET Alarm 88

CHAPTER 14 PROFIdrive PROFILE 89

14.1 Outline 89
14.2 State transition 90
General State Diagram 90
14.3 Control word 91
control word 1 91
14.4 Status word 92
Status word 1. 92
14.5 Operating mode. 92
14.6 PROFIdrive Speed Control Mode. 93
Standard Telegram 1 93
14.7 Manufacturer-specific Control Mode. 97
Telegram 200. 97
Telegram 202. 97
Telegram 203. 97

CHAPTER 15 CiA 402 DRIVE PROFILE 98

15.1 Outline 98
15.2 PDS state transition 99
Correspondence between the command bit setting and the PDS state 101
15.3 Controlword/Control DI. 102
Bit definition of Controlword. 102
Bit definition of Control DI 103
15.4 Statusword/Status DO. 108
Bit definition of Statusword 108
Bit definition of Status DO 110
15.5 Control mode. 115
Selectinga control mode (Modes of operation) 115
Control switching. 115

CHAPTER 16 PROFIdrive Parameter 116

16.1 List of PROFIdrive standard parameters. 116
16.2 Details of PROFIdrive standard parameters 117

[Telegram selection (PNU922)] . . . 117
[Operating mode (PNU930)] . . . 117
[Fault message counter (PNU944)] . . . 117
[Fault number (PNU947)] . . . 117
[Drive Unit identification data block (PNU964)] . . . 118
[Profile identification number (PNU965)] . . . 118
[DO identification (PNU975)] . . . 118
[Number list of defined parameters (PNU980)] . . . 119
[Velocity reference value (PNU60000)] . . . 119
16.3 List of PROFIdrive manufacture parameters . . . 120
16.4 Details of PROFIdrive manufacture parameters . . . 121
[Control word 1 (PNU1051)] . . . 121
[Status word 1 (PNU1052)] . . . 121
[Speed setpoint A (PNU1055)] . . . 121
[Speed actual value A (PNU1056)] . . . 121
[f or n Reached Or Exceeded level (PNU2051)] . . . 121
[f or n Reached Or Exceeded time (PNU2052)] . . . 121
[Speed Error Within Tolerance Range value (PNU2058)] . . . 122
[Speed Error Within Tolerance Range hysteresis (PNU2059)] . . . 122
[Speed Error Within Tolerance Range time (PNU2060)] . . . 122
16.5 Object dictionary (OD) . . . 122
16.6 Saving PROFIdrive parameters . . . 123
Store parameters . . . 123
REVISIONS . . . 124
WARRANTY . . . 125
TRADEMARKS . . . 126

PART 1 EtherCAT

1 FUNCTIONS AND CONFIGURATION

2 EtherCAT COMMUNICATION

3 OBJECT DICTIONARY (OD)

4 PDO (Process Data Object) COMMUNICATION

5 SDO (Service Data Object) COMMUNICATION

6 SYNCHRONIZATION

7 CiA 402 DRIVE PROFILE

8 STARTUP

9 MANUFACTURER-SPECIFIC FUNCTION

10 FSoE

1 FUNCTIONS AND CONFIGURATION

1.1 Outline

EtherCAT is an abbreviation of Ethernet for Control Automation Technology. It is open network communication between a master station and slave stations via real-time Ethernet developed by Beckhoff Automation. ETG (EtherCAT Technology Group) manages EtherCAT.
The servo amplifiers operate as slave stations which support the CAN application protocol over EtherCAT (CoE). The device type corresponds to a power drive system, and supports the CiA 402 drive profile.

CiA 402 drive profile

The servo amplifiers operate as slave stations which support the CAN application protocol over EtherCAT (CoE). The device type corresponds to a power drive system, and supports the CiA 402 drive profile.

Control mode

The servo amplifier supports the following control modes.

Control mode	Symbol	Description
Cyclic synchronous position mode	csp	This is a control mode to drive servo motors by receiving a position command cyclically via either synchronous or asynchronous communication with a controller. Use an absolute position address for the command.
Cyclic synchronous velocity mode	csv	This is a control mode to drive servo motors by receiving a speed command cyclically via either synchronous or asynchronous communication with a controller.
Cyclic synchronous torque mode	cst	This is a control mode to drive servo motors by receiving a torque command cyclically via either synchronous or asynchronous communication with a controller.
Profile position mode	pp	This is a position control mode where an end position command is received to drive the servo motor in either the synchronous or asynchronous communication with a controller. Use an absolute position address or a relative position address for the command.
Profile velocity mode	pv	This is a control mode to drive servo motors by receiving a target speed command via either synchronous or asynchronous communication with a controller.
Profile torque mode	tq	This is a control mode to drive servo motors by receiving a target torque command via either synchronous or asynchronous communication with a controller.
Point table mode	pt	This is a control mode to drive servo motors according to commands such as travel distance and speed which are stored in the point table number specified via either synchronous or asynchronous communication with a controller. This control mode is not in CiA 402 standard (Mitsubishi Electric original).
JOG operation mode	jg	This is a control mode where the servo motor speed is set to drive the servo motor manually via either synchronous or asynchronous communication with a controller. This control mode is not in CiA 402 standard (Mitsubishi Electric original).
Homing mode	hm	This is a control mode to perform homing with the method specified by the controller.

Compliance with standards

The servo amplifiers comply with the standards shown below. For the descriptions which are not in this manual, refer to the following standards.

Standards	Version
ETG.1000.2 EtherCAT Specification - Part2 Physical Layer service definition and protocol specification	V1.0.4
ETG.1000.3 EtherCAT Specification - Part3 Data Link Layer service definition	V1.0.4
ETG.1000.4 EtherCAT Specification - Part4 Data Link Layer protocol specification	V1.0.4
ETG.1000.5 EtherCAT Specification - Part5 Application Layer service definition	V1.0.4
ETG.1000.6 EtherCAT Specification - Part6 Application Layer protocol specification	V1.0.4
ETG.1020 EtherCAT Protocol Enhancements	V1.2.0
ETG.1300 EtherCAT Indicator and Labeling Specification	V1.1.1
ETG.2000 EtherCAT Slave Information (ESI) Specification	V1.0.10
ETG.6010 Implementation Directive for CiA 402 Drive Profile	V1.1.0
ETG.5003.1 Semiconductor Device Profile - part1 CommonDeviceProfile*1	V1.1.0
ETG.5003.2 Semiconductor Device Profile - part2 Firmware Update	V1.0.1
ETG.5001.4 EtherCAT Modular Device Profile - part4 Safety Modules Specification	V1.1.0
ETG.5100 Safety over EtherCAT Protocol Specification	V1.2.0
IEC 61800-7-201 Adjustable speed electrical power drive systems – Part 7-201: Generic interface and use of profiles for power drive systems – Profile type 1 specification	Edition 2.0
Adjustable speed electrical power drive systems – Part 7-301: Generic interface and use of profiles for power drive systems – Mapping of profile type 1 to network technologies	Edition 2.0

*1 It complies with the items in CDP (CommonDeviceProfile) in the standards for servo amplifiers with firmware version D4 or later.

1.2 Function list

This list explains the EtherCAT related functions for devices and the whole system.

Category	Subcategory	Function	Description	Detailed explanation
Network	Open network	EtherCAT protocol	This protocol supports EtherCAT.	☞ Page 14 Communication specifications
		EtherCAT communication setting	This setting specifies the control mode and network communication.	☞ Page 49 STARTUP
	Remote maintenance	File access over EtherCAT (FoE)	This function allows devices to update their firmware via a network. For details, contact your local sales office.	—
		Ethernet over EtherCAT (EoE)	This protocol transmits the Ethernet communication data via the EtherCAT segment.	☞ Page 13 Connection via a controller
	Profile	ESI	This is a setting file on which the information specific to each slave station (vendor information, product information, profiles, objects, and other information) is written. Store the ESI file on the controller to use it.	—
Application function	Functional safety	Safety communication function (FSoE)	Connecting the servo amplifier to a controller compliant with functional safety enables the use of safety sub-functions.	☞ Page 59 FSoE
	Synchronization	Distributed clock (DC)	This function enables DC mode.	☞ Page 29 SYNCHRONIZATION

1.3 Engineering software

The following explains the main purposes of the engineering software used in communication. For specific usages, refer to the manuals of the engineering software and controller.

Engineering software list

This list shows engineering software to be used.

Engineering software	Detailed explanation
MR Configurator2	This is a software that has the following functions: servo amplifier adjustment, monitor display, diagnosis, reading/writing of servo parameters, and test operation. These functions are performed using a personal computer. Parameter settings and test operation can also be performed via a controller. Settings, such as a stroke limit, absolute position detection system, communication error detection time, are made with this software.

Connection via a controller

Connection via a controller is available on servo amplifiers with firmware version C4 or later being used with MR Configurator2 with software version 1.134Q or later.

The Ethernet over EtherCAT (EoE) function of EtherCAT network allows the engineering software to be connected with the servo amplifier via a controller.

A controller that supports the EoE function (EtherCAT master) is required.

For the usage of the EoE function, refer to the manual for the controller being used.

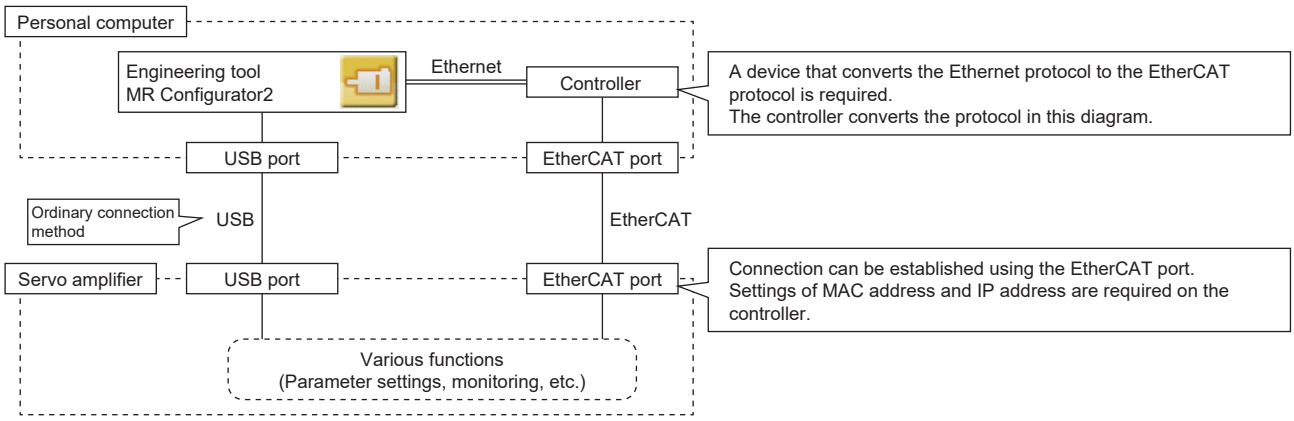

2 EtherCAT COMMUNICATION

2.1 Communication specifications

The communication specifications are shown in the following table.

Item		Description	Remark
EtherCAT communication specifications		IEC 61158 Type12 CAN application protocol over EtherCAT (CoE), IEC 61800-7 CiA 402 Drive Profile	—
Physical layer		100BASE-TX (IEEE802.3)	—
Communication connector		Two RJ45 ports (IN port and OUT port)	—
Communication cable	Cable type	Category 5e or higher, (double shielded/STP) straight cable	—
	Standard	One of the following standards must be met. • IEEE802.3 100BASE-TX • ANSI/TIA/EIA-568-B (Category 5e)	
	Connector	RJ-45 shielded connector	
Network topology		Line, Tree, Star, or Hybrid of these three topology types	—
Communication speed		100 Mbps (Full duplex)	—
Transmission distance between stations		Max. 100 m	—
Number of connection nodes		Max. 65535	The number of connection nodes for actual use varies depending on the specifications of the master controller.
SDO (Mailbox) communication		Asynchronous communication Sending/Receiving: 1 channel each	Maximum data size in sending/receiving: 1486 bytes per channel
PDO (Process Data) communication *1		Cycle time: Select from 0.125 ms, 0.25 ms, 0.5 ms, 1 ms, 2 ms, 4 ms, or 8 ms. Receive PDO (RxPDO): 1 channel Send PDO (TxPDO): 1 channel	—
PDO mapping		The servo amplifiers support variable PDO mapping.	Maximum size of RxPDO and TxPDO: 64 bytes each Maximum number of object mapping: 32 each Maximum number of object mapping (safety PDO when the safety communication function is used): 36 each
Distributed clock (DC)		DC mode or Free-run mode can be selected.	Sync0: Set for the same cycle time as the PDO communication cycle Sync1: Not used
Explicit Device Identification		Supported	—
LED display		RUN, ERROR, LINK/Activity (IN, OUT)	—

*1 There are restrictions on the communication cycle depending on the function used. For details, refer to "Restrictions on the MR-JET-_G_" in the following manual.
MR-JET-G-N1 User's Manual (Introduction)

2.2 EtherCAT State Machine (ESM)

The communication states of the MR-JET-_G-N1 servo amplifier are classified and managed by EtherCAT State Machine (ESM) which is defined in the EtherCAT standard.

Communication state

Communication states are classified as shown in the table below. There are two types of communication: PDO communication (process data object) in which command data and feedback data are transmitted and received cyclically, and SDO communication (service data object) in which object data is transmitted and received asynchronously.

☞ Page 20 PDO (Process Data Object) COMMUNICATION
☞ Page 27 SDO (Service Data Object) COMMUNICATION

ESM state	Description
Init	The ESM state after turning on the power is the Init state. No SDO communication or PDO communication is possible. The master station accesses the DL-Information registers and initializes the communication.
Pre-Operational	SDO communication is possible. PDO communication is not possible. Initial network settings are configured and the initial transfer of parameters are made in this state.
Safe-Operational	SDO communication is possible. PDO communication is also possible, although all the operations (commands) such as driving servo motors are disabled. When the DC mode is selected, synchronization is established in this state.
Operational	Both the SDO communication and the PDO communication are possible. Commanding via PDO communication is enabled, and servo motors can be driven.
Bootstrap	Mailbox communication via the FoE protocol is possible. This is a state in which the firmware is updated via EtherCAT. (For manufacturer setting)

EtherCAT state

The servo amplifier can be operated once the state transitions from the Init state through the Pre-Operational and Safe-Operational state to the Operational state. When the Operational state transitions to other states, initialization of the servo amplifier is executed to clear internal statuses.

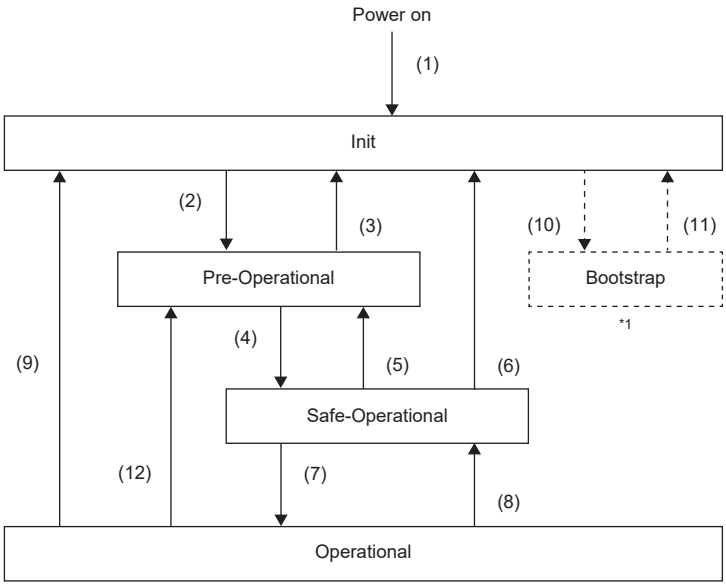

*1 This state is for manufacturer's settings.

Transition No.	Description
(1)	Power-on
(2)	SDO communication configuration • The master station sets Sync Manager channels for SDO communication and DL Address registers of the slave station. • The master station requests the slave station to transition to the Pre-Operational state. • The state transitions to the Pre-Operational state.
(4)	PDO communication configuration • The master station sets configuration parameters (such as PDO mapping) using SDO communication. • The master station sets Sync Manager channels for PDO communication and FMMU channels of the slave station. FMMU (Fieldbus Memory Management Unit) is a mechanism to manage the relationship between the global address space and the local address space in EtherCAT communication. The global address space is used for PDO communication, and the local address space in each slave station stores object data. • The master station requests the slave station to transition to the Safe-Operational state. • The state transitions to the Safe-Operational state.
(7)	Synchronization • The master station and the slave station synchronize with each other by using Distributed Clocks. • The master station starts to output a valid command value. • The master station requests the slave station to transition to the Operational state. • The state transitions to the Operational state.
(5), (12)	When the master station requests the slave station to transition to the Pre-Operational state, the state transitions to the Pre-Operational state.
(8)	When the master station requests the slave station to transition to the Safe-Operational state, the state transitions to the Safe-Operational state.
(3), (6), (9), (11)	In the following case, the state transitions to the Init state. When the master station requests the slave station to transition to the Init state.
(10)	When the master station requests the slave station to transition to the Bootstrap state, the state transitions to the Bootstrap state.

3 OBJECT DICTIONARY (OD)

Point

For details of the object dictionary, refer to the following manual.
MR-JET-G-N1 User's Manual (Object Dictionary)

The data that a CAN application protocol over EtherCAT (CoE) device holds, such as control parameters, command values, and feedback values, is handled as an object composed of an Index value, object name, object type, R/W attribute, and other elements. The data is exchanged between the master and slave devices. The aggregate of these objects is called an object dictionary (OD).

3.1 Section definition of object dictionary

With the CoE protocol (CAN application protocol over EtherCAT), objects of an object dictionary are categorized by Index depending on the descriptions as shown in the following table.
The objects of the Semiconductor device profile (Index F000h to F0FFh) are available on servo amplifiers with firmware version D4 or later.

Index	Description
1000h to 1FFFh	Communication profile
2000h to 4FFFh	Object group defined by Mitsubishi Electric
6000h to 77FFh	CiA 402 drive profile
F000h to F0FFh	Semiconductor device profile

The following shows the section definition of object dictionary when the safety communication function is used.
The following definitions are added to the section definition (CAN application protocol over EtherCAT (CoE)).
Indexes F000h to FFFFh change to the objects of the FSoE device profile when the safety communication function is used.
They can only have either of the FSoE device profile definition and the Semiconductor device profile definition.

Index	Description
1608h 1A08h	Communication profile
E600h E700h E900h to E9FFh F601h to F60Fh F700h to F70Fh	FSoE CiA 402 drive profile
F000h to FFFFh	Modular device profile

All objects of an object dictionary follow the definitions specified in the standards. The correspondence between indexes and the object contents is shown in the following table. Refer to the Reference column for the details of each object.

Index	Description	Reference
0000h to 0FFFh	Data type area	—
1000h to 1FFFh	CoE communication area	☞ Page 20 PDO (Process Data Object) COMMUNICATION ☞ Page 27 SDO (Service Data Object) COMMUNICATION MR-JET-G-N1 User's Manual (Object Dictionary)
2000h to 25FFh	Servo parameter area (manufacturer specific)	MR-JET-G-N1 User's Manual (Object Dictionary)
2A00h to 2FFFh	Servo control command/monitor area (manufacturer specific)	
6000h to 67FFh	CiA 402 drive profile area	
F000h to F0FFh	Semiconductor device profile area	

The correspondence between indexes and the object contents when the safety communication function is used is shown in the following table. The following definition is added. Indexes F000h to FFFFh change to the objects of the FSoE device profile when the safety communication function is used. They can only have either of the FSoE device profile definition and the Semiconductor device profile definition. Refer to the Reference column for the details of each object.

Index	Description	Reference
1608h 1A08h	CoE communication area	☞ Page 20 PDO (Process Data Object) COMMUNICATION ☞ Page 27 SDO (Service Data Object) COMMUNICATION 📖MR-JET-G-N1 User's Manual (Object Dictionary)
E600h	FSoE CiA 402 drive profile area (FSoE Input area)	📖MR-JET-G-N1 User's Manual (Object Dictionary)
E700h	FSoE CiA 402 drive profile area (FSoE Output area)	
E900h to E90Fh	FSoE CiA 402 drive profile area (FSoE Information area)	
F601h to F60Fh	FSoE the CiA 402 drive profile area (FSoE Input area)	
F701h to F70Fh	FSoE CiA 402 drive profile area (FSoE Output area)	
F000h to FFFFh	Modular device profile area	

3.2 Saving object dictionary data

Some of object dictionary data is stored in a non-volatile memory and some is not. Use [Store parameters (Obj. 1010h)] for storing the object dictionary data in the non-volatile memory.
For details about objects that can be stored in the non-volatile memory, refer to the following manual.
📖MR-JET-G-N1 User's Manual (Object Dictionary)

Store parameters

Writing "65766173h" (= "save" in reverse ASCII byte order) to [Save all parameters (PNU4112: 1)] saves the PROFIdrive parameter settings to the non-volatile memory of the servo amplifier.
It may take approximately 25 s for [Save all parameters (Obj. 1010h: 01h)] to save all parameters. Do not turn off the power supply during writing.

Index	Sub	Object	Name	Data Type	Access	Description
1010h	0	ARRAY	Store parameters	U8	ro	Number of entries
	1		Save all parameters	U32	rw	Saves all parameters.

Reading [Save all parameters (Obj. 1010h: 01h)] will produce the following values. Bit 0 is "0" during saving and "1" when not saving.

Bit	Description
0	0: Objects cannot be saved by the command (save operation in progress) 1: Objects can be saved by the command (save operation not in progress)
1	0: Not automatically saved

Precautions

To turn off the power supply after executing Store parameters, make sure that the save operation is not in progress (bit 0 is 1), and then turn off the power supply.

Restore default parameters

Objects can be reset to the factory setting.
To initialize objects, write "64616F6Ch" (= reverse order of the ASCII code "load") to [Restore all default parameters (Obj. 1011h: 01h)], then cycle the power. Writing a value other than "load" (= 64616F6Ch) triggers an error. Initialization can take up to around 25 s.

Index	Sub	Object	Name	Data Type	Access	Description
1011h	0	ARRAY	Restore default parameters	U8	ro	Number of entries
	1		Restore all default parameters	U32	rw	All parameter initialization

Reading [Restore all default parameters (Obj. 1011h: 01h)] will display "00000001h" (command valid).

4 PDO (Process Data Object) COMMUNICATION

In PDO (Process Data Object) communication, command data and feedback data can be transmitted and received cyclically between a master station (controller) and a slave station (servo amplifier). PDOs are distinguished into RxPDOs and TxPDOs. An RxPDO is used when the slave station receives command data from the controller, and a TxPDO is used when the slave station transmits status data to the controller with TxPDOs.

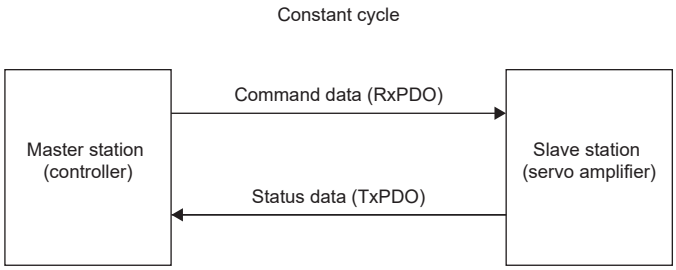

The variable PDO mapping function enables PDO communication to transmit and receive multiple PDOs in any array at a time.

4.1 PDO communication cycle

RxPDO communication and TxPDO communication are performed at the same cycle on the servo amplifier.
To change the communication cycle time, rewrite [Cycle Time (Obj. 1C32h: 02h)] with SDO download in the Pre-Operational state via a network.

4.2 PDO setting-related objects

Objects related to PDO settings are shown in the following table.

Index	Sub	Object	Name	Data Type	Access	Description
1C32h	0	RECORD	SM output parameter	U8	ro	MR-JET-G-N1 User's Manual (Object Dictionary)
	1		Synchronization Type	U16	rw	
	2		Cycle time	U32	rw	
	4		Synchronization types supported	U16	ro	
	5		Minimum cycle time	U32	ro	
	6		Calc and copy time	U32	ro	
	9		Delay time	U32	ro	
	11		SM-Event Missed	U16	ro	
	12		Cycle time too small	U16	ro	
	13		Shift Time Too Short	U16	ro	
	32		Sync Error	BOOL	ro	
1C33h	0	RECORD	SM input parameter	U8	ro	
	1		Synchronization type	U16	rw	
	2		Cycle time	U32	rw	
	4		Synchronization types supported	U16	ro	
	5		Minimum cycle time	U32	ro	
	6		Calc and copy time	U32	ro	
	9		Delay time	U32	ro	
	11		SM-Event Missed	U16	ro	
	12		Cycle time too small	U16	ro	
	13		Shift Time Too Short	U16	ro	
	32		Sync Error	BOOL	ro	

4.3 PDO default mapping

Point

The servo amplifier supports the variable PDO mapping function, which can select objects transmitted and received in PDO communication. For changing the PDO mapping, refer to the following.

☞ Page 24 Variable PDO mapping

RxPDO default mapping

With the RxPDO default mapping, a master station (controller) transmits command data to a slave station (servo amplifier) using an RxPDO in the array shown in the following table.

Map No.	Initial mapping settings	Applications expected to be used for initial mapping
1st RxPDO map (1600h)	Modes of operation (Obj. 6060h) Padding (1 byte) Controlword (Obj. 6040h) Control DI 1 (Obj. 2D01h) Control DI 2 (Obj. 2D02h) Control DI 3 (Obj. 2D03h) Target position (Obj. 607Ah) Target velocity (Obj. 60FFh) Velocity limit value (Obj. 2D20h) Target torque (Obj. 6071h)	Cyclic synchronous position mode (csp) Cyclic synchronous velocity mode (csv) Cyclic synchronous torque mode (cst) Homing mode (hm) This initial mapping is for an application in which the modes above are switched and used. The following function can be used together. • Speed limit function (in cst) Map size: 24 bytes
2nd RxPDO map (1601h)	Modes of operation (Obj. 6060h) Padding (1 byte) Controlword (Obj. 6040h) Control DI 1 (Obj. 2D01h) Control DI 2 (Obj. 2D02h) Control DI 3 (Obj. 2D03h) Target position (Obj. 607Ah) Target velocity (Obj. 60FFh) Velocity limit value (Obj. 2D20h) Target torque (Obj. 6071h) Profile velocity (Obj. 6081h) Profile acceleration (Obj. 6083h) Profile deceleration (Obj. 6084h) Torque slope (Obj. 6087h)	Profile position mode (pp) Profile velocity mode (pv) Profile torque mode (tq) Homing mode (hm) This initial mapping is for an application in which the modes above are switched and used. The following function can be used together. • Speed limit function (in tq) Map size: 42 bytes
3rd RxPDO map (1602h)	Modes of operation (Obj. 6060h) Padding (1 byte) Controlword (Obj. 6040h) Control DI 1 (Obj. 2D01h) Control DI 2 (Obj. 2D02h) Control DI 3 (Obj. 2D03h) Target point table (Obj. 2D60h) Profile velocity (Obj. 6081h) Profile acceleration (Obj. 6083h) Profile deceleration (Obj. 6084h)	Point table mode (pt) JOG operation mode (jg) Homing mode (hm) This initial mapping is for an application in which the modes above are switched and used. Map size: 24 bytes
4th RxPDO map (1603h)	Unassigned	—

Map No.	Initial mapping settings	Applications expected to be used for initial mapping
9th RxPDO map (1608h)	FSoE Master Command (Obj. E700h: 01h) STO Command (Obj. F701h: 01h) SS1 Command (Obj. F701h: 02h) Padding (2 bit) SDIP Command (Obj. F701h: 04h) SDIN Command (Obj. F701h: 05h) Error Ack (Obj. F701h: 06h) SLS1 Command (Obj. F701h: 07h) SLS2 Command (Obj. F701h: 08h) SLS3 Command (Obj. F701h: 09h) SLS4 Command (Obj. F701h: 0Ah) SLT1 Command (Obj. F701h: 0Ch) SLT2 Command (Obj. F701h: 0Dh) SLT3 Command (Obj. F701h: 0Eh) FSoE Master CRC_0 (Obj. E700h: 03h) SLT4 Command (Obj. F701h: 0Fh) Padding (15 bit) FSoE Master CRC_1 (Obj. E700h: 04h) FSoE Master ConnectionID (Obj. E700h: 02h)	This initial mapping is for an application in which the safety communication function is used. Map size: 11 bytes

TxPDO default mapping

With the TxPDO default mapping, status data is transmitted to a master station (controller) using a TxPDO in the array shown in the following table.

Map No.	Initial mapping settings	Applications expected to be used for initial mapping
1st TxPDO map (1A00h)	Modes of operation display (Obj. 6061h) Padding (1 byte) Statusword (Obj. 6041h) Status DO 1 (Obj. 2D11h) Status DO 2 (Obj. 2D12h) Status DO 3 (Obj. 2D13h) Position actual value (Obj. 6064h) Velocity actual value (Obj. 606Ch) Following error actual value (Obj. 60F4h) Torque actual value (Obj. 6077h)	Cyclic synchronous position mode (csp) Cyclic synchronous velocity mode (csv) Cyclic synchronous torque mode (cst) Homing mode (hm) This initial mapping is for an application in which the modes above are switched and used. This mapping is also for an application in which the following modes are switched and used. • Profile position mode (pp) • Profile velocity mode (pv) • Profile torque mode (tq) • Homing mode (hm) Map size: 24 bytes
2nd TxPDO map (1A01h)	Modes of operation (Obj. 6060h) Padding (1 byte) Statusword (Obj. 6041h) Status DO 1 (Obj. 2D11h) Status DO 2 (Obj. 2D12h) Status DO 3 (Obj. 2D13h) Status DO 5 (Obj. 2D15h) Status DO 7 (Obj. 2D17h) Position actual value (Obj. 6064h) Velocity actual value (Obj. 606Ch) Following error actual value (Obj. 60F4h) Torque actual value (Obj. 6077h) M code actual value (Obj. 2D6Ah) Padding (1 byte) Point demand value (Obj. 2D68h) Point actual value (Obj. 2D69h)	Point table mode (pt) JOG operation mode (jg) Homing mode (hm) This initial mapping is for an application in which the modes above are switched and used. Map size: 34 bytes
3rd TxPDO map (1A02h)	Unassigned	—
4th TxPDO map (1A03h)	Unassigned	—
9th TxPDO map (1A08h)	FSoE Slave Command (Obj. E600h: 01h) STO Status (Obj. F601h: 01h) SSM Status (Obj. F601h: 02h) Padding (1 bit) Padding (3 bit) Error (Obj. F601h: 04h) SS1 Status (Obj. F601h: 05h) SDIP Status (Obj. F601h: 07h) SDIN Status (Obj. F601h: 08h) SLS1 Status (Obj. F601h: 09h) SLS2 Status (Obj. F601h: 0Ah) SLS3 Status (Obj. F601h: 0Bh) SLS4 Status (Obj. F601h: 0Ch) FSoE Slave CRC_0 (Obj. E600h: 03h) SBC Status (Obj. F601h: 0Dh) SLT1 Status (Obj. F601h: 0Fh) SLT2 Status (Obj. F601h: 10h) SLT3 Status (Obj. F601h: 11h) SLT4 Status (Obj. F601h: 12h) Padding (10 bit) FSoE Slave CRC_1 (Obj. E600h: 04h) FSoE Slave ConnectionID (Obj. E600h: 02h)	This initial mapping is for an application in which the safety communication function is used. Map size: 11 bytes

4.4 Variable PDO mapping

Point

PDO mappings can be changed in the Pre-Operational state.

The servo amplifier supports the variable PDO mapping function, which can arrange desired objects in any array for the data transmitted and received with RxPDO and TxPDO.

Variable PDO mapping specifications are shown in the following table.

Communication	Maximum number of objects	Maximum size [byte]	Number of mapping settings
RxPDO	32	64	4 (1600h to 1603h)
TxPDO			4 (1A00h to 1A03h)

PDO mapping objects are shown in the following table.

Index	Sub	Object	Name	Data Type	Access	Description
1600h	0	RECORD	1st Receive PDO Mapping	U8	rw	MR-JET-G-N1 User's Manual (Object Dictionary)
	1 to 32		Mapped Object 001 to Mapped Object 032	U32	rw	
1601h	0	RECORD	2nd Receive PDO Mapping	U8	rw	
	1 to 32		Mapped Object 001 to Mapped Object 032	U32	rw	
1602h	0	RECORD	3rd Receive PDO Mapping	U8	rw	
	1 to 32		Mapped Object 001 to Mapped Object 032	U32	rw	
1603h	0	RECORD	4th Receive PDO Mapping	U8	rw	
	1 to 32		Mapped Object 001 to Mapped Object 032	U32	rw	
1A00h	0	RECORD	1st Transmit PDO Mapping	U8	rw	
	1 to 32		Mapped Object 001 to Mapped Object 032	U32	rw	
1A01h	0	RECORD	2nd Transmit PDO Mapping	U8	rw	
	1 to 32		Mapped Object 001 to Mapped Object 032	U32	rw	
1A02h	0	RECORD	3rd Transmit PDO Mapping	U8	rw	
	1 to 32		Mapped Object 001 to Mapped Object 032	U32	rw	
1A03h	0	RECORD	4th Transmit PDO Mapping	U8	rw	
	1 to 32		Mapped Object 001 to Mapped Object 032	U32	rw	
1C12h	0	ARRAY	Sync Manager 2 PDO Assignment	U8	rw	
	1		PDO Mapping object index of assigned RxPDO	U16	rw	
	2					
	3					
1C13h	0	ARRAY	Sync Manager 3 PDO Assignment	U8	rw	
	1		PDO Mapping object index of assigned TxPDO	U16	rw	
	2					
	3					

When the safety communication function is used

Variable PDO mapping specifications are shown in the following table. The maximum number of RxPDO and TxPDO objects is the same as that when the safety communication function is not used. The safety RxPDO ([Obj. 1608h]) and safety TxPDO ([Obj. 1A08h]) are fixed values.

Communication	Number of objects	Maximum size [byte]	Number of mapping settings
Safety RxPDO	36	Refer to the following.	4 (1600h to 1603h)
Safety TxPDO			4 (1A00h to 1A03h)

The total bytes of objects that can be assigned to PDOs are limited depending on the communication cycle. The table below shows the relations between the communication cycles and PDO sizes. The total bytes of RxPDO and TxPDO are the same as those when the safety communication function is not used. The total bytes of safety RxPDO ([Obj. 1608h]) and safety TxPDO ([Obj. 1A08h]) are fixed values.

Communication cycle [ms]	RxPDO [byte]	TxPDO [byte]
0.25	11	11
0.5 to 8	11	11

PDO mapping objects are shown in the following table.

Index	Sub	Object	Name	Data Type	Access	Description
1608h	0	RECORD	9th Receive PDO Mapping	U8	ro	📖MR-JET-G-N1 User's Manual (Object Dictionary)
	1 to 104		Mapped Object 001 to Mapped Object 104	U32	ro	
1A08h	0	RECORD	9th Transmit PDO Mapping	U8	ro	
	1 to 104		Mapped Object 001 to Mapped Object 104	U32	ro	
1C12h	0	ARRAY	Sync Manager 2 PDO Assignment	U8	rw	
	1		PDO Mapping object index of assigned RxPDO	U16	rw	
	2					
	3					
1C13h	0	ARRAY	Sync Manager 3 PDO Assignment	U8	rw	
	1		PDO Mapping object index of assigned TxPDO	U16	rw	
	2					
	3					

4.5 Objects that require mapping

Objects required for each mode are shown in the following table.

RxPDO

◎: PDO mapping required ○: PDO mapping recommended —: PDO mapping not required

Object name (Index)	Mode								
	csp	csv	cst	pp	pv	tq	pt	jg	hm
Controlword (6040h)	◎	◎	◎	◎	◎	◎	◎	◎	◎
Control DI 1 (2D01h) Gain switching	○	○	—	○	○	—	○	○	—
Control DI 2 (2D02h) Proportional control	○	—	—	○	—	—	○	○	○
Control DI 3 (2D03h)	○	○	○	○	○	○	○	○	○
Target position (607Ah)	◎	—	—	◎	—	—	—	—	—
Target velocity (60FFh)	—	◎	—	—	◎	—	—	—	—
Target torque (6071h)	—	—	◎	—	—	◎	—	—	—
Profile velocity (6081h)	—	—	—	○	—	—	—	○	—
Profile acceleration (6083h)	—	—	—	○	○	—	—	○	—
Profile deceleration (6084h)	—	—	—	○	○	—	—	○	—
Torque slope (6087h)	—	—	—	—	—	○	—	—	—
Velocity limit value (2D20h)	—	—	○	—	—	○	—	—	—
Target point table (2D60h)	—	—	—	—	—	—	◎	—	—

TxPDO

◎: PDO mapping required ○: PDO mapping recommended —: PDO mapping not required

Object name (Index)	Mode								
	csp	csv	cst	pp	pv	tq	pt	jg	hm
Statusword (6041h)	◎	◎	◎	◎	◎	◎	◎	◎	◎
Status DO 1 (2D11h)	○	○	○	○	○	○	○	○	○
Status DO 2 (2D12h)	○	○	○	○	○	○	○	○	○
Status DO 3 (2D13h)	○	○	○	○	○	○	○	○	○
Status DO 5 (2D15h)	—	—	—	—	—	—	○	○	—
Status DO 7 (2D17h)	—	—	—	—	—	—	○	○	—
Position actual value (6064h)	○	○	○	○	○	○	○	○	○
Following error actual value (60F4h)	○	—	—	○	—	—	○	○	—
Velocity actual value (606Ch)	○	○	○	○	○	○	○	○	○
Torque actual value (6077h)	○	○	○	○	○	○	○	○	○
Point actual value (2D69h)	—	—	—	—	—	—	○	○	—
M code actual value (2D6Ah)	—	—	—	—	—	—	○	○	—
Point demand value (2D68h)	—	—	—	—	—	—	○	○	—

5 SDO (Service Data Object) COMMUNICATION

In SDO (Service Data Object) communication, object data can be transmitted and received asynchronously between a master station (controller) and a slave station (servo amplifier).

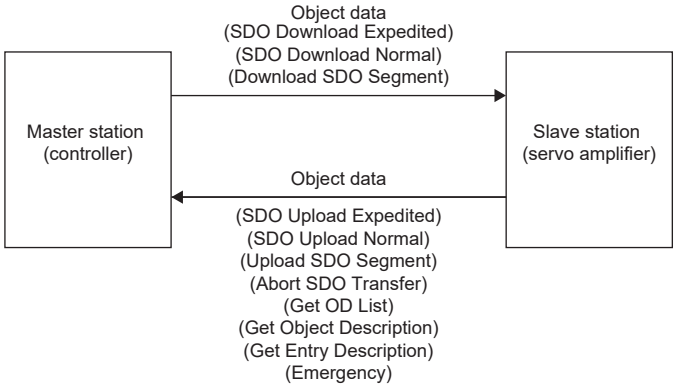

5.1 SDO communication-related services

The servo amplifier supports the following services related with SDO communication.

Services	Description
SDO Download Expedited	This service writes data of up to 4 bytes to the slave station.
SDO Download Normal	This service writes data of the specified bytes to the slave station.
Download SDO Segment	This service writes additional data when the object size is larger than the specified byte size.
SDO Upload Expedited	This service reads data of up to 4 bytes from the slave station.
SDO Upload Normal	This service reads data of the specified bytes from the slave station.
Upload SDO Segment	This service reads additional data when the object size is larger than the specified number of octets.
Abort SDO Transfer	This service notifies the SDO Abort Code when an error occurs in either of the services.
Get OD List	This service reads a list of available object indexes.
Get Object Description	This service reads the detail of indexes.
Get Entry Description	This service reads the detail of Sub indexes.
Emergency	This service notifies an alarm occurrence.

5.2 SDO Abort Code

When an error occurs in SDO communication, the Abort SDO Transfer service returns the following error messages.

SDO Abort Code	Meaning
0504 0005h	Out of memory.
0601 0001h	Attempt to read to a write only object
0601 0002h	Attempt to write to a read only object
0601 0006h	Object mapped to RxPDO, SDO download blocked.
0602 0000h	The object does not exist in the object dictionary
0604 0043h	General parameter incompatibility reason.
0607 0012h	Data type does not match, length of service parameter too high.
0607 0013h	Data type does not match, length of service parameter too short.
0609 0011h	Sub index does not exist
0609 0030h	Value range of parameter exceeded
0609 0031h	Value of parameter written too high
0609 0032h	Value of parameter written too low
0800 0000h	Generic error.
0800 0021h	Data cannot be transferred or stored to the application because of local control
0800 0022h	Data cannot be transferred or stored to the application because of the present device state.

6 SYNCHRONIZATION

6.1 Availability of synchronous mode in control mode

Availability of synchronous mode (DC mode) and asynchronous mode (Free-run mode) in each mode is shown in the following table.

Control mode	Synchronous mode	Asynchronous mode
Cyclic synchronous position mode (csp)	○	○ *1
Cyclic synchronous velocity mode (csv)	○	○ *1
Cyclic synchronous torque mode (cst)	○	○ *1
Profile position mode (pp)	○	○
Profile velocity mode (pv)	○	○
Profile torque mode (tq)	○	○
Point table mode (pt)	○	○
Jog mode (jg)	○	○
Homing mode (hm)	○	○

*1 For servo amplifiers with firmware versions earlier than B6, if a servo motor is driven with this combination, [AL. 09E.9 Control mode setting warning] will occur.

6.2 Synchronous mode (DC mode)

In the synchronous mode, the synchronous jitter needs to be kept less than 2 μs. If the synchronous jitter is 2 μs or more, an error may be detected and an alarm may occur.

—	Sync0	Sync1
[Cycle Time (Obj. 1C32h: 02h)] *1	0.125 ms (when the PDO communication cycle is set to 0.125 ms) 0.25 ms (when the PDO communication cycle is set to 0.25 ms) 0.5 ms (when the PDO communication cycle is set to 0.5 ms) 1 ms (when the PDO communication cycle is set to 1 ms) 2 ms (when the PDO communication cycle is set to 2 ms) 4 ms (when the PDO communication cycle is set to 4 ms) 8 ms (when the PDO communication cycle is set to 8 ms)	Unused

*1 There are restrictions on the communication cycle depending on the function used. For details, refer to "Restrictions on the MR-JET-_G_" in the following manual.
MR-JET-G-N1 User's Manual (Introduction)

6.3 Asynchronous mode (Free-run mode)

When using the cyclic synchronous position mode, cyclic synchronous velocity mode, or cyclic synchronous torque mode in the asynchronous mode (Free-run mode), set them as shown in the table in this section. Enter a command value for each communication cycle set in [Cycle Time (Obj. 1C32h: 02h)]. If the command values are not entered for the communication cycles, the previously entered commands are maintained. Setting this object is not required when using the profile position mode, profile velocity mode, or profile torque mode. Operation can be performed in any communication cycle.

—	**Local Cycle time**
[Cycle Time (Obj. 1C32h: 02h)] *1*2	0.125 ms (when the PDO communication cycle is set to 0.125 ms) 0.25 ms (when the PDO communication cycle is set to 0.25 ms) 0.5 ms (when the PDO communication cycle is set to 0.5 ms) 1 ms (when the PDO communication cycle is set to 1 ms) 2 ms (when the PDO communication cycle is set to 2 ms) 4 ms (when the PDO communication cycle is set to 4 ms) 8 ms (when the PDO communication cycle is set to 8 ms)

*1 When no value is set in Cycle time, the communication cycle is 0.25 ms (initial value). The initial value can be changed with [Pr. PN07 Communication cycle initial setting].

*2 There are restrictions on the communication cycle depending on the function used. For details, refer to "Restrictions on the MR-JET-_G_" in the following manual.
MR-JET-G-N1 User's Manual (Introduction)

7 CiA 402 DRIVE PROFILE

7.1 PDS state transitions

The internal state of the servo amplifier is managed by the PDS state defined in the CiA 402 drive profile standard. After the PDO communication is established (after the AL state has reached "Operational"), the status is controlled by the master station transmitting commands (by setting Controlword) in accordance with the following table. Once the state transitions from "Not ready to switch on," which is the state immediately after the power supply is turned on, to "Operation enabled," the servo motor is ready for operation.

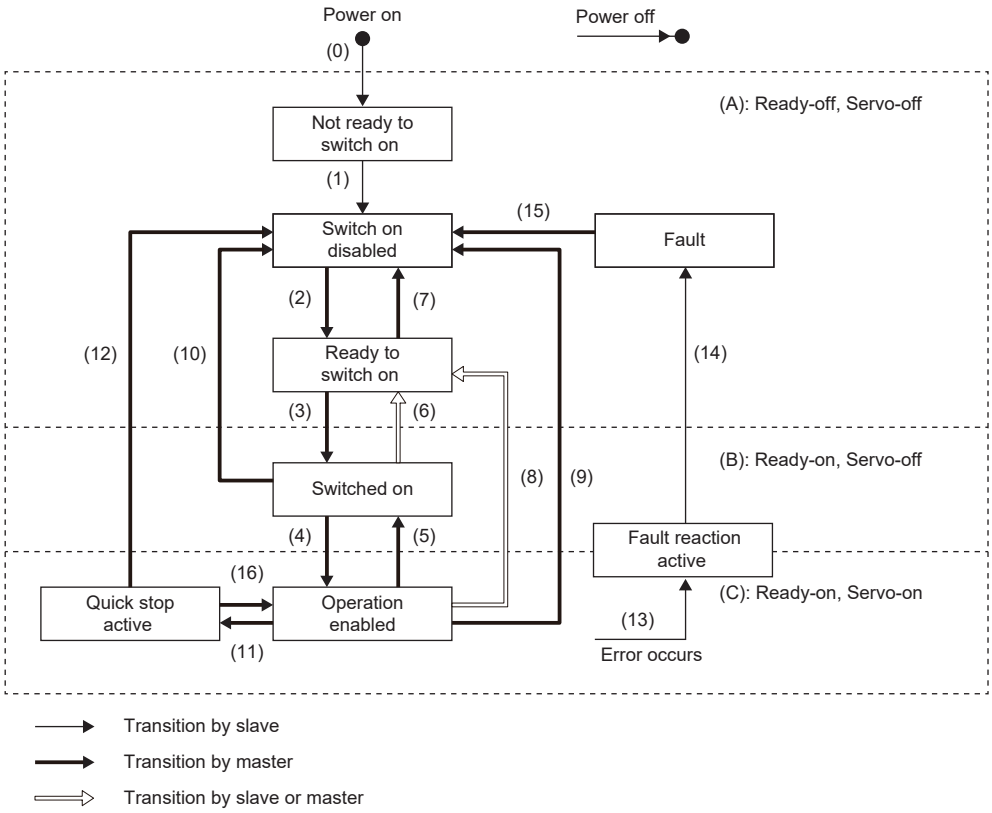

Transition No.	Event	Description
(0)	Power supply is turned on	Initialization
(1)	Transitions automatically when the power supply is turned on	Communication setting
(2)	Transitions with the "Shutdown" command from the master station	—
(3)	Transitions with the "Switch On" command from the master station	The dynamic brake is released.
(4)	Transitions with the "Enable Operation" command from the master station	The operation becomes ready after servo-on.
(5)	Transitions with the "Disable Operation" command from the master station Transitions when RD (Ready) is turned off	The operation is disabled after servo-off.
(6)	Transitions with the "Shutdown" command from the master station	The dynamic brake operates.
(7)	Transitions with the "Disable Voltage" command or "Quick Stop" command from the master station	—
(8)	(A) Transitions with the "Shutdown" command from the master station (B) Transitions when the power supply is turned off (C) Transitions in the servo-off state (see the transition No. (5) if RD is turned off at the same time)	The operation is disabled after servo-off and dynamic braking.
(9)	Transitions with the "Disable Voltage" command from the master station	The operation is disabled after servo-off and dynamic braking.
(10)	Transitions with the "Disable Voltage" command or "Quick Stop" command from the master station	The dynamic brake operates.
(11)	(A) Transitions with the "Quick Stop" command from the master station (B) Transitions when the forced stop signal is turned off *1	Quick Stop starts.

Transition No.	Event	Description
(12) *2	(A) Transitions automatically after the completion of Quick Stop (when the value of [Quick stop option code (Obj. 605Ah)] is any of "1", "2", "3", or "4") (B) Transitions with the "Disable Voltage" command from the master station after completion of "Quick Stop" (C) Transitions when the power supply is turned off (when the value of [Quick stop option code (Obj. 605Ah)] is any of "5", "6", "7", or "8")	The operation is disabled after servo-off and dynamic braking.
(13)	Alarm occurrence	The processing for the alarm occurrence is executed.
(14)	Automatic transition	After the completion of the alarm occurrence processing, the operation is disabled by servo-off or the dynamic brake.
(15)	Transitions with the "Fault Reset" command from the master station	An alarm reset is performed. Resettable alarms are cleared.
(16) *3	Transitions with the "Enable Operation" command from the master station (when the value of [Quick stop option code (Obj. 605Ah)] is any of "5", "6", "7", or "8")	The operation becomes ready.

*1 This event occurs when "1" (Quick stop active) is selected in [Pr. PF29.1 State selection with forced stop in progress].
*2 (C) is available on servo amplifiers with firmware version D0 or later.
*3 Available on servo amplifiers with firmware version D0 or later.

The commands issued to the servo amplifier are shown in the table below. Turn on the Bits relative to the command.

0: Off 1: On —: Either on/off can be used

Command	Command Bit setting of Controlword					Transition No.
	Bit 7 Fault Reset	Bit 3 Enable Operation	Bit 2 Quick Stop	Bit 1 Enable Voltage	Bit 0 Switch On	
Shutdown	0	—	1	1	0	(2), (6), (8)
Switch On	0	0	1	1	1	(3)
Disable Voltage	0	—	—	0	—	(7), (9), (10), (12)
Quick Stop	0	—	0	1	—	(7), (10), (11)
Disable Operation	0	0	1	1	1	(5)
Enable Operation	0	1	1	1	1	(4), (16)
Fault Reset	0 → 1 *1	—	—	—	—	(15)

*1 In order to avoid missing the command at the time of a communication error, maintain the state of Bit 7 = 1 on the Fault Reset command for at least 10 ms when the communication cycle is 4 ms or less, or at least 20 ms when the communication cycle is 8 ms or less.

IIn order to transition from the "Switch on disabled" state to the "Operation enabled" state, give the commands "Shutdown", "Switch On", and "Enable Operation" sequentially. If using an MR-JET servo amplifier, however, it is possible to transition directly from the current state to the target state with one command.

Current state	Command	State after transition
Switch on disabled	Switch On	Switched on
Switch on disabled	Enable Operation	Operation enabled
Ready to switch on	Enable Operation	Operation enabled

7.2 Controlword/Control DI

The PDS states can be switched and control instructions for various driving-related functions can be given by rewriting the Controlword and Control DI x objects from the master station. [Obj. 6040h] is used for the control commands defined by CiA 402, and [Obj. 2D01h] and other objects are used for other control commands defined by Mitsubishi Electric.

Index	Sub	Object	Name	Data Type	Access	Description
6040h	—	VAR	Controlword	U16	rw	—
2D01h	—	VAR	Control DI 1	U16	rw	Object defined by Mitsubishi Electric
2D02h	—	VAR	Control DI 2	U16	rw	Object defined by Mitsubishi Electric
:	:	:	:	:	:	:

Bit definition of Controlword

Bit	Symbol	Description
0	SO	Switch On
1	EV	Enable Voltage
2	QS	Quick Stop
3	EO	Enable Operation
4	OMS	The contents differ depending on the setting of [Modes of operation (Obj. 6060h)]. Refer to "Control mode" in the following manual. MR-JET User's Manual (Function)
5		
6		
7	FR	Fault Reset
8	HALT	0: Operation ready 1: Temporary stop
9	OMS	The contents differ depending on the setting of [Modes of operation]. Refer to "Control mode" in the following manual. MR-JET User's Manual (Function)
10	—	The value at reading is undefined. Set "0" when writing.
11	CPTL	Positive Torque Limit switching ☞ Page 56 Torque limit selection
12	CNTL	Negative Torque Limit switching ☞ Page 56 Torque limit selection
13	—	The value at reading is undefined. Set "0" when writing.
14		
15		

Bit definition of Control DI

• Control DI 1

Bit	Symbol	Description	Reference
0	—	The value at reading is undefined. Set "0" when writing.	—
1	—		—
2	—		—
3	—		—
4	C_CDP	Gain switching	Refer to "Signal (device) explanations" in the following manual. MR-JET User's Manual (Hardware)
5	C_CLD *1	Fully closed loop selection	
6	—	The value at reading is undefined. Set "0" when writing.	—
7	—		—
8	—		—
9	—		—
10	—		—
11	—		—
12	—		—
13	—		—
14	—		—
15	—		—

*1 Available on servo amplifiers with firmware version C4 or later.

• Control DI 2

Bit	Symbol	Description	Reference
0	—	The value at reading is undefined. Set "0" when writing.	—
1	—		—
2	—		—
3	—		—
4	—		—
5	—		—
6	—		—
7	—		—
8	C_PC	Proportional control	Refer to "Signal (device) explanation" in the following manual. MR-JET User's Manual (Hardware)
9	—	The value at reading is undefined. Set "0" when writing.	—
10	—		—
11	—		—
12	—		—
13	—		—
14	—		—
15	C_ORST *1	Operation alarm reset Turning on C_ORST resets [AL. 0F4 Positioning warning].	—

*1 Available on servo amplifiers with firmware version B2 or later.

• Control DI 3

Bit	Symbol	Description	Reference
0	—	The value at reading is undefined. Set "0" when writing.	—
1	—		—
2	—		—
3	—		—
4	—		—
5	—		—
6	—		—
7	—		—
8	—		—
9	—		—
10	—		—
11	—		—
12	—		—
13	—		—
14	—		—
15	—		—

• Control DI 4

Bit	Symbol	Description	Reference
0	—	The value at reading is undefined. Set "0" when writing.	—
1	—		—
2	—		—
3	—		—
4	—		—
5	—		—
6	—		—
7	—		—
8	—		—
9	—		—
10	—		—
11	—		—
12	—		—
13	—		—
14	—		—
15	—		—

• Control DI 5

Bit	Symbol	Description	Reference
0	—	The value at reading is undefined. Set "0" when writing.	—
1	—		—
2	—		—
3	—		—
4	C_CDP2	Gain switching 2	Refer to "Signal (device) explanation" in the following manual. MR-JET User's Manual (Hardware)
5	—	The value at reading is undefined. Set "0" when writing.	—
6	—		—
7	—		—
8	—		—
9	—		—
10	—		—
11	—		—
12	—		—
13	—		—
14	—		—
15	—		—

• Control DI 6

Bit	Symbol	Description	Reference
0	—	The value at reading is undefined. Set "0" when writing.	—
1	—		—
2	—		—
3	—		—
4	—		—
5	—		—
6	—		—
7	—		—
8	—		—
9	—		—
10	—		—
11	—		—
12	—		—
13	—		—
14	—		—
15	—		—

• Control DI 7

Bit	Symbol	Description	Reference
0	—	The value at reading is undefined. Set "0" when writing.	—
1	—		—
2	—		—
3	—		—
4	—		—
5	—		—
6	—		—
7	C_OVR*1	Override selection	Refer to "Override function" in the following manual. 📖MR-JET User's Manual (Function)
8	—	The value at reading is undefined. Set "0" when writing.	—
9	—		—
10	—		—
11	—		—
12	—		—
13	—		—
14	—		—
15	—		—

*1 Available on servo amplifiers with firmware version D4 or later.

• Control DI 8

Bit	Symbol	Description	Reference
0	—	The value at reading is undefined. Set "0" when writing.	—
1	—		—
2	—		—
3	—		—
4	—		—
5	—		—
6	—		—
7	—		—
8	—		—
9	—		—
10	—		—
11	—		—
12	—		—
13	—		—
14	—		—
15	—		—

• Control DI 9

Bit	Symbol	Description	Reference
0	—	The value at reading is undefined. Set "0" when writing.	—
1	—		—
2	—		—
3	—		—
4	—		—
5	—		—
6	—		—
7	—		—
8	—		—
9	—		—
10	—		—
11	—		—
12	—		—
13	—		—
14	—		—
15	—		—

• Control DI 10

Bit	Symbol	Description	Reference
0	—	The value at reading is undefined. Set "0" when writing.	—
1	—		—
2	—		—
3	—		—
4	—		—
5	—		—
6	—		—
7	—		—
8	—		—
9	—		—
10	—		—
11	—		—
12	—		—
13	—		—
14	—		—
15	—		—

7.3 Statusword/Status DO

The Statusword objects and the Status DO x objects notify the master station of the PDS state and other drive states. States defined by CiA 402 are notified by using [Obj. 6041h], and states defined by Mitsubishi Electric are notified by using [Obj. 2D11h].

Index	Sub	Object	Name	Data Type	Access	Description
6041h	—	VAR	Statusword	U16	ro	—
2D11h	—	VAR	Status DO 1	U16	ro	Object defined by Mitsubishi Electric
2D02h	—	VAR	Status DO 2	U16	ro	Object defined by Mitsubishi Electric
:	:	:	:	:	:	:

Bit definition of Statusword

Bit	Symbol	Description
0	RTSO	Ready-to-switch-on
1	SO	Switch-on
2	OE	Operation-enabled
3	F	Fault
4	VE	Voltage-enabled 0: The bus voltage is lower than the specified (RA) level. 1: The bus voltage is equal to or higher than the specified level.
5	QS	Quick stop 0: In a Quick stop 1: Not in a Quick stop (including in the test mode)
6	SOD	Switch on disabled
7	W	Warning 0: No warning has occurred. 1: A warning has occurred.
8	—	The value at reading is undefined.
9	RM	Remote 0: Not following the Controlword command. 1: Operating in accordance with the Controlword command.
10	OMS	Operation Mode Specific The contents differ depending on the setting of [Modes of operation (Obj. 6060h)]. Refer to "Control mode" in the following manual. 📖MR-JET User's Manual (Function)
11	ILA	Internal limit active 0: The forward rotation stroke end, reverse rotation stroke end, and software position limit have not been reached. 1: The forward rotation stroke end, reverse rotation stroke end, or software position limit has been reached. (Enabled in csp, csv, pp, pv, hm, pt, or jg mode)
12	OMS	Operation Mode Specific The contents differ depending on the setting of [Modes of operation (Obj. 6060h)]. Refer to "Control mode" in the following manual. 📖MR-JET User's Manual (Function)
13		
14	—	The value at reading is undefined.
15		

Bit 0 to Bit 3, Bit 5, and Bit 6 are switched depending on the PDS state (servo amplifier internal state). Refer to the following table for details.

Statusword (bin)	PDS state
x0xx xxx0 x0xx 0000	Not ready to switch on *1
x0xx xxx0 x1xx 0000	Switch on disabled
x0xx xxx0 x01x 0001	Ready to switch on
x0xx xxx0 x01x 0011	Switched on
x0xx xxx0 x01x 0111	Operation enabled
x0xx xxx0 x00x 0111	Quick stop active
x0xx xxx0 x0xx 1111	Fault reaction active
x0xx xxx0 x0xx 1000	Fault

*1 Statusword is not sent when in the "Not ready to switch on" state.

Bit definition of Status DO

• Status DO 1

Bit	Symbol	Description	Reference
0	—	The value at reading is undefined.	—
1	—		—
2	S_SA	Speed reached	Refer to "Signal (device) explanations" in the following manual. MR-JET User's Manual (Hardware)
3	S_MBR	Electromagnetic brake interlock	
4	S_CDPS	Variable gain enabled	
5	S_CLDS *1	Fully closed loop control in progress	
6	—	The value at reading is undefined.	—
7	—		—
8	—		—
9	—		—
10	—		—
11	—		—
12	S_INP	In-position	Refer to "Signal (device) explanations" in the following manual. MR-JET User's Manual (Hardware)
13	S_TLC	Limiting torque	
14	S_ABSV	Absolute position erased	
15	S_BWNG	Battery warning	

*1 Available on servo amplifiers with firmware version C4 or later.

• Status DO 2

Bit	Symbol	Description	Reference
0	S_ZPASS	Z-phase already passed After the Z-phase is passed, S_ZPASS turns on.	—
1	—	The value at reading is undefined.	—
2	—		—
3	S_ZSP	Zero speed detection	Refer to "Signal (device) explanation" in the following manual. MR-JET User's Manual (Hardware)
4	S_VLC	Limiting speed	
5	—	The value at reading is undefined.	—
6	S_IPF	In IPF During instantaneous power failure, S_IPF is on.	—
7	—	The value at reading is undefined.	—
8	S_PC	Proportional control in progress S_PC turns on under proportional control.	—
9	—	The value at reading is undefined.	—
10	S_DB	External dynamic brake output	—
11	—	The value at reading is undefined.	—
12	—		—
13	—		—
14	—		—
15	S_ZP2	Homing completion 2 When homing finishes successfully, S_ZP2 turns on.	—

• Status DO 3

Bit	Symbol	Description	Reference
0	—	The value at reading is undefined.	—
1	—		—
2	—		—
3	—		—
4	—		—
5	S_STO *1	In STO state S_STO turns on in the STO state.	Refer to "Monitor signal (digital)" in the following manual. MR-JET User's Manual (Function)
6	—	The value at reading is undefined.	—
7	—		—
8	—		—
9	—		—
10	—		—
11	S_MTTR	Tough drive in progress	Refer to "Tough drive function" in the following manual. MR-JET User's Manual (Function)
12	—	The value at reading is undefined.	—
13	—		—
14	—		—
15	—		—

*1 This function is available only on the MR-JET-_G_- HSN1.

• Status DO 4

Bit	Symbol	Description	Reference
0	—	The value at reading is undefined.	—
1	—		—
2	—		—
3	—		—
4	—		—
5	—		—
6	—		—
7	—		—
8	—		—
9	—		—
10	—		—
11	—		—
12	—		—
13	—		—
14	—		—
15	—		—

• Status DO 5

Bit	Symbol	Description	Reference
0	—	The value at reading is undefined.	—
1	—		—
2	—		—
3	—		—
4	S_CDPS2	Variable gain enabled 2	Refer to "GAIN SWITCHING FUNCTION" in the following manual. MR-JET User's Manual (Adjustment)
5	S_CPO *2	Rough match When the command remaining distance is less than the value of the rough match output range set in [Pr. PT12], S_CPO is on.	—
6	S_MEND *3	Traveling completion If droop pulses are within the in-position output range set in [Pr. PA10] and the command remaining distance is "0", S_MEND turns on. S_MEND turns on at servo-on. S_MEND is off in the servo-off status.	—
7	—	The value at reading is undefined.	—
8	—		—
9	—		—
10	—		—
11	—		—
12	—		—
13	—		—
14	—		—
15	—		—

*2 Available on servo amplifiers with firmware version B2 or later.
*3 Available on servo amplifiers with firmware version B8 or later.

• Status DO 6

Bit	Symbol	Description	Reference
0	—	The value at reading is undefined.	—
1	—		—
2	—		—
3	—		—
4	—		—
5	—		—
6	—		—
7	—		—
8	—		—
9	—		—
10	—		—
11	—		—
12	—		—
13	—		—
14	—		—
15	—		—

• Status DO 7

Bit	Symbol	Description	Reference
0	—	The value at reading is undefined.	—
1	—		—
2	S_POT *1	Position range When the actual current position is within the range set in [Pr. PT19] and [Pr. PT21], S_POT is on. When homing is not complete or base circuit shut-off is in progress, S_POT is off.	—
3	—	The value at reading is undefined.	—
4	—		—
5	—		—
6	—		—
7	—		—
8	—		—
9	—		—
10	—		—
11	—		—
12	—		—
13	—		—
14	—		—
15	—		—

*1 Available on servo amplifiers with firmware version B2 or later.

• Status DO 8

Bit	Symbol	Description	Reference
0	—	The value at reading is undefined.	—
1	—		—
2	—		—
3	—		—
4	—		—
5	—		—
6	—		—
7	—		—
8	—		—
9	—		—
10	—		—
11	—		—
12	—		—
13	—		—
14	—		—
15	—		—

• Status DO 9

Bit	Symbol	Description	Reference
0	—	The value at reading is undefined.	—
1	—		—
2	—		—
3	—		—
4	—		—
5	—		—
6	—		—
7	—		—
8	—		—
9	—		—
10	—		—
11	—		—
12	—		—
13	—		—
14	—		—
15	—		—

• Status DO 10

Bit	Symbol	Description	Reference
0	—	The value at reading is undefined.	—
1	—		—
2	—		—
3	—		—
4	—		—
5	—		—
6	—		—
7	—		—
8	—		—
9	—		—
10	—		—
11	—		—
12	—		—
13	—		—
14	—		—
15	—		—

7.4 Control mode

Point

- The control mode is set to the cyclic synchronous position mode as a default. When using the cyclic synchronous position mode, perform alignment with the upper controller at servo-on.
- When using the profile mode, switch to the mode in the servo-off state. After the control mode is switched, turn on the servo-on.
- Switching the control mode without performing alignment may cause unexpected operation of the servo motor such as quick acceleration.

Selecting a control mode (Modes of operation)

Specify a control mode with [Modes of operation (Obj. 6060h)]. [Modes of operation] can be rewritten with a PDO or an SDO. The available control modes are limited as follows depending on the setting value of [Pr. PT01.2].

○: Supported, —: Not supported

[Pr. PA01.0]	[Pr. PT01.2]	pp	pv	tq	hm	csp	csv	cst	jg	pt	6061h initial value
0	2 (degree)	○	○	○	○	—	—	—	—	—	1 (pp)
	3 (pulse)	○	○	○	○	○	○	○	—	—	8 (csp)
6	0 (mm)	—	—	—	○	—	—	—	○	○	-101 (pt)
	1 (inch)										
	2 (degree)										
	3 (pulse)										

Index	Sub	Object	Name	Data Type	Access	Description
6060h	—	VAR	Modes of operation	I8	rw	0: No mode change/No mode assigned 1: Profile position mode (pp) 3: Profile velocity mode (pv) 4: Profile torque mode (tq) 6: Homing mode (hm) 8: Cyclic sync position mode (csp) 9: Cyclic sync velocity mode (csv) 10: Cyclic sync torque mode (cst) -100: Jog mode (jg) -101: Point table Mode (pt)
6061h	—	VAR	Modes of operation display	I8	ro	0: No mode assigned 1: Profile position mode (pp) 3: Profile velocity mode (pv) 4: Profile torque mode (tq) 6: Homing mode (hm) 8: Cyclic sync position mode (csp) 9: Cyclic sync velocity mode (csv) 10: Cyclic sync torque mode (cst) -100: Jog mode (jg) -101: Point table Mode (pt)
6502h	—	VAR	Supported drive modes	U32	ro	Bit =1 for the following modes bit 0: Profile position mode bit 2: Profile velocity mode bit 3: Profile torque mode bit 5: Homing mode bit 7: Cyclic sync position mode bit 8: Cyclic sync velocity mode bit 9: Cyclic sync torque mode bit 16: Jog mode (jg) bit 17: Point table Mode (pt)

Control switching

Point

- The OMS bit of [Controlword (Obj. 6040h)] is not accepted until the control switching is complete. Before inputting commands, check that the control mode has been switched by referring to [Modes of operation display (Obj. 6061h)]. In addition, switch the control modes when the start command is turned off. (For example, when "Homing operation start" is turned off in hm mode.)
- Update [Target position (Obj. 607Ah)] and [Position offset (Obj. 60B0h)] to [Position actual value (Obj. 6064h)] when changing the control mode from the mode other than the cyclic synchronous position mode (csp) to the cyclic synchronous position mode (csp).

Control switching between position/speed/torque modes

As there is a time lag in the control mode switching processing, the controller must keep sending the command value corresponding to the control mode until the mode is completely switched. After the completion of the control mode switching is confirmed by [Modes of operation display], the controller can stop sending the command value relative to the control mode before switching.

Before switching to or from the position mode, check that the servo motor is in zero speed state. Data of whether the servo motor is in zero speed state can be obtained by Bit 3 (S_ZSP) of [Status DO 2 (Obj. 2D12h)]. If the motor is not in zero speed state, the control mode will not be switched and therefore [Modes of operation display (Obj. 6061h)] will not change. To switch the control mode regardless of the zero speed state, set [Pr. PC76.1 ZSP disabled selection at control switching] to "1" to disable the monitoring of zero speed state. When the monitoring of zero speed state is disabled, a shock may occur at control switching.

Control switching between cyclic mode (csp, csv, and cst) and profile mode (pp, pv, and tq)

The control mode is switched between the cyclic mode (csp, csv, and cst) and the profile mode (pp, pv, and tq) only if the condition for control switching is met, following which [Modes of operation display (Obj. 6061h)] is changed. If the condition for control switching is not met, the control mode will not be switched and the value in [Modes of operation display (Obj. 6061h)] will not be changed. The condition for control switching is "Motor being stopped".

"Motor being stopped" means that S_ZSP (Bit 3 of [Status DO 2 (Obj. 2D12h)]) is on.

(Servo motor speed being less than zero speed set in [Pr. PC07])

Setting "1" (disabled (control switching is performed regardless of the range of ZSP)) to [Pr. PC76.1] enables the control mode to be switched without checking the condition "Motor being stopped" on the servo amplifier. Set "1" to [Pr. PC76.1] only if switching the control mode without waiting for the motor to stop. Switching the control mode without waiting for the motor to stop may cause a shock.

The following shows a timing chart of control switching between the cyclic mode (csp, csv, and cst) and the profile mode (pp, pv, and tq).

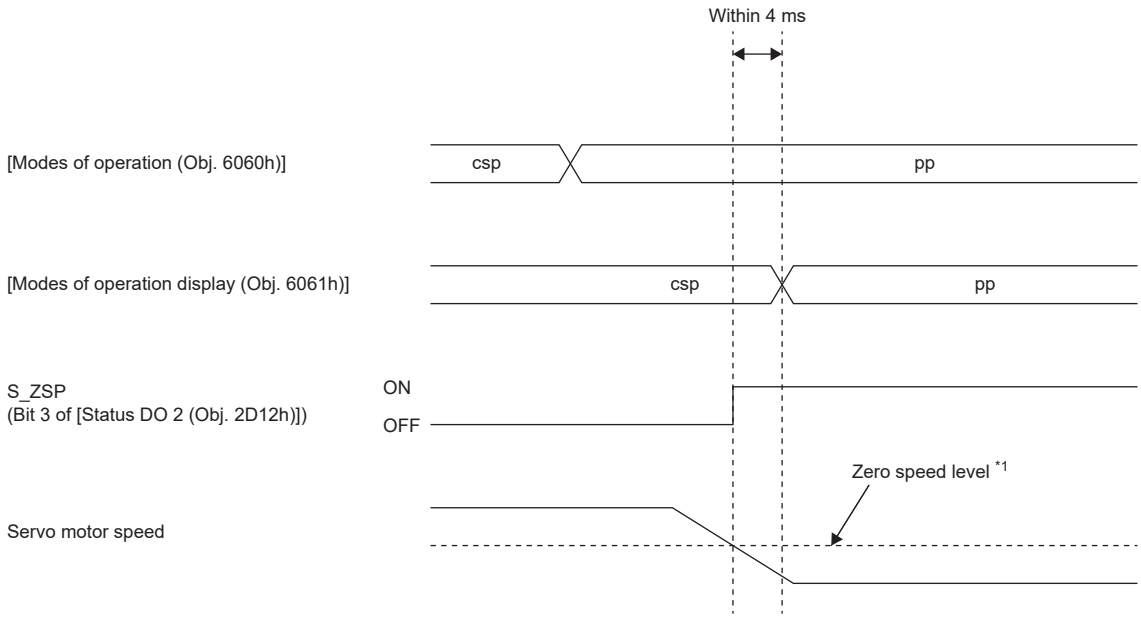

*1 Switching from the profile position mode (pp) can only be performed when the servo motor speed is zero or below and the command output has been completed. Completion of the command output can be checked with bit 12 (S_INP) of [Status DO 1 (Obj. 2D11h)] by setting [Pr. PD13.2 INP output signal ON condition selection] to "1" (within the in-position range and at the completion of command output).

Control switching in positioning mode

Refer to "Control switching in positioning mode" in the following manual.

MR-JET User's Manual (Function)

8 STARTUP

For the startup procedures other than the network settings, refer to the following user's manual.
MR-JET-G-N1 User's Manual (Introduction)

Precautions

To ensure the safety of the system against unauthorized network access, take security measures such as using a firewall.

Point

For servo amplifiers with firmware version D4 or later, the PDO Mapping attribute of the objects has been changed. To use the PDO Mapping attribute before the change, set "1" in [Pr. PN03.3 Object attribute selection]. For details, refer to "[Pr. PN03.3_Object attribute selection]" in the following manual.
MR-JET-G User's Manual (Parameters)
When setting "1" in [Pr. PN03.3], contact the sales representative for available ESI files.

The servo amplifiers with firmware version E8 or later support ESI files in both Device format and Module format. When using the safety communication function, use ESI files in Module format. If the controller being used cannot read ESI files that support the Module format, use ESI files created only in the conventional Device format. However, the safety communication function cannot be used with ESI files created only in Device format.

8.1 Absolute position detection system configuration

Outline

Controllers not using homing mode with the servo amplifier manage the home position via the controller, so setting of a home position is not performed for the servo amplifier. Refer to this section for information about how to configure the absolute position detection system for controllers not using homing mode with the servo amplifier.
When using homing mode with the servo amplifier, refer to "CONTROL MODE" in the following manual.
MR-JET User's Manual (Function)

Precautions and restrictions

- [Pr. PC41.0 [AL. 090.1 Homing incomplete] detection selection] can only be used in cyclic synchronous position mode (csp).
- Setting of a home position is not performed for the servo amplifier, so the software limit function ([Software position limit (Obj. 607Dh)]) cannot be used.
- When [AL. 025 Absolute position erased] occurs, perform homing again via the controller to prevent an unexpected operation.
- Do not rotate the servo motor in excess of 2147483647 pulses without an EtherCAT communication established. Doing so causes the controller to be unable to correctly restore to the current position when the EtherCAT communication is established.
- Once the relevant settings for the absolute position detection system have been performed, the absolute position cannot be managed with the servo amplifier. To prevent unexpected operation, perform management of the absolute position via the controller.

Startup procedure

Battery installation

If using a servo motor that requires installation of a battery in order to configure the absolute position detection system, install the battery as necessary.

Parameter setting

■Absolute position detection system selection

To enable the absolute position detection system, set [Pr. PA03.0] to "1" (enabled (absolute position detection system)).

■[AL. 0E3 Absolute position counter warning] selection

If the travel distance from the home position is 32768 rev or more, [AL. 0E3.1] occurs.

To disable [AL. 0E3], set [Pr. PC29.5 [AL. 0E3 Absolute position counter warning] selection] to "0" (disabled).

■[AL. 090.1 Homing incomplete] detection selection

[AL. 090.1] occurs at servo-on if a home position has not been set for the servo amplifier.

To disable [AL. 090.1], set [Pr. PC41.0 [AL. 090.1 Homing incomplete] detection selection] to "1" (disabled).

[AL. 025.1 Servo motor encoder absolute position erased] deactivation

[AL. 025.1 Servo motor encoder absolute position erased] occurs when performing initial settings for the absolute position detection system.

Wait for 5 seconds, then cycle the power to deactivate the alarm.

Homing

Be sure to perform homing before performing positioning operation.

8.2 Connecting Ethernet cables

Point

- Use a twisted pair cable (double shielded) compliant with Ethernet Category 5e (100BASE-TX) or higher as an Ethernet cable. The maximum cable length between nodes is 100 m.
- When connecting Ethernet cables to servo amplifiers, be aware that CN1A is the IN port and CN1B is the OUT port.

Connect the Ethernet cable connected to the controller or the preceding servo amplifier to CN1A (IN port). Connect the Ethernet cable connected with the succeeding servo amplifier to CN1B (OUT port). Leave CN1B (OUT port) open if not using it.

When the node address is not used, an incorrect connection destination sets node addresses that do not correspond to the actual connection order and may cause a malfunction, such as an operation of an unintended axis.

The following figure shows a connection example viewed from the top surface of the servo amplifiers.

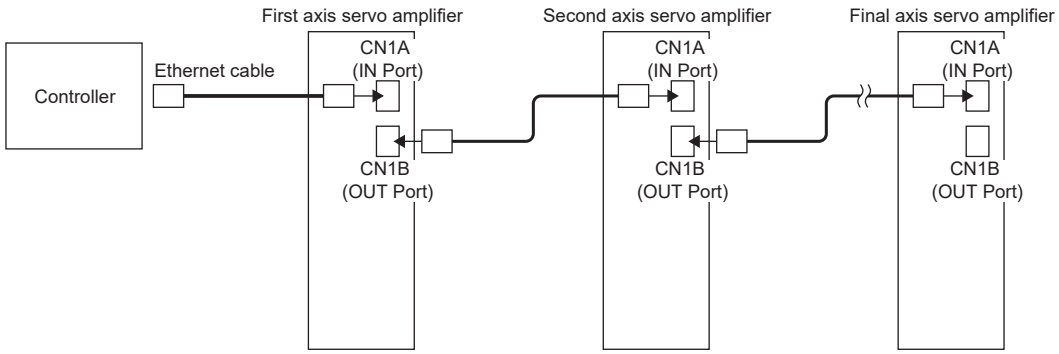

8.3 Example set-up procedure

Set up the controller by following its manual. An example set-up procedure is shown below.

Controller settings

ESI file installation

Point

Use the latest ESI file when setting up a controller. If the ESI file is old, newly added objects may not be usable. For the ESI files usable with your servo amplifier, contact your local sales office.

Store the EtherCAT Slave Information (ESI) file, which lists information about the communication settings of devices, on the controller. The controller configures settings of connected slave stations in accordance with their ESI files.
In addition, the ENI file is generated from the online information that is read from the object dictionary or the EEP-ROM in the slave station (or both). For details, refer to the manual for the controller being used.

Node address setting

Point

The node address of a servo amplifier is set according to Explicit Device Identification. Configure the settings complied with Explicit Device Identification to the controller.
Do not connect several devices which have the same node address setting.

Set a node address in EtherCAT as necessary with ID setting switches (SW1/SW2) on the display, [Pr. NPA09 Node address setting], or with SII Configured Station Alias. After the node address settings are changed, cycle the power.

■Identifying slave stations with node addresses

The controller can identify slave stations by the node address using AL Status Code (ESC register: 0134h) or Configured Station Alias (ESC register: 0012h). Identify the slave stations by using either code.

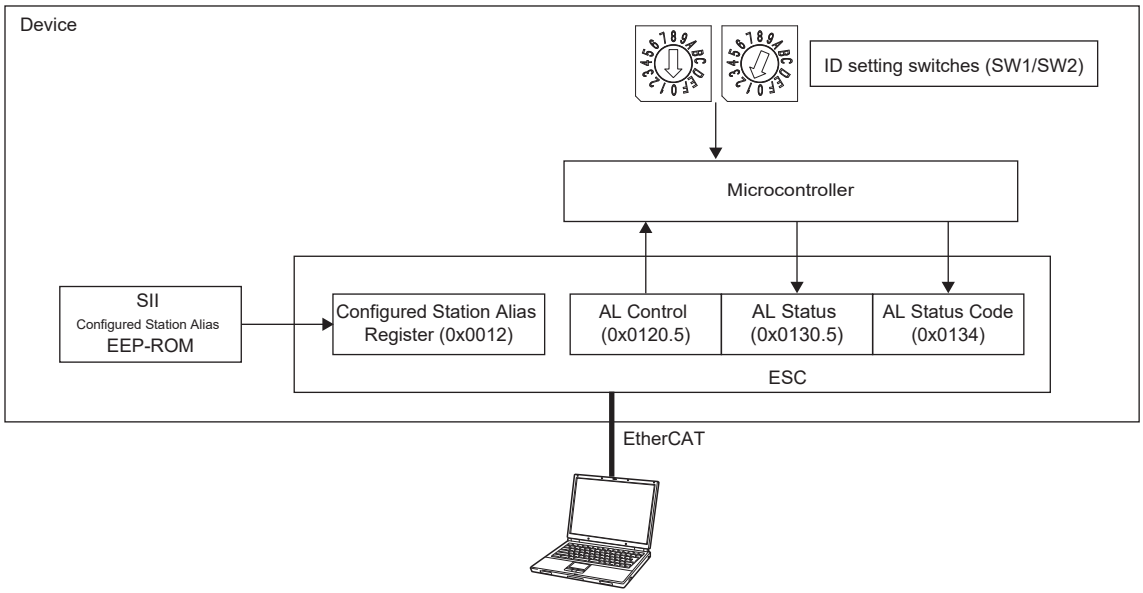

• Identifying with AL Status Code (ESC register: 0134h)

Set the node address with the ID setting switches (SW1/SW2) or [Pr. NPA09] by referring to the following table. Set the master station using AL Status Code (ESC register: 0134h) so that the node address is recognized.

When using [Pr. NPA09] for the node address, set the ID setting switches (SW1/SW2) to "00h".

When using the ID setting switches (SW1/SW2) for the node address, the value set in [Pr. NPA09] is not reflected in the node address.

ID setting switches (SW1/SW2)	[Pr. NPA09]	Node address
00h	00000000h to 0000FFFFh	The setting value of [Pr. NPA09] is the node address.
01h to FFh	—	The node address comprises of the setting values of ID setting switches (SW1/SW2).

• Identifying with Configured Station Alias (ESC register: 0012h)

Write the value of the node address to SII Configured Station Alias (ESC register: 0012h) from the master station (controller). The node address is saved on EEP-ROM. Set the master station so that SII Configured Station Alias (ESC register: 0012h) is recognized as a node address.

Mapping settings

When mapping objects that transmit command data and feedback data using PDO communication, perform the settings via the controller.

For information regarding the default mappings of the servo amplifier, refer to the following section.

☞ Page 21 PDO default mapping

Communication setting

For settings related to communication between the controller and servo amplifier, perform the settings via the controller. For information regarding settable communication cycles, refer to the following section.

☞ Page 14 Communication specifications

For the servo amplifier, synchronous mode (DC mode) and asynchronous mode (FreeRun mode) can be set. Set the mode that is appropriate for the application.

Establishing the communication

Point

- It is recommended that you change the setting value of [Pr. PN18 Counter level for communication error detection] according to the system configuration.
- If the communication error counter increases, change the communication cycle of the controller and check the wiring of the Ethernet cable.
- When [Pr. PN18] is set to "0", the servo motor does not stop at occurrence of a communication error. In addition, setting a larger value for [Pr. PN18] as the setting value increases the time it takes to stop the servo motor when there is a communication error. Set [Pr. PN18] carefully as there is a danger of collision.
- When [AL. 086.1 Network communication error 1] occurs, the communication error counter is clamped at the setting value of [Pr. PN18]. When [Pr. PN18] is set to "0", the communication error counter does not increase.

Start communication with the controller, then confirm that "r" appears on the 7-segment LED display.
Follow the manual for the controller being used when starting communication.
If [AL. 086.1 Network receive data error (Network communication error 1)] occurs, set a threshold in [Pr. PN18 Counter level for communication error detection] or [Sync Error Counter Limit (Obj. 10F1h: 02h)] that is appropriate for the controller being used.
The communication error counter can be checked with the graph function "EtherCAT communication error counter" of MR Configurator2.

Operating the servo motor

An example procedure for operating in cyclic synchronous position mode (csp) is shown below.

Homing mode settings

To operate in cyclic synchronous position mode (csp), first perform homing. Set [Modes of operation (Obj. 6060h)] to "6" (Homing mode), then confirm that [Modes of operation display (Obj. 6061h)] has changed to "6" (Homing mode). For information regarding the settings of other control modes, refer to the following section.
☞ Page 46 Control mode
If performing homing via the controller without using homing mode, refer to the following section.
☞ Page 49 Absolute position detection system configuration

Servo-on

Set the control command issued from the controller to [Controlword (Obj. 6040h)], then change the internal state of the servo amplifier to the "servo-on" state.
For details of the servo amplifier internal states, refer to the following.
☞ Page 31 PDS state transitions

Homing

Set the homing method in [Homing method (Obj. 6098h)], then perform homing.
For details of homing, refer to "Homing mode (hm) and homing" in the following manual.
MR-JET User's Manual (Function)

Starting servo motor operation

Confirm that homing is complete, then change the control mode to cyclic synchronous mode. Drive the servo motor by giving commands to [Target position (Obj. 607Ah)], etc. in accordance with the desired operation pattern.

Disconnecting the network

To disconnect the network when stopping the operation of equipment, follow the procedure shown below. Failing to follow the procedure exactly may cause [AL. 086.1 Network communication error 1].

1. Stop the servo motor.
2. Set the Shutdown command for [Controlword (Obj. 6040h)] to establish the servo-off state.
3. Switch the state to the Pre-Operational state.
4. Shut off the power of the servo amplifier and the controller.

9 MANUFACTURER-SPECIFIC FUNCTION

9.1 Torque limit selection

The torque limit selection function is a function that switches the torque limit value by using Bit 11 (CPTL) and Bit 12 (CNTL) of [Controlword (Obj. 6040h)].
The settings of the torque limit selection ([Obj. 2D6Dh]) are as follows.

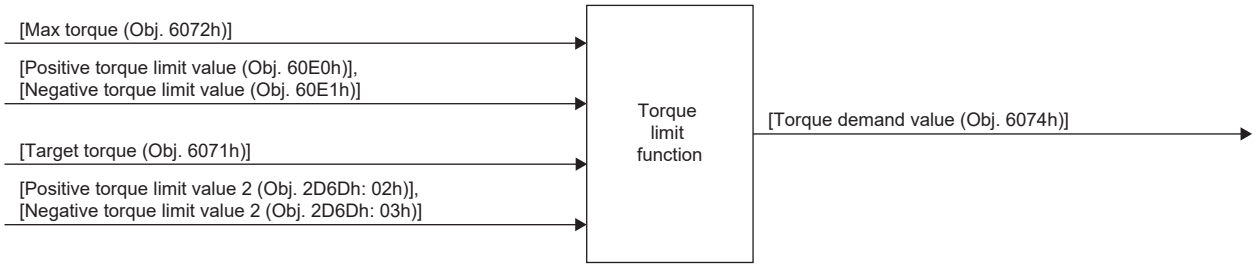

Torque limit

Index	Sub	Name	Data Type	Access	PDO Mapping
2D6Dh	0	Positive/Negative torque limit 2 setting	U8	ro	Impossible
	1	Positive/Negative torque limit 2 select	U16	rw	
	2	Positive torque limit value 2			
	3	Negative torque limit value 2			

Index	Sub	Default	Range	Units	Save	Parameter
2D6Dh	0	3	3h to 3h (3)	—	Impossible	—
	1	0	0000h to 0001h (1)	—	Possible	[Pr. PC42]
	2	10000	0 to 10000	per thousand of rated torque		POL disabled: [Pr. PC43 Forward rotation torque limit 2] POL enabled: [Pr. PC44 Reverse rotation torque limit 2]
	3	10000				POL disabled: [Pr. PC44 Reverse rotation torque limit 2] POL enabled: [Pr. PC43 Forward rotation torque limit 2]

For the combinations of servo parameters and objects that are switched by CPTL/CNTL, refer to the following table.

[Pr. PC42.0]/ [Positive/Negative torque limit 2 select (Obj. 2D6Dh: 01h)]	Forward rotation torque limit value		Reverse rotation torque limit value	
	CPTL: 0	CPTL: 1	CNTL: 0	CNTL: 1
0h/ 0000h	[Pr. PA11]/ [Positive torque limit value (Obj. 60E0h)]	[Pr. PA11]/ [Positive torque limit value (Obj. 60E0h)]	[Pr. PA12]/ [Negative torque limit value (Obj. 60E1h)]	[Pr. PA12]/ [Negative torque limit value (Obj. 60E1h)]
1h/ 0001h	[Pr. PA11]/ [Positive torque limit value (Obj. 60E0h)]	[Pr. PC43]/ [Positive torque limit value 2 (Obj. 2D6Dh: 02h)]	[Pr. PA12]/ [Negative torque limit value (Obj. 60E1h)]	[Pr. PC44]/ [Negative torque limit value 2 (Obj. 2D6Dh: 03h)]

9.2 Infinite feed function

Outline

When this function is used in an absolute position detection system, even if the servo motor rotates 32768 rev or more in the same direction, [AL. 0E3.1 Multi-revolution counter travel distance exceeded warning] will not occur and the home position will not be erased. Therefore, the current position will be restored after the power is cycled. When this function is not used, if the servo motor rotates 32768 rev or more in the same direction, [AL. 0E3.1] will occur and the home position will be erased.

Setting method

Set [Pr. PT85.0 Infinite feed function selection] to "1".

Servo parameter	Name	Description
PT85.0	Infinite feed function selection	0: Disabled 1: Enabled

When the servo motor rotates 32768 rev or more

The following table shows whether [AL. 0E3.1] will occur, the home position will be erased, and the current position will be restored when the servo motor rotates 32768 rev or more.

Control mode	Unit for position data	[AL. 0E3.1]	Home position	Current position
Cyclic synchronous mode	pulse	Will not occur	Will not be erased	Will be restored
Profile mode	degree	Will not occur *1	Will not be erased	Will be restored
	pulse	Will occur *1	Will be erased	Will not be restored
Positioning mode (point table method)	mm	Will occur *1	Will be erased	Will not be restored
	inch	Will occur *1	Will be erased	Will not be restored
	degree	Will not occur *1	Will not be erased	Will be restored
	pulse	Will occur *1	Will be erased	Will not be restored

*1 When [Pr. PC29.5 Absolute position counter warning [AL. 0E3.1] selection] is set to "0" (disabled), [AL. 0E3.1] will not occur and the home position will not be erased. However, if "0" is set while the unit is other than "degree", the current position will not be restored correctly after the power is cycled. As this will result in an incorrect current position value, set [Pr. PC29.5] to "1" (enabled).

Restrictions

The following shows restrictions on when [Pr. PT85.0] is set to "1".

- This function cannot be used in the linear servo motor control mode, or fully closed loop control mode. Setting [Pr. PT85.0] to"1" in these modes triggers [AL. 037 Parameter error].
- The scale measurement function cannot be used. When the scale measurement function is enabled, setting [Pr. PT85.0] to "1" triggers [AL. 037 Parameter error].
- This function can be used only in the cyclic position mode (csp) and homing mode (hm). The mode cannot be switched to other control modes.
- Set values in [Pr. PA06 Electronic gear numerator] and [Pr. PA07 Electronic gear denominator] so that the numerator (m) after reducing the following equation is less than 16384. If "m" is 16384 or more, [AL. 037 Parameter error] will occur.

$$\frac{\text{Unit} \times \text{cmx}}{\text{fbpm} \times \text{cdv}} = \frac{m}{n} \quad m < 16384$$

Unit: 2^{32} (4294967296)

cmx: Electronic gear numerator ([Pr. PA06])

cdv: Electronic gear denominator ([Pr. PA07])

fbpm: Servo motor encoder resolution

Ex.

Setting 2^{26} (67108864) for the encoder resolution and 48:1 for the electronic gear

$$\frac{4294967296 \times 48}{67108864 \times 1} = \frac{3072}{1} \quad 3072 < 16384$$

- When [Pr. PT85.0] is changed while the absolute position detection system is enabled, perform homing again. If homing is not performed, [AL. 090.5 Homing incomplete warning] occurs at the start of an operation.
- Do not rotate the motor 2^{32} (4294967296) [pos units] or more in the forward or reverse rotation direction during power-off. Doing so will cause inaccurate absolute position restoration after the power is turned on.
- LSP (Forward rotation stroke end) and LSN (Reverse rotation stroke end) cannot be used. When the infinite feed function is enabled, LSP and LSN will turn on automatically.
- When the infinite feed function is enabled, the home position will be updated automatically. When the home position is updated, [Position actual value (Obj. 6064h)] will not change, but ABS data in MR Configurator2 will show values after the home position has been updated.

10 FSoE

10.1 Safety communication function

Point

When using the safety communication function, use ESI files in Module format.

Safety communication performed via EtherCAT is called FSoE (Safety Over EtherCAT), and the safety sub-function can be used by connecting to a controller that supports functional safety.

For details of the safety sub-function, refer to "FUNCTIONAL SAFETY" in the following manual.

MR-JET User's Manual (Function)

Safety PDO mapping

When using the safety communication function, use safety PDO ([Obj. 1608h]/ [Obj. 1A08h]).

The safety communication function can be used by adding safety PDO to [Sync Manager RxPDO assign (Obj. 1C12h)] and [Sync Manager TxPDO assign (Obj. 1C13h)].

The configuration of safety PDO is as follows. Refer to the following for details of mapping.

Page 20 PDO (Process Data Object) COMMUNICATION

Index	Sub Index	Description
1608h	00h	Number of entries (24h)
	01h	FSoE Master Command
	02h to 09h	SafeData[0]
	0Ah to 11h	SafeData[1]
	12h	FSoE Master CRC_0
	13h to 1Ah	SafeData[2]
	1Bh to 22h	SafeData[3]
	23h	FSoE Master CRC_1
	24h	FSoE Master ConnectionID
1A08h	00h	Number of entries (24h)
	01h	FSoE Slave Command
	02h to 09h	SafeData[0]
	0Ah to 11h	SafeData[1]
	12h	FSoE Slave CRC_0
	13h to 1Ah	SafeData[2]
	1Bh to 22h	SafeData[3]
	23h	FSoE Slave CRC_1
	24h	FSoE Slave ConnectionID

Safety parameter set

The safety communication function performs a parameter set (FSoE Connection Parameter Set) during the initial sequence of communication, and the parameters related to the safety communication are transferred from the controller to the slave. For details, refer to the following manual.

MR-JET-G-N1 User's Manual (Object Dictionary)

The following shows the data to be transferred by the parameter set.

Description	Supported object
Length of Communication Parameter	Communication Parameter Length (Obj. E901h: 07h)
Watchdog Time	Watchdog Time (Obj. E901h: 04h)
Length of Application Parameter	Application Parameter Length (Obj. E901h: 08h)

Startup

Configuration

The following figure shows a configuration example.

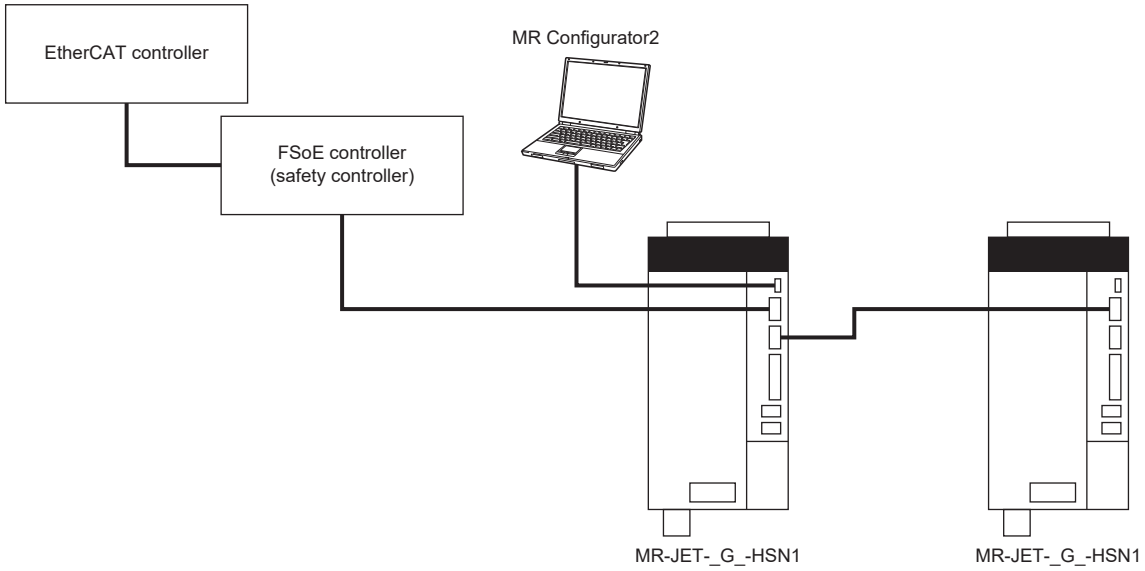

Startup procedure

Point

- Use ESI files that support the Module format.
- Before connecting with the controller, set the functional safety parameters of the servo amplifier. If a network is automatically detected when [Pr. PSA01.1 Input mode selection] is set to "0" (safety sub-function control by input device), FSoE may not be properly configured on the controller side.

■Parameter settings

• [Pr. PSA01.0 Safety sub-function activation setting]

Set "1" (enabled) after checking the setting of each functional safety parameter and confirming that there are no errors.

• [Pr. PSA01.1 Input mode selection]

Set "1" (safety sub-function control by network).

• [Pr. PSC07 FSoE Address setting]

Set the FSoE Address of FSoE Slave within the range of 1 to 65355. If [Pr. PSA01.0] is set to "0" when [Pr. PSA01.0] is "1" and [Pr. PSC01.1] is "1", [AL. 537.2 Parameter combination error A (safety sub-function)] occurs.

■EtherCAT controller settings

1. ESI file installation

Refer to the following.

☞ Page 52 ESI file installation

2. Node address setting

Refer to the following.

☞ Page 52 Node address setting

3. Communication setting

Refer to the following.

☞ Page 53 Communication setting

4. Mapping settings

Refer to the following. Set the safety PDO mapping in addition to the normal PDO mapping.

☞ Page 53 Mapping settings

Safety sub-function control by network

■Outline

Input devices cannot be used for safety sub-function control by network.

The following shows the configuration of process data for safety communication via EtherCAT communication. The safety sub-function can be controlled using the dedicated input/output signal assigned to SafeData[n].



To use the safety communication function through EtherCAT communication, assign [9th Receive PDO Mapping (Obj. 1608h)] and [9th Transmit PDO Mapping (Obj. 1A08h)] to [Sync Manager RxPDO assign (Obj. 1C12h)] and [Sync Manager TxPDO assign (Obj. 1C13h)]. For details of each object, refer to the following manual.

📖MR-JET-G-N1 User's Manual (Object Dictionary)

Safety sub-function control by network has the following characteristics.

• Transmission of each function command input via a network

The following commands can be transmitted via a network.

Controller to servo amplifier			
SafeData[n]	**Bit**	**Input command**	**Description**
SafeData[0]	0	STOC (STO command)	0: The STO function of the servo amplifier is activated and the energy supply is shut off. 1: The STO status is canceled and normal operation resumes.
	1	SS1C (SS1 command)	0: The SS1 function is activated. 1: The SS1 function is canceled.
	2	Not available	—
	3	Not available	Set to "0".
	4		
	5	SDIPC (SDIP command)	0: The SDIP function is activated. 1: The SDIP function is canceled.
	6	SDINC (SDIN command)	0: The SDIN function is activated. 1: The SDIN function is canceled.
	7	Error Ack (Error clear command)	0 → 1: Cancellation of errors is requested.
SafeData[1]	0	SLS1C (SLS1 command)	0: The SLS1 function is activated. 1: The SLS1 function is canceled.
	1	SLS2C (SLS2 command)	0: The SLS2 function is activated. 1: The SLS2 function is canceled.
	2	SLS3C (SLS3 command)	0: The SLS3 function is activated. 1: The SLS3 function is canceled.
	3	SLS4C (SLS4 command)	0: The SLS4 function is activated. 1: The SLS4 function is canceled.
	4	Not available	—
	5	SLT1C (SLT1 command)	0: The SLT1 function is activated. 1: The SLT1 function is canceled.
	6	SLT2C (SLT2 command)	0: The SLT2 function is activated. 1: The SLT2 function is canceled.
	7	SLT3C (SLT3 command)	0: The SLT3 function is activated. 1: The SLT3 function is canceled.

Controller to servo amplifier			
SafeData[n]	**Bit**	**Input command**	**Description**
SafeData[2]	0	SLT4C (SLT4 command)	0: The SLT4 function is activated. 1: The SLT4 function is canceled.
	1	Not available	Set to "0".
	2		
	3		
	4		
	5		
	6		
	7		
SafeData[3]	0	Not available	Set to "0".
	1		
	2		
	3		
	4		
	5		
	6		
	7		

• Feedback of various function outputs via a network

STOS (STO output), SSMS (SSM output), etc. can be transmitted via a network.

Servo amplifier to controller			
SafeData[n]	**Bit**	**Function output**	**Description**
SafeData[0]	0	STOS (STO output)	0: Indicates that the STO status has been canceled. 1: Indicates that the STO function is activated and the energy supply has been shut off.
	1	SSMS (SSM output)	0: Indicates that the servo motor speed exceeds the set SSM speed. (Off when the SSM function is disabled.) 1: Indicates that the servo motor speed is equal to or less than the set SSM speed.
	2	Not available	—
	3		
	4		
	5		
	6		
	7	Error (Error status)	0: Indicates that no error is occurring. 1: Indicates that an error is occurring.
SafeData[1]	0	SS1S (SS1 output)	0: Indicates that the SS1 function is not activated. 1: Indicates that the SS1 function is activated.
	1	Not available	—
	2	SDIPS (SDIP output)	0: Indicates that the SDIP function is not activated. 1: Indicates that the SDIP function is activated.
	3	SDINS (SDIN output)	0: Indicates that the SDIN function is not activated. 1: Indicates that the SDIN function is activated.
	4	SLS1S (SLS1 output)	0: Indicates that the SLS1 function is not activated. 1: Indicates that the SLS1 function is activated.
	5	SLS2S (SLS2 output)	0: Indicates that the SLS2 function is not activated. 1: Indicates that the SLS2 function is activated.
	6	SLS3S (SLS3 output)	0: Indicates that the SLS3 function is not activated. 1: Indicates that the SLS3 function is activated.
	7	SLS4S (SLS4 output)	0: Indicates that the SLS4 function is not activated. 1: Indicates that the SLS4 function is activated.
SafeData[2]	0	SBCS (SBC output)	0: Indicates that the STO status has been canceled and the energy supply to the electromagnetic brake has not been shut off. 1: Indicates that the STO function is activated and the energy supply to the electromagnetic brake has been shut off.
	1	Not available	—
	2	SLT1S (SLT1 output)	0: Indicates that the SLT1 function is not activated. 1: Indicates that the SLT1 function is activated.
	3	SLT2S (SLT2 output)	0: Indicates that the SLT2 function is not activated. 1: Indicates that the SLT2 function is activated.
	4	SLT3S (SLT3 output)	0: Indicates that the SLT3 function is not activated. 1: Indicates that the SLT3 function is activated.
	5	SLT4S (SLT4 output)	0: Indicates that the SLT4 function is not activated. 1: Indicates that the SLT4 function is activated.
	6	Not available	—
	7		
SafeData[3]	0	Not available	—
	1		
	2		
	3		
	4		
	5		
	6		
	7		

■FSoE Watchdog Time

For safety sub-function control by network, set FSoE Watchdog Time.

FSoE Watchdog Time is a time-out value for safety process data and it affects the determination of the safety reaction time. By increasing the value, communication timeouts are less likely to occur.

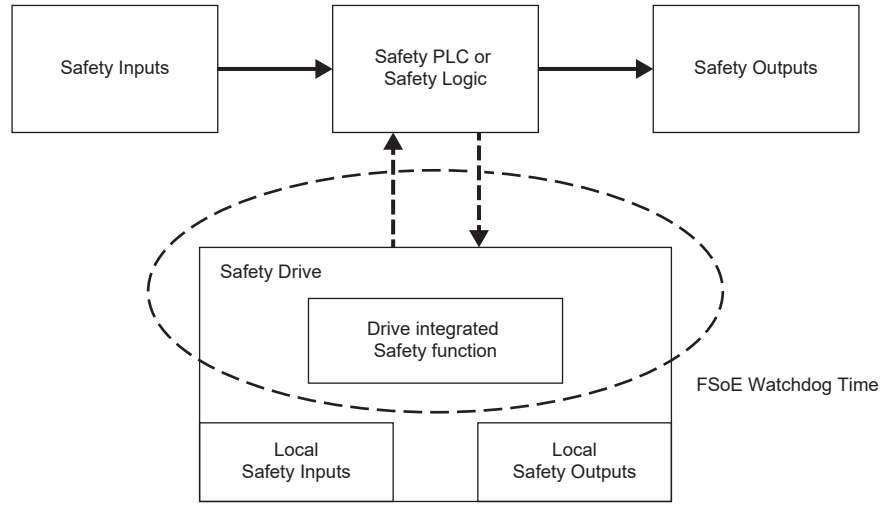

TRef + TCom × 4 = 16 (Unit: ms) is the minimum configurable value for FSoE Watchdog Time.

Set the FSoE Watchdog Time on the controller, taking into account the response time of the controller used.

Element	Description
TRef	Safety refresh response processing time 15.0 ms
TCom	Network response time Communication cycle: 250 µs or longer

FSoE Watchdog Time set in [Watchdog Time (Obj. E901h: 04h)] can be checked on the servo amplifier.

■Functional safety parameter setting

To perform safety monitoring using safety communications, set the following functional safety parameter.

Functional safety parameter	Name
PSC07	FSoE Address setting

- FSoE Address setting

Set the value used to identify FSoE Slave. Ensure that FSoE Slave has a unique value.

Match the value of FSoE Master with this functional safety parameter. If it is set to a non-matching value, [AL. 584.1 FSoE Address mismatch error (safety sub-function)] occurs.

MEMO

PART 2 PROFINET

11 FUNCTIONS AND CONFIGURATION

12 STARTUP

13 PROFINET communication

14 PROFIdrive PROFILE

15 CiA 402 DRIVE PROFILE

16 PROFIdrive Parameter

11 FUNCTIONS AND CONFIGURATION

11.1 Outline

Point

When using PROFINET, set [Pr. PN13.0-3 Network protocol setting] to "1000h".

PROFINET is an automation communication standard defined by PROFIBUS & PROFINET International (PI).
The MR-JET-_G_-_N1 servo amplifier operates as an IO Device compliant with the PROFINET standard. It also supports two cyclic communication formats: the PROFIdrive profile and the CiA 402 drive profile.
The supported profiles and control methods are as follows:

PROFIdrive PROFILE

The servo amplifier supports the following operation method of Application Class (AC).

AC	Operation method	Remarks
1	Standard Drive	This is a mode to drive motors by receiving a target speed command or a target torque command in the communication with an IO Controller.

CiA 402 drive profile

The servo amplifier supports the following control modes.

Control mode	Symbol	Remarks
Profile position mode	pp	This is a positioning control mode to drive servo motors by receiving an end position command in the communication with a controller. Use an absolute position address or a relative position address for the command.
Profile velocity mode	pv	This is a control mode to drive servo motors by receiving a target speed command in the communication with a controller.
Profile torque mode	tq	This is a control mode to drive servo motors by receiving a target torque command in the communication with a controller.
Point table mode	pt	This is a control mode to drive servo motors according to commands, such as travel distance and speed, which are stored in the point table number specified via communication with a controller. This control mode is not in CiA 402 standard (Mitsubishi Electric original).
JOG operation mode	jg	This is a control mode where the servo motor speed is set to drive the servo motor manually via communication with a controller. This control mode is not in CiA 402 standard (Mitsubishi Electric original).
Homing mode	hm	This is a control mode to perform homing with the method specified by the controller.

Applicable controllers

When using the MR-JET-_G_-_N1 servo amplifier with PROFINET, the RJ71PN92 cannot be used. If you are considering using the MR-JET-_G_-_N1 servo amplifier in combination with the RJ71PN92, contact your local sales office.

11.2 Function list

This list explains the PROFINET- and PROFIdrive-related functions that apply across multiple devices or to the overall system.

Category	Subcategory	Function	Description	Detailed explanation
Network	Open network	PROFINET	This protocol supports the PROFINET communication.	☞ Page 69 Communication specifications
		PROFIdrive	This protocol supports PROFIdrive.	☞ Page 83 Acyclic communication
	Remote maintenance	Firmware update	This function allows devices to update their firmware via a network. For details, contact your local sales office.	—
	Profile	GSDML	A file written in XML format that contains information about the basic functions of the device. It includes communication options and available diagnosis functions.	☞ Page 71 STARTUP
Application function	File transfer	FTP server function	This function can read/write/delete data on a per-file basis using the FTP commands.	—

11.3 Communication specifications

The communication specifications are shown in the following table.

Item		Description	Remarks
PROFINET communication specifications		PROFINET IO V2.4	—
Physical layer		100BASE-TX	—
Communication connector		Two RJ45 ports (port 1, port 2)	—
Communication cable	Cable type	Category 5e or higher, (double shielded/STP) straight cable	—
	Standard	One of the following standards must be met. • IEEE802.3 100BASE-TX • ANSI/TIA/EIA-568-B (Category 5e)	
	Connector	RJ-45 shielded connector	
Network topology		Line, star, ring, or hybrid of these three topology types	—
Communication speed		100 Mbps (full duplex/half duplex)	—
Transmission distance between stations		Max. 100 m	—
Number of nodes		Compliance with the standard Ethernet specifications	The actual number of connected nodes depends on the IO controller specifications.
Byte order		Big Endian	—
Field bus devices		IO device with real-time (RT)	—
Cyclic Communication (Cyclic frame transmission) Cycle times		1 ms, 2 ms, 4 ms, 8 ms, 16 ms, 32 ms, 64 ms, 128 ms, 256 ms, 512 ms	—
PROFIdrive Parameter Access		Supported	—
Alarm/diagnosis		Supported	—
LED display		Network Status, Module Status, LINK/Activity (port 1, port 2)	—

11.4 Engineering software

The following explains the main purposes of the engineering software used in communication. For specific usages, refer to the manuals of the engineering software and controller.

Engineering software list

This list shows engineering software to be used.

Engineering software	Description
MR Configurator2	This software has the following functions: servo amplifier adjustment, monitor display, diagnosis, reading/writing of servo parameters, and test operation. These functions are performed using a personal computer. Parameter settings and test operation can also be performed via a controller. Settings, such as an IP address, stroke limit, absolute position detection system, and communication error detection time, are configured with this software.

12 STARTUP

For the startup procedures other than the network settings, refer to the following manual.
MR-JET-G-N1 User's Manual (Introduction)

Point

[Pr. PN13.0-3 Network protocol setting] is set to "0100h" (EtherCAT) by default. When using PROFINET, change [Pr. PN13.0-3] to "1000h" (PROFINET).
The setting value of [Pr. PN13.0-3] can be automatically changed by setting the servo amplifier to the network switching mode to detect PROFINET communication automatically. For details, refer to "Network protocol switching methods" in the following manual.
MR-JET-G-N1 User's Manual (Introduction)

12.1 Controller setting

Set up the controller by following its manual. An example set-up procedure is shown below.

1. GSDML file installation

Point

Use the latest GSDML file when setting up a controller. If the GSDML file is old, the latest functions may not be available, or control operation may not be performed. For the GSDML files usable with your servo amplifier, contact your local sales office.

Obtain the GSDML file for the servo amplifier and install it into the engineering software for controller project setting. For details on how to install, refer to the manual for the controller or engineering software to be used.
When the GSDML file is installed, the following devices are displayed and can be added to the controller project. Add the device corresponding to the machine model to the controller project and use it.

Device name on the engineering software	Model
MR-JET-G-N1	MR-JET-_G_-HSN1

2. Station name setting

Point

- The station name of the servo amplifier is set to " " (empty string) by default. Set a unique station name for the servo amplifier within the PROFINET network to be used.
- When the station name of the servo amplifier is changed, check that it matches the station name set in the controller project. If the station names do not match, connection to the controller cannot be established.

Set the controller project so that the station name of the device added to the controller project matches the station name of the servo amplifier.

• How to set the station name of the servo amplifier

The station name of the servo amplifier can be set using a controller or [Pr. NPD05 Name of Station]. For details on how to set the station name using a controller, refer to the manual for the controller.

For available character strings for the station name of the servo amplifier, refer to "[Pr. NPD05_Name of Station]" in the following manual.

MR-JET-G User's Manual (Parameters)

3. IP address setting

Point

- The IP address of the servo amplifier is set to "0.0.0.0" by default.
- When the IP address of the servo amplifier is changed, check that it matches the IP address set in the controller project. If the IP addresses do not match, connection to the controller cannot be established.
- If the IP address setting is configured in MR Configurator2, cycle the power and then connect to a PROFINET controller.

Set the controller project so that the IP address of the device added to the controller project matches the IP address of the servo amplifier.

• IP address setting of the servo amplifier

The IP address of the servo amplifier is determined by the rotary switch settings on the servo amplifier as follows.

Rotary switch	IP address setting value
00h	For manufacturer setting
01h	The IP address is set to "0.0.0.0" by default. If the IP address is set from either the controller or MR Configuration2, the set IP address is applied. When restored to the factory default settings, the IP address is set to "0.0.0.0".
02h to FEh	The fourth octet of the IP address set in [Pr. NPD02 IP Address] changes to the rotary switch setting value. When setting the IP address with rotary switches, set it in hexadecimal. The hexadecimal setting value is converted to decimal and set in the fourth octet.
FFh	For manufacturer setting

4. Telegram setting

For the device added to the controller project, change the telegram set for the submodule of the Drive Axis module to the telegram to be used.

The relationship between slots and axes is as follows.

Slot	Axis
1	A-axis

The following submodules are set for Drive Axis by default. Set the telegram to be used for the submodule as required.

Slot	Sub Slot	Assigned submodule	Remarks
1 to 3	1	Parameter Access Point	Cannot be changed.
	2	Telegram 1	Set the main telegram. For the supported main telegrams, refer to the following. ☞ Page 77 Supported telegram
	3	Empty submodule	Cannot be changed.
	4	Empty submodule	Cannot be changed.

Establishing the communication

Start communication with the controller, then confirm that "r_ _" (the "_ _" part is the fourth octet of the set IP address) appears on the 7-segment LED display.

Follow the manual for the controller to be used when starting communication.

Operating the servo motor

Operate the servo motor at the lowest speed possible by giving commands to the servo amplifier from the controller, and check whether the servo motor operates correctly.
The following is an example procedure for operation using Standard Telegram 1 and Telegram 202.

Example procedure for operation using Telegram 1

1. Servo parameter setting

Use MR Configurator2 to set [Pr. PT01.1 Speed/acceleration/deceleration unit selection] to "0" (r/min). After the setting, cycle the power of the servo amplifier.

2. Acceleration/deceleration time constant setting

Set the acceleration and deceleration time during the speed control.
Set ample acceleration and deceleration time at first to prevent sudden changes in speed, and check the operation status.
Acceleration and deceleration time can be set in milliseconds using the following servo parameters or via the PNU.

Item	Servo parameter	PNU
Acceleration time constant	[Pr. PT49 Speed acceleration time constant]	[Profile acceleration (PNU24707)]
Deceleration time constant	[Pr. PT50 Speed deceleration time constant]	[Profile deceleration (PNU24708)]

3. Connection to a controller

Set Telegram 1 for the servo amplifier in the controller project. After the setting, write the controller project to the controller.
Connect the controller to the servo amplifier and start communication using Telegram 1.

4. Servo-on

Set the control command issued from the controller in Setpoint PZD1 [STW1 (Controlword1 (PNU1051))], then change the internal state of the servo amplifier to the servo-on state.
For details of the servo amplifier internal states, refer to the following.
☞ Page 88 State transition

5. Starting servo motor operation

The servo motor is driven in speed control mode by specifying the desired speed command in Setpoint PZD2 [NSOLL_A (Speed setpoint (PNU1055))].

Example procedure for operation using Telegram 202

1. Connection to a controller

Set Telegram 202 for the servo amplifier in the controller project. After the setting, write the controller project to the controller. Connect the controller to the servo amplifier and start communication using Telegram 202.

2. Homing mode setting

Perform homing to perform operation in the profile position mode (pp). Set Setpoint PZD1 [Modes of operation (PNU24672)] to "6" (Homing mode), then confirm that Actual value PZD1 [Modes of operation display (PNU24673)] has changed to "6" (Homing mode).

3. Servo-on

Set the control command issued from the controller in Setpoint PZD2 [Controlword (PNU24640)], then change the internal state of the servo amplifier to the servo-on state.

For details of the servo amplifier internal states, refer to the following.

☞ Page 97 PDS state transition

4. Homing

Set a homing method in [Homing method (PNU24728)], then perform homing.

For details of homing, refer to "Homing mode (hm) and homing" in the following manual.

📖MR-JET User's Manual (Function)

5. Profile position mode setting

Confirm that homing is complete, then change the control mode to the profile position mode (pp). Set Setpoint PZD1 [Modes of operation (PNU24672)] to "1" (Profile position mode), then confirm that Actual value PZD1 [Modes of operation display (PNU24673)] has changed to "1" (Profile position mode).

6. Starting servo motor operation

The servo motor is driven in position control mode by specifying the position command in Setpoint PZD9.10 [Target position (PNU24698)].

Network disconnection procedure

To disconnect the network when stopping the operation of equipment, follow the procedure shown below.

1. Stop the servo motor.
2. Perform the following procedure to set the servo-off state.

• When using Telegram 1

Set the Off command in Setpoint PZD1 [STW1 (Controlword1 (PNU1051))]. For the Off command, refer to the following.

☞ Page 88 State transition

• When using Telegram 200, Telegram 202, and Telegram 203

Set the Shutdown command in Setpoint PZD2 [Controlword (PNU24640)]. For the Shutdown command, refer to the following.

☞ Page 97 PDS state transition

3. After confirming that the servo amplifier is in the servo-off state, set the controller to the STOP state.
4. Shut off the power of the servo amplifier and the controller.

12.2 Ethernet cable connection

Point

- Use a twisted pair cable (double shielded) compliant with Ethernet Category 5e (100BASE-TX) or higher as an Ethernet cable. The maximum cable length between nodes is 100 m.
- CN1B indicates port 1. CN1A indicates port 2.

It is recommended to connect an Ethernet cable leading to the controller or servo amplifier of the front axis to CN1B and an Ethernet cable leading to the servo amplifier of the rear axis to CN1A, respectively. When not using CN1A, do not connect anything.

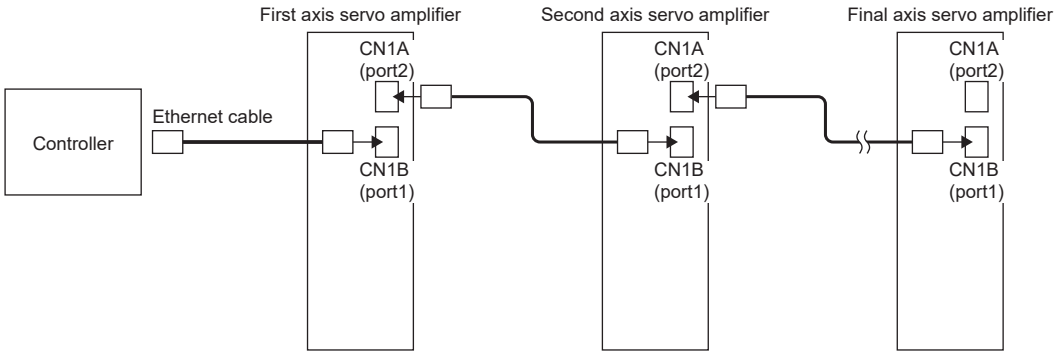

13 PROFINET communication

13.1 Cyclic communication

Cyclic communication is used to exchange process data in real time.
In Cyclic communication, command data and feedback data are transmitted and received as process data (PZD) between the controller and the servo amplifier at the specified communication cycle.
For the communication cycle that can be specified by Cyclic communication, refer to the following.
☞ Page 69 Communication specifications
The process data to be transmitted and received is determined by selecting a telegram using a controller. For details of the process data to be transmitted and received in each telegram, refer to the following.
☞ Page 78 Telegram mapping
In addition, for Telegram 202 and 203, users can freely set and use process data. Refer to the following for details.
☞ Page 79 Variable mapping

Supported telegram

For MR-JET-_G_-_N1 servo amplifiers, the following telegrams can be used.
For the process data of each telegram, refer to the following.
☞ Page 78 Telegram mapping
Select a telegram using the controller. For details of the setting method, refer to the manual of each controller.

• Main Telegram

Telegram	AC (ApplicationClass)	Name	Description
1	1	Standard Telegram 1	Telegram for applications that control the drive speed using a 16-bit Speed setpoint.
200	—	Telegram 200	Telegram for applications that use torque control based on the CiA 402 drive profile.
202	—	Telegram 202	Telegram for applications that switch among position control, speed control, torque control, and homing based on the CiA 402 drive profile. It supports variable mapping.
203	—	Telegram 203	Telegram for applications that use point tables, JOG operation, and homing based on the CiA 402 drive profile. It supports variable mapping.

Telegram mapping

The following shows the process data (PZD) to be mapped to each telegram. For details of the process data, refer to the following.

☞ Page 114 PROFIdrive Parameter

Standard Telegram 1

PZD	Setpoint		Actual value	
	Significance	Abbreviation	Significance	Abbreviation
1	Control word 1	STW1	Status word 1	ZSW1
2	Speed setpoint A	NSOLL_A	Speed actual value A	NIST_A

Telegram 200

PZD	Setpoint	Actual value
1	Controlword	Statusword
2	Target torque	Torque actual value

Telegram 202

PZD	Setpoint	Actual value
1	Modes of operation (8 bit)	Modes of operation display (8 bit)
	Reserved (8 bit)	Reserved (8 bit)
2	Controlword	Statusword
3	Control DI 1	Status DO 1
4	Control DI 2	Status DO 2
5	Control DI 3	Status DO 3
6	Target torque	Torque actual value
7	Torque slope	Digital inputs
8		
9	Target position	Position actual value
10		
11	Target velocity	Velocity actual value
12		
13	Velocity limit value	Following error actual value
14		
15	Profile velocity	Touch probe pos1 pos value
16		
17	Profile acceleration	Touch probe pos1 neg value
18		
19	Profile deceleration	Touch probe pos2 pos value
20		
21	Touch probe function	Touch probe pos2 neg value
22	—	
23	—	Touch probe status
24	—	—

Telegram 203

PZD	Setpoint	Actual value
1	Modes of operation (8 bit)	Modes of operation display (8 bit)
	Reserved (8 bit)	Reserved (8 bit)
2	Control word	Status word
3	Control DI 1	Status DO 1

PZD	Setpoint	Actual value
4	Control DI 2	Status DO 2
5	Control DI 3	Status DO 3
6	Target point table	Status DO 5
7	Profile velocity	Status DO 7
8		Torque actual value
9	Profile acceleration	Digital inputs
10		
11	Profile deceleration	Position actual value
12		
13	—	Velocity actual value
14	—	
15	—	Following error actual value
16	—	
17	—	Point demand value
18	—	Point actual value
19	—	M code actual value
20	—	—
21	—	—
22	—	—
23	—	—
24	—	—
25	—	—
26	—	—
27	—	—
28	—	—
29	—	—
30	—	—

Variable mapping

Telegram 202 and Telegram 203 support variable mapping.
The process data exchanged in the telegram can be customized using variable mapping.

Restrictions

The process data that can be mapped to Telegram 202 and Telegram 203 is the objects defined in the object dictionary. If an invalid Index is specified for mapping, [AL. 09E.B PDO Setting warning] occurs.
Process data is aligned on 2-byte boundaries. When mapping process data after a 1-byte process data item, set 8-bit padding (PNU0, Subindex 8) for alignment.
The maximum number of objects and the maximum number of bytes that can be mapped to Telegram 202 and Telegram 203 are as follows.

Item	Value
Telegram 202 Maximum size	Setpoint: 48 bytes Actual value: 48 bytes
Telegram 202 Maximum number of mappings	Setpoint: 24 Actual value: 24
Telegram 203 Maximum size	Setpoint: 60 bytes Actual value: 60 bytes
Telegram 203 Maximum number of mappings	Setpoint: 30 Actual value: 30

The following restrictions apply to the total number of bytes in the telegrams transmitted and received by the servo amplifier.

Setpoint [byte]	Actual value [byte]
60	60

Areas where no process data is mapped are not used. Do not reference areas where Actual value process data is not mapped.

Process data requiring mapping

The process data required for each mode is shown below.

■Setpoint

◎: Mapping required

○: Mapping recommended

—: Mapping not required

Process data (PNU)	Mode					
	pp	pv	tq	pt	jg	hm
Controlword (24640)	◎	◎	◎	◎	◎	◎
Control DI 1 (11521) Gain switching	○	○	—	○	○	—
Control DI 2 (11522) Proportional control	○	—	—	○	○	○
Control DI 3 (11523)	○	○	○	○	○	○
Target position (24698)	◎	—	—	—	—	—
Target velocity (24831)	—	◎	—	—	—	—
Target torque (24689)	—	—	◎	—	—	—
Profile velocity (24705)	○	—	—	—	○	—
Profile acceleration (24707)	○	○	—	—	○	—
Profile deceleration (24708)	○	○	—	—	○	—
Torque slope (24711)	—	—	○	—	—	—
Velocity limit value (11552)	—	—	○	—	—	—
Target point table (11616)	—	—	—	◎	—	—

■Actual value

◎: Mapping required

○: Mapping recommended

—: Mapping not required

Process data (PNU)	Mode					
	pp	pv	tq	pt	jg	hm
Statusword (24641)	◎	◎	◎	◎	◎	◎
Status DO 1 (11537)	○	○	○	○	○	○
Status DO 2 (11538)	○	○	○	○	○	○
Status DO 3 (11539)	○	○	○	○	○	○
Status DO 5 (11541)	—	—	—	○	○	—
Status DO 7 (11543)	—	—	—	○	○	—
Position actual value (24676)	○	○	○	○	○	○
Following error actual value (24820)	○	—	—	○	○	—
Velocity actual value (24684)	○	○	○	○	○	○
Torque actual value (24695)	○	○	○	○	○	○
Point actual value (11625)	—	—	—	○	○	—
M code actual value (11626)	—	—	—	○	○	—
Point demand value (11624)	—	—	—	○	○	—

Setting method

Set the following items from Device-specific parameters in the telegram setting.

Since the setting screen varies depending on the engineering software, refer to the manual of the engineering software.

The offset of the process data to be mapped is determined by the total size of the preceding process data entries, counted from n = 1.

Setting item *1	Value
PNU IN n	PNU and its Subindex of the process data to be mapped to Setpoint
PNU IN n Subindex	
PNU OUT n	PNU and its Subindex of the process data to be mapped to Actual value
PNU OUT n Subindex	

*1 "n" is an integer greater than or equal to 1.

Setting example

The following shows an example of configuring variable mapping.

Ex.

To add touch probe related objects ((1) to (6)) to Telegram 203, modify the process data as shown in the table below.

PZD	Setpoint	Actual value
1	Modes of operation (8 bit)	Modes of operation display (8 bit)
	Reserved (8 bit)	Reserved (8 bit)
2	Control word	Status word
3	Control DI 1	Status DO 1
4	Control DI 2	Status DO 2
5	Control DI 3	Status DO 3
6	Target point table	Status DO 5
7	Profile velocity	Status DO 7
8		Torque actual value
9	Profile acceleration	Digital inputs
10		
11	Profile deceleration	Position actual value
12		
13	Touch probe function (1)	Velocity actual value
14	—	
15	—	Following error actual value
16	—	
17	—	Point demand value
18	—	Point actual value
19	—	M code actual value
20	—	—
21	—	Touch probe 1 positive edge (2)
22	—	
23	—	Touch probe 1 negative edge (3)
24	—	
25	—	Touch probe 2 positive edge (4)
26	—	
27	—	Touch probe 2 negative edge (5)
28	—	
29	—	Touch probe status (6)
30	—	—

■Setpoint

Set the values for OUT11 and OUT11 Subindex as follows.

Leave the areas to which process data is not mapped unchanged (PNU 0, Subindex 0).

Setting item	Initial value	Setting value	Description
OUT1	24672	24672	PNU24672 and Subindex 0 are mapped (No change) ([Modes of operation (Obj. 6060h: 00h)])
OUT1 Subindex	0	0	
OUT2	0	0	8-bit padding for 2-byte alignment adjustment (No change)
OUT2 Subindex	8	8	
:	:	:	— (No change)
OUT10	24708	24708	PNU24708 and Subindex 0 are mapped (No change) ([Profile deceleration (Obj. 6084h: 00h)])
OUT10 Subindex	0	0	
OUT11	0	24760	PNU24760 and Subindex 0 are mapped (No change) ([Touch probe function (Obj. 60B8h: 00h)])
OUT11 Subindex	0	0	
OUT12	0	0	Empty area (No change)
OUT12 Subindex	0	0	
:	:	:	— (No change)

■Actual value

Set the values for IN17 to IN23 and IN17 Subindex to IN23 Subindex as follows.

Leave the areas to which process data is not mapped unchanged (PNU 0, Subindex 0).

Setting item	Initial value	Setting value	Description
IN1	24673	24673	PNU24673 and Subindex 0 are mapped (No change) ([Modes of operation display (Obj. 6061h: 00h)])
IN1 Subindex	0	0	
IN2	0	0	8-bit padding for 2-byte alignment adjustment (No change)
IN2 Subindex	8	8	
:	:	:	— (No change)
IN16	11626	11626	PNU11626 and Subindex 0 are mapped (No change) ([M code actual value (Obj. 2D6Ah: 00h)])
IN16 Subindex	0	0	
IN17	0	0	8-bit padding for 2-byte alignment adjustment
IN17 Subindex	0	8	
IN18	0	0	16-bit padding *1
IN18 Subindex	0	16	
IN19	0	24762	PNU24762 and Subindex 0 are mapped ([Touch probe 1 positive edge (Obj. 60BAh: 00h)])
IN19 Subindex	0	0	
IN20	0	24763	PNU24763 and Subindex 0 are mapped ([Touch probe 1 negative edge (Obj. 60BBh: 00h)])
IN20 Subindex	0	0	
IN21	0	24764	PNU24764 and Subindex 0 are mapped ([Touch probe 2 positive edge (Obj. 60BCh: 00h)])
IN21 Subindex	0	0	
IN22	0	24765	PNU24765 and Subindex 0 are mapped ([Touch probe 2 negative edge (Obj. 60BDh: 00h)])
IN22 Subindex	0	0	
IN23	0	24761	PNU24761 and Subindex 0 are mapped ([Touch probe status (Obj. 60B9h: 00h)])
IN23 Subindex	0	0	
IN24	0	0	Empty area (No change)
IN24 Subindex	0	0	
:	:	:	— (No change)

*1 This is an example of padding setting and does not need to be configured if padding is not used. Padding can be used, for example, to adjust the offset position of process data. To configure padding, set the PNU to "0" and specify the size in bits in Subindex. The supported sizes are 8 bits, 16 bits, and 32 bits.

13.2 Acyclic communication

Unlike Cyclic communication, Acyclic communication transfers data only when an explicit request, such as a parameter read or write operation, is issued.

PROFIdrive Parameter Access

Acyclic communication allows the controller to access the PROFIdrive parameters of the servo amplifier. For the PROFIdrive parameters of the servo amplifier, refer to the following.

☞ Page 114 PROFIdrive Parameter

PROFIdrive parameter read and write operations are performed via Record data (Index: B02Eh).

First, transmit "Write Request" containing "PROFIdrive Parameter Request" to the target "Record data" from the controller. If "Write Response" indicates an error, send "Write Request" again. If "Write Response" indicates successful completion, transmit "Read Request" to the target "Record data" to receive "Read Response" containing "PROFIdrive Parameter Response". If the servo amplifier is processing the parameter, an error response will be returned. In this case, transmit "Read Request" again.

When transmitting consecutive "PROFIdrive Parameter Request" to the same target, retrieve "PROFIdrive Parameter Response" for the previously sent "PROFIdrive Parameter Request".

For how to transmit and receive "Write Request" and "Read Request", refer to the manual for the controller or engineering software to be used.

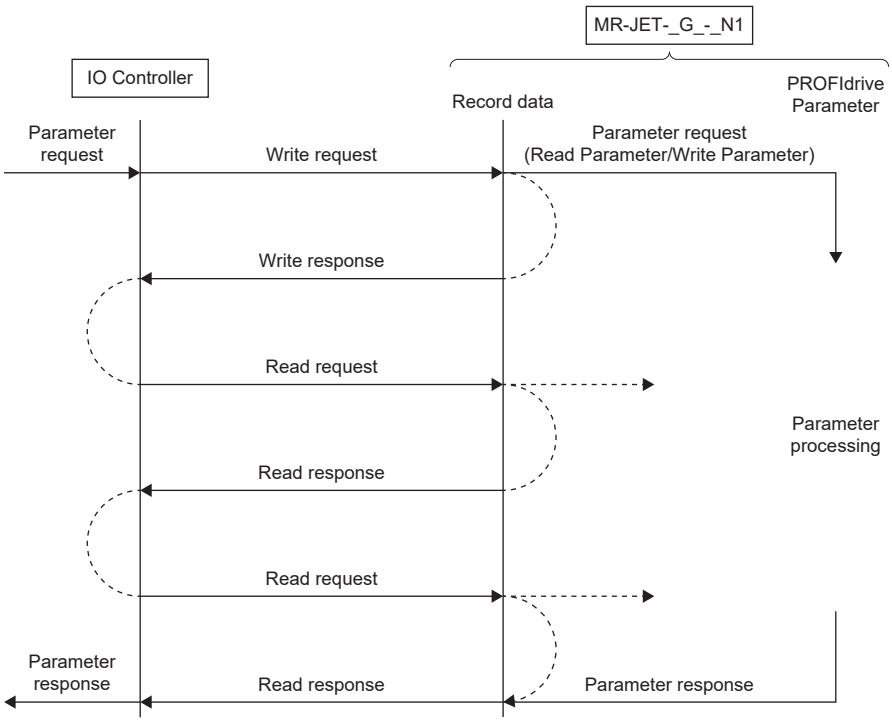

PROFIdrive Parameter Request/Response

The following shows the block structure of "PROFIdrive Parameter Request" and "PROFIdrive Parameter Response".
The total size of the "PROFIdrive Parameter Request" and "PROFIdrive Parameter Response" blocks, including Request header/Response header, must not exceed 240 bytes.

■PROFIdrive Parameter Request

The block structure is shown below.
When reading a parameter, set "Request ID" to "0x01" (Request parameter).
When writing a parameter, set "Request ID" to "0x02" (Change parameter).

Block Definition	Field	Size [byte]	Value
Request header	Request reference	1	0x01-0xFF
	Request ID	1	0x01: Request parameter 0x02: Change parameter
	Axis No./DO-ID	1	0x00 *1
	No. of parameters	1	0x01-0x27: number of parameters = i
1st Parameter address	Attribute	1	0x10: Value 0x20: Description
	No. of elements	1	0x00-0xEA: number of elements *3
	Parameter number	2	0x0000-0xFFFF: PROFIdrive Parameter number (PNU)
	Subindex	2	0x0000-0xFFFF: Subindex
i th Parameter address	…	…	…
1st Parameter Value *2	Format	1	☞ Page 85 Format
	No. of values	1	0x00-0xEA: number of values
	Values	—	Write value
i th Parameter Value *2	…	…	…

*1 The value of this field is invalid.
*2 The "Parameter Value" block is used only when Request ID is set to 0x02 (Change parameter).
*3 Specify the number of array elements to be accessed. For non-array parameters, set this value to "0".

■PROFIdrive Parameter Response

The block structure is shown below.
When "Response ID" is set to "0x80" (service not supported), review "Request ID" of Parameter Request.
When "Response ID" is set to "0x81" (Request parameter NG) or "0x82" (Change parameter NG), check each error value and review the contents in Parameter Request.

Block Definition	Field	Size [byte]	Value
Response header	Request reference	1	Request reference mirrored
	Response ID	1	Normal response 0x01: Request parameter OK 0x02: Change parameter OK Error response 0x80: service not supported 0x81: Request parameter NG 0x82: Change parameter NG
	Axis No./DO-ID	1	Axis No./DO-ID mirrored
	No. of parameters	1	0x01-0x27: number of parameters = i
1st Parameter Value *1	Format	1	☞ Page 85 Format
	No. of values	1	0x00-0xEA: number of values
	Values or Error values	1…253	Normal state: Read value Error state: ☞ Page 85 Error number
i th Parameter Value *1	…		…

*1 Use the "Parameter Value" block when Request ID is set to 0x01 (Request parameter) or when an error response with Response ID set to 0x81 or 0x82 is returned.

■Format

The value in the format field to be transmitted and received in "PROFIdrive Parameter Request" and "PROFIdrive Parameter Response" corresponds to the data type of PROFIdrive Parameter to be accessed. The format field values corresponding to each data type are shown below.

Value	Data type
0x01	Boolean
0x02	Signed8
0x03	Signed16
0x04	Signed32
0x05	Unsigned8
0x06	Unsigned16
0x07	Unsigned32
0x08	FloatingPoint32
0x09	VisibleString
0x0A	OctetString
0x37	Signed64
0x38	Unsigned64
0x40	Zero
0x41	Byte
0x42	Word
0x43	Double word
0x44	Error
0x71	N2
0x72	N4
0x73	V2
0x7B	X2
0x7C	X4

■Error number

When "Response ID" of "PROFIdrive Parameter Response" returns an error, store the following "Error No." (Unsigned16) in the "Values or Error values" field.

Error No.	Name	Description
0x0000	Impermissible parameter number	Access to a non-existent PROFIdrive Parameter
0x0001	Parameter value cannot be changed	Writing to a non-writable PROFIdrive Parameter
0x0002	Low or high limit exceeded	Value out of range
0x0003	Faulty subindex	Access to a non-existent Subindex
0x0004	No array	Access to PROFIdrive Parameter without Subindex
0x0005	Incorrect data type	Data type mismatch
0x0007	Description element cannot be changed	Modification of non-changeable description element
0x000F	No text array available	Text element array does not exist
0x0011	Request cannot be executed because of operating state	Access restrictions depending on operating state
0x0014	Value impermissible	Modification of PROFIdrive Parameter with a value that is not permitted
0x0015	Response too long	The response exceeds the maximum transmission size.
0x0016	Parameter address impermissible	Combination of invalid value, invalid number of elements, and invalid PNU or Subindex
0x0017	Illegal format	Invalid format of PROFIdrive Parameter Request
0x0018	Number of values are not consistent	Mismatch between the numbers of elements in the write request and parameter
0x0019	Axis/DO nonexistent	Access to a non-existent axis
0x0021	Service not supported	Invalid request ID
0x00FF	Attempt to read to a write only parameter	A write-only parameter is read.

Reset To Factory

Point

Executing "Reset To Factory" writes data to the non-volatile memory. The memory area of the servo amplifier has a limited service life. Therefore, do not use this function frequently.

Executing "Reset To Factory" can reset the parameters to the factory default settings. For how to operate "Reset To Factory", refer to the manual for the controller or engineering software to be used.

The factory reset functions supported by the servo amplifier are as follows.

Reset Option	Description
2	Restores the communication settings (station name and IP address-related settings) to the factory default settings. • The station name is changed to " " (an empty string). • The IP address, subnet mask, and default gateway are changed to "0.0.0.0".
8	Restores the communication settings, servo parameters, point table, and network parameters to the factory default settings. • Software reset is performed. • The station name is changed to " " (an empty string). • The IP address, subnet mask, and default gateway are changed to "0.0.0.0". • The servo parameters are initialized. • The point table is initialized. • The network parameters are initialized. • The functional safety parameters are not initialized. *1

*1 Initialization of the functional safety parameters can be performed using "Initialize Password" in MR Configurator2. Refer to "Setting functional safety parameters" in the following manual.
MR-JET User's Manual (Function)

PROFINET Alarm

Point

Do not use PROFINET Alarm to detect a servo motor stop. When an error occurs in the servo amplifier, an alarm or warning is generated. However, the servo amplifier sends PROFINET Alarm only when an alarm occurs. Therefore, even if the servo motor stops due to a warning, the servo amplifier does not send PROFINET Alarm.

When an error occurs in the servo amplifier, the following PROFINET Alarm is sent to the controller.

Channel Error Type	Meaning	Occurrence condition	Troubleshooting
0x0100	Manufacture specific	An alarm occurred.	Check the alarm number and remove the causes of the alarm or warning according to the following manual. MR-JET User's Manual (Troubleshooting)

14 PROFIdrive PROFILE

14.1 Outline

This chapter describes the PROFIdrive Drive Profile standards and subsets for the functions unique to the MR-JET-_G_-_N1 servo amplifier. Each function can be controlled by setting the PROFIdrive parameter via the network. For the basic functions and advanced functions of the MR-JET-_G_-_N1 servo amplifier, refer to the following manual.

📖MR-JET User's Manual (Function)

14.2 State transition

General State Diagram

The internal state of the servo amplifier is managed by the state transition defined by PROFIdrive.
The transition conditions are shown in the following diagram (General State Diagram). After establishing connection to the controller, set Control word 1 bit 10 (Control By PLC) to "1" (PLC enabled). The controller will then send a command (set Control word 1) and control the status.
Once the state transitions from "Switching On Inhibited", which is right after turning on the power supply, to "Operation", the servo motor becomes ready to operate.
Setting "Control word 1" enables control of the state transitions.

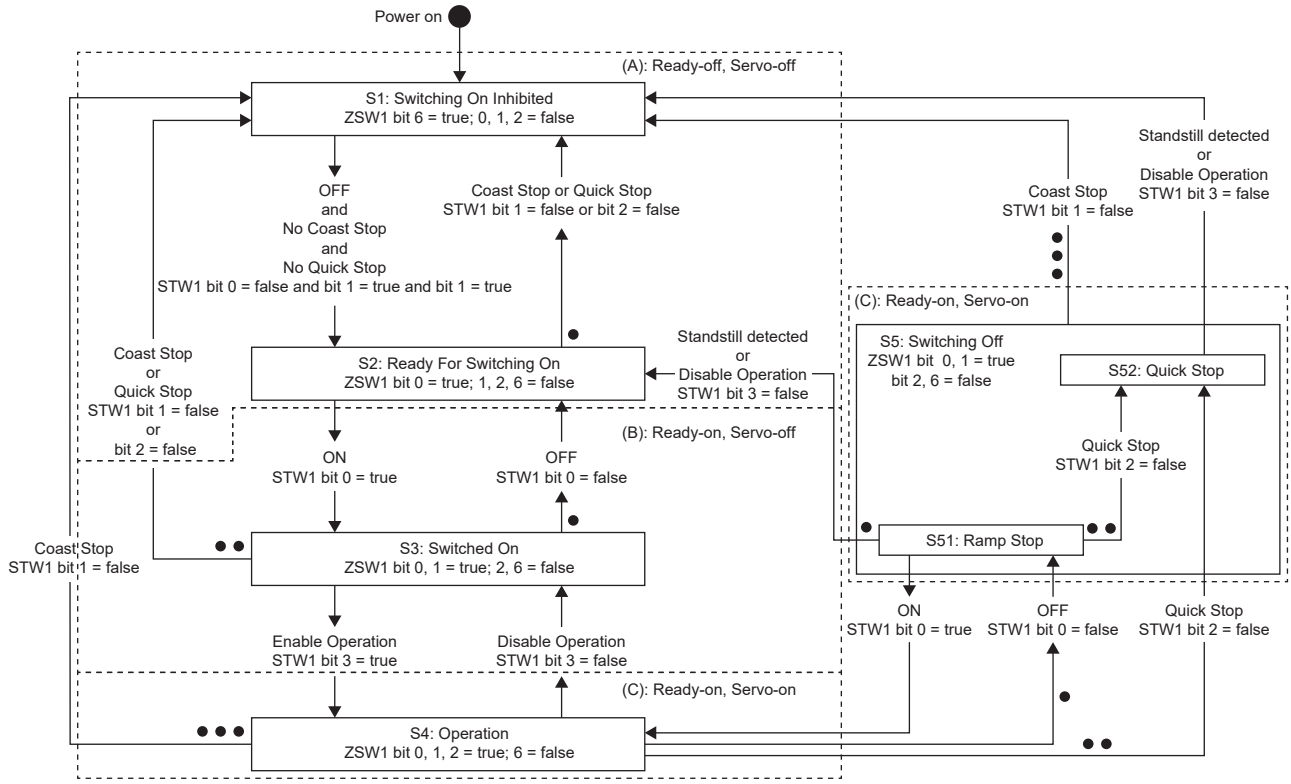

- ● indicates the priority. A greater number of ● symbols indicate a higher priority.
- "Standstill detected" indicates the motor stop (zero speed) state.

When an alarm occurs, bit 3 of Status word 1 becomes "1" (Fault Present).
When bit 3 of Status word 1 is "1", the state transition from "Switching On Inhibited" cannot be performed.
To resume operation, eliminate the cause of the alarm, and then either cycle the servo amplifier power supply or set "fault present" to "0" using Fault Acknowledge.

Warning

Some warnings cause the state to transition to "S1: Switching On Inhibited", "S2: Ready For Switching On", or "S52: quick stop" when the warning occurs to ensure safety, and the servo motor is automatically stopped. Warnings subject to automatic stop are indicated as "SD", "EDB", or "DB" in the motor stop method column of "List of alarm No./warning No." in the following manual.

📖MR-JET User's Manual (Troubleshooting)

In this case, Status word 1 Bit 7 (Warning Present) will be "1", however, the servo motor will not follow commands.

To resume operation, eliminate the cause of the warning, and then follow the normal startup procedure.

14.3 Control word

By rewriting Control word 1 and other parameters from the controller, commands can be given to switch states and control other functions provided by the servo amplifier.

control word 1

Bit	Name	Setting value	Description	Remarks
0	ON/OFF	0	OFF1	Executes ON/OFF. ☞ Page 88 State transition
		1	ON	Brings the servo amplifier into the ready-on state. When bit 3 is set to 1, the servo amplifier enters the servo-on state.
1	Coast Stop	0	Coast Stop (OFF2) enabled	Enables/disables Coast Stop. ☞ Page 88 State transition
		1	Coast Stop (OFF2) disabled	
2	Quick Stop	0	Quick Stop (OFF3) enabled	Enables/disables Quick Stop. ☞ Page 88 State transition
		1	Quick Stop (OFF3) disabled	
3	Enable Operation	0	Disable Operation	Enables/disables Enable Operation. ☞ Page 88 State transition
		1	Enable Operation	
4	The contents differ depending on the telegram type. For details, refer to each telegram.			
5				
6				
7	Fault Acknowledge *1	0 → 1	Fault Acknowledge	Executes "Fault reset" to clear the resettable alarm.
10	Control By PLC	0	Control by PLC disabled	Set whether to accept the command from PLC.
		1	Control by PLC enabled	
11	The contents differ depending on the telegram type. For details, refer to each telegram.			
12				
13				
14				
15				

*1 To prevent commands from being missed during communication errors, when clearing an alarm, keep Fault Acknowledge with bit 7 set to "1" for the time specified below according to the communication cycle. After turning on bit 7, turn off bit 7.
When the communication cycle is less than 5 ms: 10 ms
When the communication cycle is 5 ms or more: Period which is twice the communication cycle
The above periods are specified to prevent the Fault Acknowledge command from being missed if a communication loss occurs.

14.4 Status word

The servo amplifier state machine and other drive states are notified to the controller through Status word 1 and other signals.

Status word 1

Bit	Name	Setting value	Description	Remarks
0	Ready To Switch On	1	Ready for ready-on	Indicates that preparation for ready-on is complete. ☞ Page 88 State transition
1	Ready To Operate	1	Ready-on	Indicates that the servo amplifier is in the ready-on state. ☞ Page 88 State transition
2	Operation Enabled	1	Motor drive start	Indicates that the motor is operating in response to a command.
3	Fault present	1	Fault detection	The bit turns on when an alarm occurs.
4	Coast Stop Not Activated	1	Coast Stop disabled	Indicates that Coast Stop is disabled. ☞ Page 88 State transition
5	Quick Stop Not Activated	1	Quick Stop disabled	Indicates that Quick Stop is disabled. ☞ Page 88 State transition
6	Switching On Inhibited	1	Switching on inhibited enabled	Indicates that the servo amplifier is in the Switching on inhibited state.
7	Warning Present	1	Warning detection	The bit turns on when a warning is detected.
8	The contents differ depending on the telegram type. For details, refer to each telegram.			
9	Control requested	1	Control by PLC enabled	Indicates that commands from the host controller can be accepted.
10	The contents differ depending on the telegram type. For details, refer to each telegram.			
11				
12				
13				
14				
15				

14.5 Operating mode

The servo amplifier is controlled in the operating mode corresponding to the selected telegram. The correspondence between operating modes and telegrams is shown in the following table.

Operating mode	ApplicationClass	Telegram
PROFIdrive Speed Control Mode	1	1
Manufacturer-specific Control Mode	—	200 *1
	—	202 *1
	—	203 *1

*1 "control word 1" and "status word 1" are not supported.

14.6 PROFIdrive Speed Control Mode

The speed is controlled using the PROFINET process data.

Standard Telegram 1

The following diagram shows the PROFIdrive parameters and Control word/Status word related to Standard Telegram 1.
For details of the PROFIdrive parameters other than Control word/Status word, refer to the following.

☞ Page 114 PROFIdrive Parameter

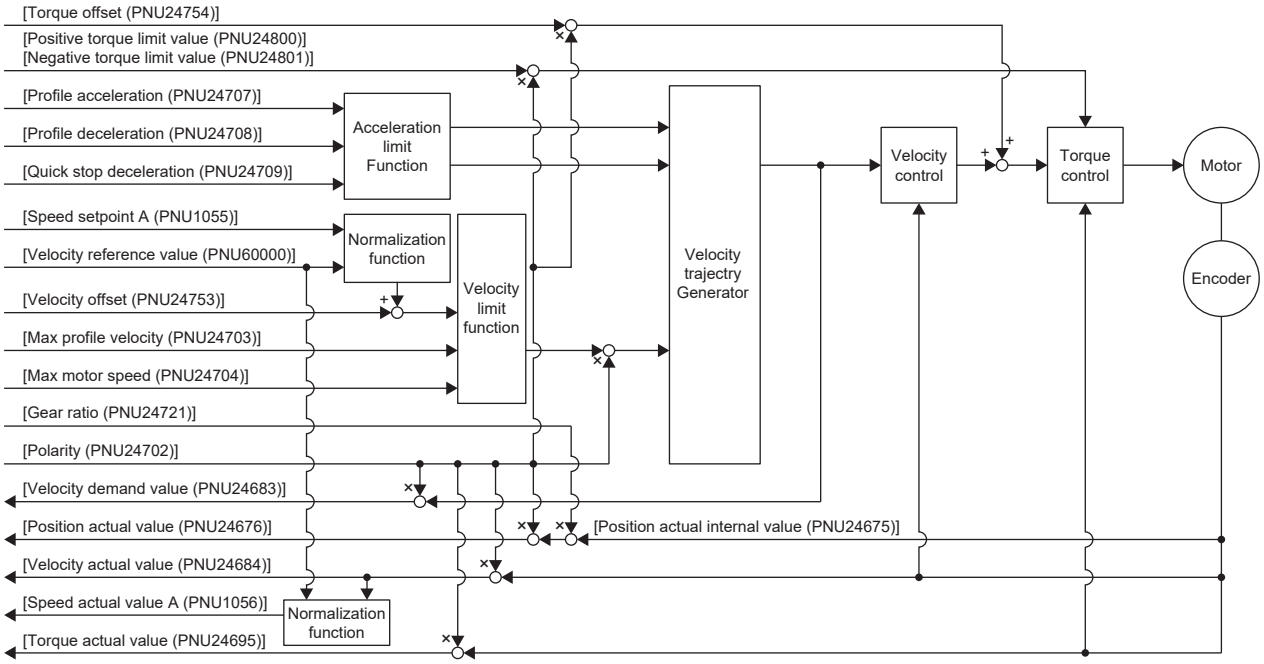

List of related PROFIdrive parameters

For details of the PROFIdrive parameters, refer to the following.

☞ Page 114 PROFIdrive Parameter

If the contents are divided by control mode in the User's Manual (Object Dictionary), refer to the contents for the profile velocity mode (pv).

PNU	Sub	Object	Name	Description
1051	—	VAR	Control word 1	Sets Control word 1.
1052	—	VAR	Status word 1	Returns Status word 1.
1055	—	VAR	Speed setpoint A	Sets the speed setting value A (16 bits).
1056	—	VAR	Speed actual value A	Returns the current speed A (16 bits).
24703	—	VAR	Max profile velocity	Maximum speed Unit: vel units
24704	—	VAR	Max motor speed	Servo motor maximum speed Unit: r/min, mm/s
24707	—	VAR	Profile acceleration	Acceleration at start of movement to target position Unit: acc units
24708	—	VAR	Profile deceleration	Deceleration at arrival to target position Unit: acc units
24709	—	VAR	Quick stop deceleration	Deceleration at deceleration to a stop with Quick stop Unit: acc units
24675	—	VAR	Position actual internal value	Current position Unit: Enc inc
24676	—	VAR	Position actual value	Current position Unit: pos units

PNU	Sub	Object	Name	Description
24683	—	VAR	Velocity demand value	Speed command (after trajectory generation) Unit: vel units
24684	—	VAR	Velocity actual value	Current speed Unit: vel units
24695	—	VAR	Torque actual value	Current torque Unit: 0.1% (with rated torque being 100%)
24722	0	ARRAY	Feed constant	Travel distance per revolution of an output shaft
	1		Feed	Travel distance setting Unit: pos units
	2		Shaft revolutions	Speed setting of the servo motor shaft Unit: rev
24800	—	VAR	Positive torque limit value	Torque limit value (forward) Unit: 0.1% (with rated torque being 100%)
24801	—	VAR	Negative torque limit value	Torque limit value (reverse) Unit: 0.1% (with rated torque being 100%)
24721	0	ARRAY	Gear ratio	Gear ratio
	1		Motor revolutions	Speed of the servo motor shaft (numerator)
	2		Shaft revolutions	Speed of the drive axis (denominator)
24702	—	VAR	Polarity	Polarity selection Bit 7: Position POL Bit 6: Velocity POL Bit 5: Torque POL
24685	—	VAR	Velocity window	Speed error threshold for judging Target reached Unit: vel units
24686	—	VAR	Velocity window time	Target reached judgment time Unit: ms
24687	—	VAR	Velocity threshold	Zero speed threshold for judging Speed Unit: vel units
24688	—	VAR	Velocity threshold time	Speed judgment time Unit: ms
24744	—	VAR	SI unit position	SI unit position It is automatically set in [Pr. PT01.2 Unit for position data].
24745	—	VAR	SI unit velocity	SI unit velocity Returns the SI unit velocity. It is automatically set in [Pr. PT01.2 Unit for position data].
24753	—	VAR	Velocity offset	Velocity offset Unit: Vel units
24754	—	VAR	Torque offset	Torque offset Unit: 0.1% (with rated torque being 100%)
60000	—	VAR	Velocity reference value	Sets the 100% speed value of the N2/N4 normalized speed signals (NIST, NSOLL).

Restrictions

- When using Telegram 1, set [Pr. PT01.1 Acceleration unit selection] to "0". When Telegram 1 is used with [Pr. PT01.1] set to "1", [AL. 09E.C Communication data combination warning] occurs.
- When using Telegram 1, set [Pr. PA01.0 Control mode selection] to "0" (Network standard mode). When Telegram 1 is used with [Pr. PA01.0] set to a value other than "0", [AL. 09E.C Communication data combination warning] occurs.

Control word 1

By changing [Control word 1 (PNU1051)], control commands can be given to the servo amplifier.

Bit	Name	Setting value	Description	Remarks
0	☞ Page 89 Control word			
1				
2				
3				
4	Enable Ramp Generator	0	Reset Ramp Generator	When the setting value is "1", the servo motor operates according to the command. When the setting value is "0", the servo motor decelerates with a deceleration time constant of 0.
		1	Enable Ramp Generator	
5	Unfreeze Ramp Generator	0	Freeze Ramp Generator	When the setting value is "1", the servo motor operates according to the command. When the setting value is "0", the acceleration/deceleration processing is stopped, and the servo motor speed is fixed at the current speed.
		1	Unfreeze Ramp Generator	
6	Enable Setpoint	0	Disable Setpoint	When the setting value is "1", the servo motor operates according to the command. When the setting value is "0", the speed command is set to "0", and the servo motor decelerates according to the deceleration time constant.
		1	Enable Setpoint	
7	☞ Page 89 Control word			
8				
9				
10				
11	Reserved			
12				
13				
14				
15				

When bit 4, 5, and 6 of Control word 1 are all set to "0" simultaneously, they are processed according to the following priority order.

Priority	Bit	Function name
High	Bit 4	Reset Ramp Generator
Medium	Bit 5	Freeze Ramp Generator
Low	Bit 6	Disable Setpoint

Status word 1

The control status can also be checked with [Status word 1 (PNU1052)].

Bit	Name	Setting value	Description	Remarks
0	☞ Page 90 Status word			
1				
2				
3				
4				
5				
6				
7				
8	Speed Error Within Tolerance Range	1	Speed deviation within the tolerance range	The bit is turned on when the deviation between the command data and the feedback value is within the tolerance range.
9	☞ Page 90 Status word			
10	f Or n Reached Or Exceeded	1	Speed command reached	The bit is turned on when the servo motor speed reaches the speed command value.
11	Reserved			
12				
13				
14				
15				

14.7 Manufacturer-specific Control Mode

The servo amplifier is controlled in a manufacturer-specific mode.

Telegram 200

The servo amplifier operates in profile torque mode (tq) of the CiA 402 drive profile.
Set [Pr. PA01.0 Control mode selection] to "0". The control mode at power-on is the profile torque mode (tq).
For the CiA 402 drive profile, refer to the following.
☞ Page 96 CiA 402 DRIVE PROFILE
For the profile torque mode, refer to the following.
☞ Page 113 Control mode

Telegram 202

The servo amplifier operates in profile position mode (pp), profile velocity mode (pv), profile torque mode (tq), and homing mode (hm) of the CiA 402 drive profile. The control mode at power-on is the profile position mode (pp).
Set [Pr. PA01.0 Control mode selection] to "0".
For the CiA 402 drive profile, refer to the following.
☞ Page 96 CiA 402 DRIVE PROFILE
For each control mode, refer to the following.
☞ Page 113 Control mode

Telegram 203

The servo amplifier operates in point table mode (pt), JOG operation mode (jg), and homing mode (hm) of the CiA 402 drive profile.
Set [Pr. PA01.0 Control mode selection] to "6". The control mode at power-on is the point table mode (pt).
For the CiA 402 drive profile, refer to the following.
☞ Page 96 CiA 402 DRIVE PROFILE
For each control mode, refer to the following.
☞ Page 113 Control mode

15 CiA 402 DRIVE PROFILE

Point

- The speed unit is set to "command unit/s" by default. To change the speed unit to "r/min", set [Pr. PT01.1 Speed/acceleration/deceleration unit selection] to "0" (r/min).

15.1 Outline

This chapter describes the CiA 402 drive profile standards and subsets for the functions unique to the MR-JET-_G_-_N1 servo amplifier. Each function can be controlled by using the object dictionary via the network from PROFIdrive Parameter. For the basic functions and advanced functions of the MR-JET-_G_-_N1 servo amplifier, refer to the following manual.

MR-JET User's Manual (Function)

The following table lists specifications of the drive profile for the MR-JET-_G_-_N1 servo amplifier.

Function name	Description	Reference
Control mode	Control of the modes such as the position mode, speed mode, and torque mode	☞ Page 113 Control mode
PDS state transition	Control method until the servo motor is ready to operate	☞ Page 97 PDS state transition
Controlword/Control DI	Control of the functions of the MR-JET-_G_-_N1 servo amplifier	☞ Page 100 Controlword/ Control DI
Statusword/Status DO	Monitoring of the functions of the MR-JET-_G_-_N1 servo amplifier	☞ Page 106 Statusword/Status DO

15.2 PDS state transition

The internal state of the servo amplifier is managed by the PDS state defined in the CiA 402 drive profile standard. The transition conditions of the PDS states are as follows. After the connection to the controller is established, the status is controlled by the controller transmitting commands (by setting Controlword) in accordance with the following table. Once the state transitions from "Not ready to switch on", which is right after turning on the power supply, to "Operation enabled", the servo motor becomes ready to operate.

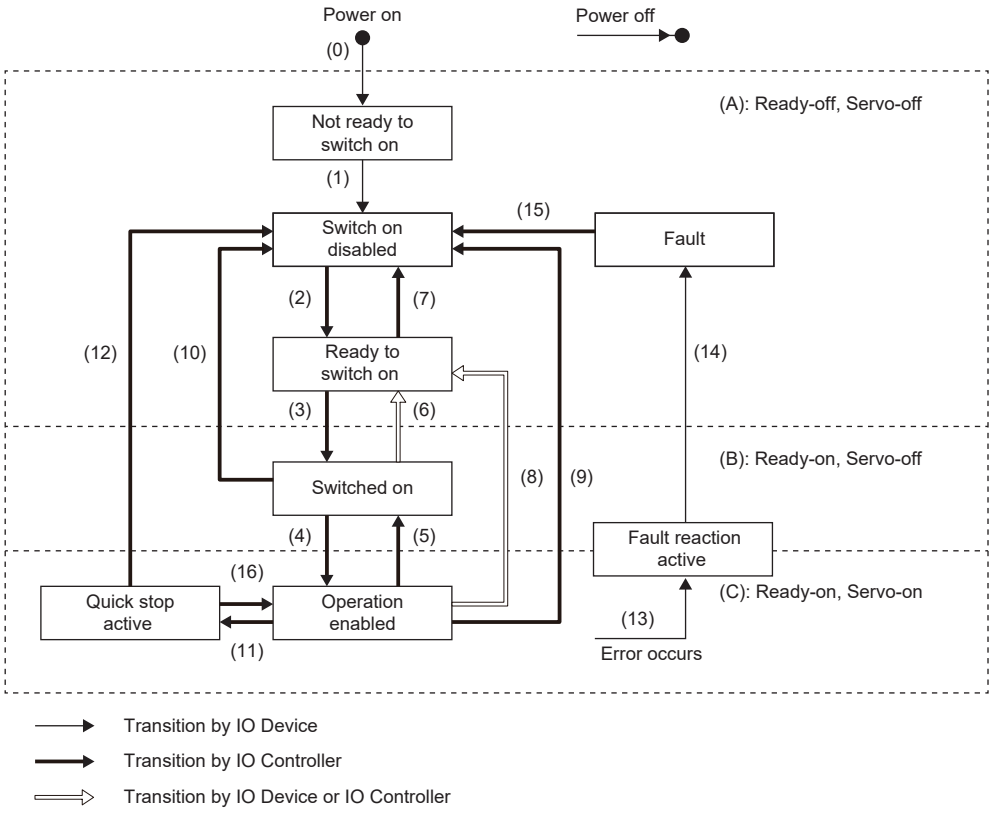

Setting Controlword enables control of the state transitions.

The following shows the PDS state transition events and operations.

Transition No.	Event	Operation
(0)	Control circuit power supply is turned on	Initialization
(1)	Transitions automatically when the control circuit power supply is turned on	Communication setting
(2)	Transitions with the "Shutdown" command from the client	-
(3)	Transitions with the "Switch On" command from the client	The dynamic brake is released.
(4)	Transitions with the "Enable Operation" command from the client	The operation becomes ready after servo-on.
(5)	Transitions with the "Disable Operation" command from the client Transitions when RD (Ready) is turned off	The operation is disabled after servo-off.
(6)	Transitions with the "Shutdown" command from the client	The dynamic brake operates.
(7)	Transitions with the "Disable Voltage" command or "Quick Stop" command from the client	-
(8)	(A) Transitions with the "Shutdown" command from the client (B) Transitions when the main circuit power supply is turned off (C) Transitions after becoming servo-off (see the transition No. (5) if RD is turned off at the same time)	The operation is disabled after servo-off and dynamic braking.
(9)	Transitions with the "Disable Voltage" command from the client	The operation is disabled after servo-off and dynamic braking.
(10)	Transitions with the "Disable Voltage" command or "Quick Stop" command from the client	The dynamic brake operates.
(11)	(A) Transitions with the "Quick Stop" command from the client (B) Transitions when the forced stop signal is turned off *1	Quick Stop starts.
(12)	(A) Transitions automatically after the completion of Quick Stop (when the value of [Quick stop option code (PNU24666)] is any of "1", "2", "3", or "4") (B) Transitions with the "Disable Voltage" command from the client after completion of "Quick Stop" (C) Transitions when the main circuit power supply is turned off (when the value of [Quick stop option code] is any of "5", "6", "7", or "8")	The operation is disabled after servo-off and dynamic braking.
(13)	Alarm occurrence	The processing at the alarm occurrence is executed.
(14)	Automatic transition	After the completion of the alarm occurrence processing, the operation is disabled by servo-off or dynamic braking.
(15)	Transitions with the "Fault Reset" command from the client	An alarm reset is performed. Resettable alarms are cleared.
(16)	Transitions with the "Enable Operation" command from the client (when the value of [Quick stop option code] is any of "5", "6", "7", or "8")	The operation becomes ready after Quick Stop is canceled.

*1 This event occurs when "1" (Quick stop active) is selected in [Pr. PF29.1 State selection with forced stop in progress].

Correspondence between the command bit setting and the PDS state

0: Off 1: On —: Either on/off can be used

Command	Bit setting of Controlword command					Transition No.
	Bit 7 Fault Reset	Bit 3 Enable Operation	Bit 2 Quick Stop	Bit 1 Enable Voltage	Bit 0 Switch On	
Shutdown	0	—	1	1	0	(2)/(6)/(8)
Switch On	0	0	1	1	1	(3)
Disable Voltage	0	—	—	0	—	(7)/(9)/(10)/(12)
Quick Stop	0	—	0	1	—	(7)/(10)/(11)
Disable Operation	0	0	1	1	1	(5)
Enable Operation	0	1	1	1	1	(4)
Fault Reset	0 → 1	—	—	—	—	(15)

To prevent commands from being missed during communication errors, keep the Fault Reset command with bit 7 set to "1" for the time specified below according to the communication cycle.

- When the communication cycle is less than 5 ms: 10 ms
- When the communication cycle is 5 ms or more: Period which is twice the communication cycle

The above periods are specified to prevent the Fault Reset command from being missed if a communication loss occurs once. Because communication losses occur frequently depending on the machine usage environment, adjust the period based on the environment.

To transition from the "Switch on disabled" state to the "Operation enabled" state, give the commands "Shutdown", "Switch On", and "Enable operation" sequentially. It is possible to transition directly from the current state to the target state with one command.

Current state	Command	State after transition
Switch on disabled	Switch On	Switched on
Switch on disabled	Enable Operation	Operation enabled
Ready to switch on	Enable Operation	Operation enabled

15.3 Controlword/Control DI

The PDS states can be switched and control instructions for various driving-related functions can be given by rewriting the Controlword and Control DI x objects from the controller.

Index (PNU)	Sub	Name	Type	Access	Description
6040h (24640)	—	Controlword	Unsigned 16	Read/Write	—
2D01h (11521)	—	Control DI 1	Unsigned 16	Read/Write	Object defined by Mitsubishi Electric
2D02h (11522)	—	Control DI 2	Unsigned 16	Read/Write	Object defined by Mitsubishi Electric
:	:	:	:	:	:

Bit definition of Controlword

Bit	Symbol	Description
0	SO	Switch On
1	EV	Enable Voltage
2	QS	Quick Stop
3	EO	Enable Operation
4	OMS	The contents differ depending on the setting of [Modes of operation (Obj. 6060h (24672))]. Refer to "CONTROL MODE" in the following manual. MR-JET User's Manual (Function)
5		
6		
7	FR	Fault Reset
8	HALT	0: Operation ready 1: Temporary stop
9	OMS	The contents differ depending on the setting of [Modes of operation]. Refer to "CONTROL MODE" in the following manual. MR-JET User's Manual (Function)
10	—	The value at reading is undefined. Set "0" when writing.
11	—	
12	—	
13	—	
14	—	
15	—	

Bit definition of Control DI

• Control DI 1

Bit	Symbol	Description	Reference
0	—	The value at reading is undefined. Set "0" when writing.	—
1	—		—
2	—		—
3	—		—
4	C_CDP	Gain switching	Refer to "Signal (device) explanation" in the following manual. MR-JET User's Manual (Hardware)
5	C_CLD	Fully closed loop selection	
6	—	The value at reading is undefined. Set "0" when writing.	—
7	—		—
8	—		—
9	—		—
10	—		—
11	—		—
12	—		—
13	—		—
14	—		—
15	—		—

• Control DI 2

Bit	Symbol	Description	Reference
0	—	The value at reading is undefined. Set "0" when writing.	—
1	—		—
2	—		—
3	—		—
4	—		—
5	—		—
6	—		—
7	—		—
8	C_PC	Proportional control	Refer to "Signal (device) explanation" in the following manual. MR-JET User's Manual (Hardware)
9	—	The value at reading is undefined. Set "0" when writing.	—
10	—		—
11	—		—
12	—		—
13	—		—
14	—		—
15	C_ORST	Operation alarm reset Turning on C_ORST resets [AL. 0F4 Positioning warning].	—

• Control DI 3

Bit	Symbol	Description	Reference
0	—	The value at reading is undefined. Set "0" when writing.	—
1	—		—
2	—		—
3	—		—
4	—		—
5	—		—
6	—		—
7	—		—
8	—		—
9	—		—
10	—		—
11	—		—
12	—		—
13	—		—
14	—		—
15	—		—

• Control DI 4

Bit	Symbol	Description	Reference
0	—	The value at reading is undefined. Set "0" when writing.	—
1	—		—
2	—		—
3	—		—
4	—		—
5	—		—
6	—		—
7	—		—
8	—		—
9	—		—
10	—		—
11	—		—
12	—		—
13	—		—
14	—		—
15	—		—

• Control DI 5

Bit	Symbol	Description	Reference
0	—	The value at reading is undefined. Set "0" when writing.	—
1	—		—
2	—		—
3	—		—
4	C_CDP2	Gain switching 2	Refer to "Signal (device) explanation" in the following manual. MR-JET User's Manual (Hardware)
5	—	The value at reading is undefined. Set "0" when writing.	—
6	—		—
7	—		—
8	—		—
9	—		—
10	—		—
11	—		—
12	—		—
13	—		—
14	—		—
15	—		—

• Control DI 6

Bit	Symbol	Description	Reference
0	—	The value at reading is undefined. Set "0" when writing.	—
1	—		—
2	—		—
3	—		—
4	—		—
5	—		—
6	—		—
7	—		—
8	—		—
9	—		—
10	—		—
11	—		—
12	—		—
13	—		—
14	—		—
15	—		—

• Control DI 7

Bit	Symbol	Description	Reference
0	—	The value at reading is undefined. Set "0" when writing.	—
1	—		—
2	—		—
3	—		—
4	—		—
5	—		—
6	—		—
7	C_OVR	Override selection	Refer to "Override function" in the following manual. MR-JET User's Manual (Function)
8	—	The value at reading is undefined. Set "0" when writing.	—
9	—		—
10	—		—
11	—		—
12	—		—
13	—		—
14	—		—
15	—		—

• Control DI 8

Bit	Symbol	Description	Reference
0	—	The value at reading is undefined. Set "0" when writing.	—
1	—		—
2	—		—
3	—		—
4	—		—
5	—		—
6	—		—
7	—		—
8	—		—
9	—		—
10	—		—
11	—		—
12	—		—
13	—		—
14	—		—
15	—		—

• Control DI 9

Bit	Symbol	Description	Reference
0	—	The value at reading is undefined. Set "0" when writing.	—
1	—		—
2	—		—
3	—		—
4	—		—
5	—		—
6	—		—
7	—		—
8	—		—
9	—		—
10	—		—
11	—		—
12	—		—
13	—		—
14	—		—
15	—		—

• Control DI 10

Bit	Symbol	Description	Reference
0	—	The value at reading is undefined. Set "0" when writing.	—
1	—		—
2	—		—
3	—		—
4	—		—
5	—		—
6	—		—
7	—		—
8	—		—
9	—		—
10	—		—
11	—		—
12	—		—
13	—		—
14	—		—
15	—		—

15.4 Statusword/Status DO

The Statusword and Status DO x objects notify the controller of the PDS state and other drive states.

Index (PNU)	Sub	Name	Type	Access	Description
6041h (24641)	—	Statusword	Unsigned 16	Read	—
2D11h (11537)	—	Status DO 1	Unsigned 16	Read	Object defined by Mitsubishi Electric
2D12h (11538)	—	Status DO 2	Unsigned 16	Read	Object defined by Mitsubishi Electric
:	:	:	:	:	:

Bit definition of Statusword

Bit	Symbol	Description
0	RTSO	Ready To Switch On
1	SO	Switched On
2	OE	Operation Enabled
3	F	Fault
4	VE	Voltage-enabled 0: The bus voltage is lower than the specified (RA) level. 1: The bus voltage is equal to or higher than the specified level.
5	QS	Quick stop 0: In a Quick stop 1: Not in a Quick stop (including in the test mode)
6	SOD	Switch On Disabled
7	W	Warning 0: No warning has occurred. 1: A warning has occurred.
8	—	Reserved The value at reading is undefined.
9	RM	Remote 0: Not following the Controlword command. 1: Operating in accordance with the Controlword command.
10	OMS	Operation Mode Specific The contents differ depending on the setting of [Modes of operation (Obj. 6060h (24672))]. Refer to "CONTROL MODE" in the following manual. MR-JET User's Manual (Function)
11	ILA	Internal limit active 0: The forward rotation stroke end, reverse rotation stroke end, and software position limit have not been reached. 1: The forward rotation stroke end, reverse rotation stroke end, or software position limit has been reached. (Enabled in pp, pv, hm, pt, or jg mode)
12	OMS	Operation Mode Specific The contents differ depending on the setting of [Modes of operation (Obj. 6060h (24672))]. Refer to "CONTROL MODE" in the following manual. MR-JET User's Manual (Function) "0" is set when in the test operation mode.
13		
14	—	Reserved The value at reading is undefined.
15		

State coding

Bit 0 to Bit 3, Bit 5, and Bit 6 are switched depending on the PDS state (servo amplifier internal state). Refer to the following table for details.

Statusword (bin)	PDS state
x0xx xxx0 x0xx 0000	Not ready to switch on *1
x0xx xxx0 x1xx 0000	Switch on disabled
x0xx xxx0 x01x 0001	Ready to switch on
x0xx xxx0 x01x 0011	Switched on
x0xx xxx0 x01x 0111	Operation enabled
x0xx xxx0 x00x 0111	Quick stop active
x0xx xxx0 x0xx 1111	Fault reaction active
x0xx xxx0 x0xx 1000	Fault

*1 Statusword is not sent when in the "Not ready to switch on" state.

Bit definition of Status DO

• Status DO 1

Bit	Symbol	Description	Reference
0	—	The value at reading is undefined.	—
1	—		—
2	S_SA	Speed reached	Refer to "Signal (device) explanation" in the following manual. MR-JET User's Manual (Hardware)
3	S_MBR	Electromagnetic brake interlock	
4	S_CDPS	Variable gain enabled	
5	S_CLDS	Fully closed loop control in progress	
6	—	The value at reading is undefined.	—
7	—		—
8	—		—
9	—		—
10	—		—
11	—		—
12	S_INP	In-position	Refer to "Signal (device) explanation" in the following manual. MR-JET User's Manual (Hardware)
13	S_TLC	Limiting torque	
14	S_ABSV	Absolute position erased	
15	S_BWNG	Battery warning	

• Status DO 2

Bit	Symbol	Description	Reference
0	S_ZPASS	Z-phase already passed After the Z-phase is passed, S_ZPASS turns on.	—
1	—	The value at reading is undefined.	—
2	—		—
3	S_ZSP	Zero speed detection	Refer to "Signal (device) explanation" in the following manual. MR-JET User's Manual (Hardware)
4	S_VLC	Limiting speed	
5	—	The value at reading is undefined.	—
6	S_IPF	In IPF During instantaneous power failure, S_IPF is on.	—
7	—	The value at reading is undefined.	—
8	S_PC	Proportional control in progress S_PCturns on under proportional control.	—
9	—	The value at reading is undefined.	—
10	S_DB	External dynamic brake output	—
11	—	The value at reading is undefined.	—
12	—		—
13	—		—
14	—		—
15	S_ZP2	Homing completion 2 When homing finishes successfully, S_ZP2 turns on.	—

• Status DO 3

Bit	Symbol	Description	Reference
0	—	The value at reading is undefined.	—
1	—		—
2	—		—
3	—		—
4	—		—
5	S_STO	In STO state S_STO turns on in the STO state.	Refer to "Monitor signal (digital)" in the following manual. MR-JET User's Manual (Function)
6	—	The value at reading is undefined.	—
7	—		—
8	S_ABSV2	Absolute position erased 2 (for scale measurement) When the absolute position of the scale measurement encoder is erased in the scale measurement function, S_ABSV2 turns on.	—
9	—	The value at reading is undefined.	—
10	—		—
11	S_MTTR	Tough drive in progress	Refer to "Tough drive function" in the following manual. MR-JET User's Manual (Function)
12	—	The value at reading is undefined.	—
13	—		—
14	—		—
15	—		—

• Status DO 4

Bit	Symbol	Description	Reference
0	—	The value at reading is undefined.	—
1	—		—
2	—		—
3	—		—
4	—		—
5	—		—
6	—		—
7	—		—
8	—		—
9	—		—
10	—		—
11	—		—
12	—		—
13	—		—
14	—		—
15	—		—

• Status DO 5

Bit	Symbol	Description	Reference
0	—	The value at reading is undefined.	—
1	—		—
2	—		—
3	—		—
4	S_CDPS2	Variable gain enabled 2	Refer to "GAIN SWITCHING FUNCTION" in the following manual. MR-JET User's Manual (Adjustment)
5	S_CPO	Rough match When the command remaining distance is less than the value of the rough match output range set in [Pr. PT12], S_CPO is on. This is not output during base circuit shut-off. When the servo amplifier is switched to the servo-on state, S_CPOturns on.	—
6	S_MEND	Traveling completion If droop pulses are within the in-position output range set in [Pr. PA10] and the command remaining distance is "0", S_MEND turns on. S_MEND turns on at servo-on. S_MEND is off in the servo-off state.	—
7	—	The value at reading is undefined.	—
8	—		—
9	—		—
10	—		—
11	—		—
12	—		—
13	—		—
14	—		—
15	—		—

• Status DO 6

Bit	Symbol	Description	Reference
0	—	The value at reading is undefined.	—
1	—		—
2	—		—
3	—		—
4	—		—
5	—		—
6	—		—
7	—		—
8	—		—
9	—		—
10	—		—
11	—		—
12	—		—
13	—		—
14	—		—
15	—		—

• Status DO 7

Bit	Symbol	Description	Reference
0	—	The value at reading is undefined.	—
1	—		—
2	S_POT	Position range When the actual current position is within the range set in [Pr. PT19] and [Pr. PT21], S_POT is on. When homing is not complete or base circuit shut-off is in progress, S_POT is off.	—
3	—	The value at reading is undefined.	—
4	—		—
5	—		—
6	—		—
7	—		—
8	—		—
9	—		—
10	—		—
11	—		—
12	—		—
13	—		—
14	—		—
15	—		—

• Status DO 8

Bit	Symbol	Description	Reference
0	—	The value at reading is undefined.	—
1	—		—
2	—		—
3	—		—
4	—		—
5	—		—
6	—		—
7	—		—
8	—		—
9	—		—
10	—		—
11	—		—
12	—		—
13	—		—
14	—		—
15	—		—

• Status DO 9

Bit	Symbol	Description	Reference
0	—	The value at reading is undefined.	—
1	—		—
2	—		—
3	—		—
4	—		—
5	—		—
6	—		—
7	—		—
8	—		—
9	—		—
10	—		—
11	—		—
12	—		—
13	—		—
14	—		—
15	—		—

• Status DO 10

Bit	Symbol	Description	Reference
0	—	The value at reading is undefined.	—
1	—		—
2	—		—
3	—		—
4	—		—
5	—		—
6	—		—
7	—		—
8	—		—
9	—		—
10	—		—
11	—		—
12	—		—
13	—		—
14	—		—
15	—		—

15.5 Control mode

Selectinga control mode (Modes of operation)

Specify a control mode with [Modes of operation (Obj. 6060h (24672))]. [Modes of operation] can be rewritten with a PDO or an SDO. The available control modes are limited as follows depending on the setting value of [Pr. PT01.2].

○: Supported, —: Not supported

[Pr. PA01.0]	[Pr. PT01.2]	pp	pv	tq	hm	jg	pt	6061h Initial value
0 (Network standard mode)	2 (degree) 3 (pulse)	○	○	○	○	—	—	1 (pp)
6 (Positioning mode (point table method))	0 (mm) 1 (inch) 2 (degree) 3 (pulse)	—	—	—	○	○	○	-101 (pt)

Index (PNU)	Subindex	Name	Type	Access	Default value	Description
6060h (24672)	—	Modes of operation	Integer8	Read/Write	Varies depending on [Pr. PA01] and [Pr. PT01]	0: No mode change/No mode assigned 1: Profile position mode (pp) 3: Profile velocity mode (pv) 4: Profile torque mode (tq) 6: Homing mode (hm)
6061h (24673)	—	Modes of operation display	Integer8	Read	Varies depending on [Pr. PA01] and [Pr. PT01]	0: No mode assigned 1: Profile position mode (pp) 3: Profile velocity mode (pv) 4: Profile torque mode (tq) 6: Homing mode (hm)
6502h (25858)	—	Supported drive mode	Unsigned32	Read	0000002Dh	Bit = 1 for the following modes bit 0: Profile position mode bit 2: Profile velocity mode bit 3: Profile torque mode bit 5: Homing mode

Control switching

Point

The OMS bit of [Controlword (Obj. 6040h (24640))] is not accepted until the control switching is complete. Before inputting commands, check that the control mode has been switched by referring to [Modes of operation display (Obj. 6061h (24673))]. In addition, switch the control modes when the start command is turned off. (For example, when "Homing operation start" is turned off in hm mode.)

As there is a time lag in the control mode switching processing, the controller must keep sending the command value corresponding to the control mode until the mode is completely switched. After the completion of the control mode switching is confirmed by [Modes of operation display], the controller can stop updating the command value before switching.

Before switching to or from the position mode, select whether to perform it within the ZSP (zero speed detection) range in [Pr. PC76.1 ZSP disabled selection at control switching]. Whether the servo motor is in the zero speed state can be obtained by bit 3 (S_ZSP) of [Status DO 2 (Obj. 2D12h (11538))].

If [Pr. PC76.1] is set to "0" (enabled (control switching is performed within the range of ZSP)), [Modes of operation display] does not change because the control switching can be executed only in the zero speed state.

If [Pr. PC76.1] is set to "1" (disabled (control switching is performed regardless of the range of ZSP)), a shock may occur at control switching.

16 PROFIdrive Parameter

For details of each PROFIdrive parameter, refer to the following according to PNU.

PNU	Index	Reference
0 to 999, 60000	0000h to 0383h, EA60h	☞ Page 114 List of PROFIdrive standard parameters
1000 to 4095	0384h to 0FFFh	☞ Page 118 List of PROFIdrive manufacture parameters
From 4096	From 1000h	☞ Page 120 Object dictionary (OD)

16.1 List of PROFIdrive standard parameters

The supported PROFIdrive standard parameters are as follows.

To read and write PROFIdrive standard parameters, use PROFIdrive Parameter Access.

Refer to the following for details.

☞ Page 83 PROFIdrive Parameter Access

The Mapping column indicates whether each item can be mapped to the transmitted and received data using the variable mapping function available with Telegrams 202 and 203. For details of the variable mapping function, refer to the following.

☞ Page 79 Variable mapping

PNU	PROFIdrive parameter name	Description
922	Telegram selection	This parameter returns the currently used main telegram.
930	Operating mode	This parameter returns the currently used control mode.
944	Fault message counter	This parameter returns the counter value, which is incremented by one whenever the Fault number is updated.
947	Fault number	This parameter returns the number of the current alarm.
964	Drive Unit identification data block	This parameter returns the module information of the servo amplifier.
965	Profile identification number	This parameter returns Profile Number and Version Number of the PROFIdrive.
975	DO identification	Returns the identification information of the drive object.
980	Number list of defined parameters	Returns a list of all supported PROFIdrive parameters.
60000	Velocity reference value	Sets the 100% speed value of the N2/N4 normalized speed signals (NIST, NSOLL).

16.2 Details of PROFIdrive standard parameters

[Telegram selection (PNU922)]

Data Type	Access	Mapping	Default	Range	Save
Unsigned16	Read	Impossible	1	Refer to the following.	Impossible

This parameter returns the currently used main telegram.

Setting value	Description
1	Standard telegram 1
200	Telegram 200
202	Telegram 202
203	Telegram 203

[Operating mode (PNU930)]

Data Type	Access	Mapping	Default	Range	Save
Unsigned16	Read	Impossible	1	Refer to the following.	Impossible

This parameter returns the currently used control mode.

Setting value	Description
1	PROFIdrive Speed Control Mode
32768	Manufacturer-specific mode

[Fault message counter (PNU944)]

Data Type	Access	Mapping	Default	Range	Save
Unsigned16	Read Only	Impossible	0	0 to 65535	Impossible

This parameter returns the counter value, which is incremented by one whenever the Fault number is updated.

[Fault number (PNU947)]

Data Type	Access	Mapping	Default	Range	Save
Array [n] Unsigned16	Read Only	Impossible	0	0 to 65535	Impossible

This parameter returns the number of the current alarm. "n" in Array [n] indicates the Subindex.

If an alarm occurs in the servo amplifier, the alarm number is stored in Array [0].

If no alarm occurs in the servo amplifier, "0" (No error) is set in Array [0].

Value	Description
0x0000	none
Other than 0x0000	Alarm number

Subindex

Subindex	Description
0	unacknowledged faults Indicates the current alarm number.
Other than 0	0 (fixed)

[Drive Unit identification data block (PNU964)]

Data Type	Access	Mapping	Default	Range	Save
Array [n] Unsigned16	Read Only	Impossible	—	—	Impossible

This parameter returns the module information of the servo amplifier. "n" in Array [n] indicates the Subindex.

Subindex

Subindex	Name	Setting value
0	Manufacturer	540 (Mitsubishi Electric Corporation)
1	Drive Unit type	0
2	Version (Software)	— For example, interpret "110" as V1.10.
3	Firmware date (year)	yyyy: year
4	Firmware date (day/month)	ddmm: day/month
5	Number of Drive Objects (DO)	1: 1-axis servo amplifier

[Profile identification number (PNU965)]

Data Type	Access	Mapping	Default	Range	Save
Octet string [2]	Read Only	Impossible	—	—	Impossible

This parameter returns Profile Number and Version Number of the PROFIdrive.

Octet string [n]	value
0	3 (PROFIdrive Profile)
1	42 (Version 4.2)

[DO identification (PNU975)]

Data Type	Access	Mapping	Default	Range	Save
Array [n] Unsigned16	Read Only	Impossible	—	—	Impossible

This parameter reads the identification information of the drive object. "n" in Array [n] indicates the Subindex.

Subindex

Subindex	Name	Setting value
0	Manufacturer	540 (Mitsubishi Electric Corporation)
1	DO Type	0
2	Version (Software)	— For example, interpret "110" as V1.10.
3	Firmware date (year)	yyyy: year
4	Firmware date (day/month)	ddmm: day/month
5	PROFIdrive DO type class	1 (Axis)
6	PROFIdrive DO sub class 1	1 (Application Class 1 supported)
7	Drive Object ID (DO-ID)	1: A-axis

[Number list of defined parameters (PNU980)]

Data Type	Access	Mapping	Default	Range	Save
Array [n] Unsigned16	Read Only	Impossible	—	—	Impossible

Returns a list of all supported PROFIdrive parameters.

The PROFIdrive parameter numbers are assigned to each Subindex in ascending order.

When the displayed value is "0", it indicates that the end of the list has been reached.

[Velocity reference value (PNU60000)]

Data Type	Access	Mapping	Default	Range	Save
float32	Read Only	Impossible	—	—	possible

The setting value of this PNU is the 100% speed value of the N2/N4 normalized speed signals (NIST, NSOLL).

The speed value is in [r/min] when [PA01.1 Operation mode selection] is set to a mode other than the linear servo motor control mode, and is in [m/min] when the linear servo motor control mode is selected.

For details, refer to the following manual.

📖MR-JET-G User's Manual (Parameters)

For the N2/N4 normalized speed signals, refer to the following.

☞ Page 119 [Speed setpoint A (PNU1055)]

☞ Page 119 [Speed actual value A (PNU1056)]

This PNU corresponds to [Pr. PV41 Speed reference value].

16.3 List of PROFIdrive manufacture parameters

The supported PROFIdrive manufacturer parameters are as follows.

To read and write PROFIdrive manufacture parameters, use PROFIdrive Parameter Access.

Refer to the following for details.

☞ Page 83 PROFIdrive Parameter Access

The Mapping column indicates whether each item can be mapped to the transmitted and received data using the variable mapping function available with Telegrams 202 and 203. For details of the variable mapping function, refer to the following.

☞ Page 79 Variable mapping

PNU	PROFIdrive parameter name	Description
1051	Control word 1	Sets Control word 1.
1052	Status word 1	Returns Status word 1.
1055	Speed setpoint A	Sets the speed setting value A (16 bits).
1056	Speed actual value A	Returns the current speed A (16 bits).
2051	f or n Reached Or Exceeded level	Sets the speed level at which "f Or n Reached Or Exceeded" turns on.
2052	f or n Reached Or Exceeded time	Sets the filter time required for "f Or n Reached Or Exceeded" to turn on.
2058	Speed Error Within Tolerance Range value	Sets the speed level for "Speed Error Within Tolerance Range".
2059	Speed Error Within Tolerance Range hysteresis	Sets the hysteresis for "Speed Error Within Tolerance Range".
2060	Speed Error Within Tolerance Range time	Sets the off-delay time for "Speed Error Within Tolerance Range".

16.4 Details of PROFIdrive manufacture parameters

[Control word 1 (PNU1051)]

Data Type	Access	Mapping	Default	Range	Save
Unsigned16	Read/Write	Setpoint	0000h	0000h to FFFFh	Impossible

For details of the PROFIdrive parameter of Control word 1, refer to the following.

☞ Page 89 control word 1

[Status word 1 (PNU1052)]

Data Type	Access	Mapping	Default	Range	Save
Unsigned16	Read	Actual value	0000h	0000h to FFFFh	Impossible

For details of the PROFIdrive parameter of Status word 1, refer to the following.

☞ Page 90 Status word 1

[Speed setpoint A (PNU1055)]

Data Type	Access	Mapping	Default	Range	Save
signed16	Read/Write	Setpoint	0	-32768 to 32767	Impossible

Set the speed setting value A.

When "16384" is set, the setting value is 100% of the speed specified by [Velocity reference value (PNU60000)].

[Speed actual value A (PNU1056)]

Data Type	Access	Mapping	Default	Range	Save
signed16	Read	Actual value	0	-32768 to 32767	Impossible

The current speed A is returned.

When "16384" is set, the speed feedback is 100% of the speed specified by [Velocity reference value (PNU60000)].

[f or n Reached Or Exceeded level (PNU2051)]

Data Type	Access	Mapping	Default	Range	Save
unsigned32	Read/Write	Setpoint	0	0 to 2147483647	possible

Set the speed level for bit 10 (f Or n Reached Or Exceeded) of [Status word 1 (PNU1052)] in units of 0.01 r/min or 0.01 mm/s.

When the absolute value of the servo motor speed is greater than or equal to the value set for this PNU and the time specified by [f Or n Reached Or Exceeded Time (PNU2052)] has elapsed, "f Or n Reached Or Exceeded" turns on. If this PNU is set to "0", "f Or n Reached Or Exceeded" is always on.

This PNU corresponds to [Pr. PV36 f or n Reached Or Exceeded output level].

[f or n Reached Or Exceeded time (PNU2052)]

Data Type	Access	Mapping	Default	Range	Save
unsigned32	Read/Write	Setpoint	0	0 to 65535	possible

Set the filter time for bit 10 (f Or n Reached Or Exceeded) of [Status word 1 (PNU1052)] in milliseconds.

When the absolute value of the servo motor speed exceeds [f or n Reached Or Exceeded level (PNU2051)] and the time specified by this PNU has elapsed, "f Or n Reached Or Exceeded" turns on.

This PNU corresponds to [Pr. PV37 f or n Reached Or Exceeded output filter time].

[Speed Error Within Tolerance Range value (PNU2058)]

Data Type	Access	Mapping	Default	Range	Save
unsigned32	Read/Write	Setpoint	0	0 to 2147483647	possible

Set the speed level for "Speed Error Within Tolerance Range" in units of 0.01 r/min or 0.01 mm/s.
When the difference between the setting value of this PNU and the current speed is greater than or equal to the value set for [Speed Error Within Tolerance Range hysteresis (PNU2059)], and the time specified by [Speed Error Within Tolerance Range time (PNU2060)] has elapsed, Bit 8 (Speed Error Within Tolerance Range) of [Status word 1 (PNU1052)] turns off.
If this PNU is set to "0", the speed level for "Speed Error Within Tolerance Range" is the speed command value.
This PNU corresponds to [Pr. PV38 Speed Error Within Tolerance Range speed].

[Speed Error Within Tolerance Range hysteresis (PNU2059)]

Data Type	Access	Mapping	Default	Range	Save
unsigned32	Read/Write	Setpoint	0	0 to 2147483647	possible

Set the hysteresis for "Speed Error Within Tolerance Range" in units of 0.01 r/min or 0.01 mm/s.
When the difference between the setting value of [Speed Error Within Tolerance Range value (PNU2058)] and the current speed is greater than or equal to the value set for this PNU, and the time specified by [Speed Error Within Tolerance Range time (PNU2060)] has elapsed, Bit 8 (Speed Error Within Tolerance Range) of [Status word 1 (PNU1052)] turns off.
If this PNU is set to "0", "Speed Error Within Tolerance Range" is always on.
This PNU corresponds to [Pr. PV39 Speed Error Within Tolerance Range hysteresis].

[Speed Error Within Tolerance Range time (PNU2060)]

Data Type	Access	Mapping	Default	Range	Save
unsigned32	Read/Write	Setpoint	0	0 to 65535	possible

Set the off-delay time for "Speed Error Within Tolerance Range" in milliseconds.
When the difference between the setting value of [Speed Error Within Tolerance Range value (PNU2058)] and the current speed is greater than or equal to the value set for [Speed Error Within Tolerance Range hysteresis (PNU2059)], and the time specified by this PNU has elapsed, Bit 8 (Speed Error Within Tolerance Range) of [Status word 1 (PNU1052)] turns off.
This PNU corresponds to [Pr. PV40 Speed Error Within Tolerance Range off delay time].

16.5 Object dictionary (OD)

Various data held by the servo amplifier, such as control parameters, command values, and feedback values, is handled as objects composed of an object name, object type, data type, and other elements. The object data can be exchanged with the IO Controller as PROFIdrive parameters. The collection of these objects is called an object dictionary (OD).
The object dictionary also contains objects related to the CiA 402 drive profile.
In the servo amplifier, each object in the object dictionary can be accessed by specifying Number of parameter (PNU) assigned to the object.
For details of the object dictionary, refer to the following manual.
📖MR-JET-G-N1 User's Manual (Object Dictionary)
"Object dictionary" must be replaced with "PROFIdrive Parameter" in the notation. For details of alternative reading, refer to "Notation related to objects for each communication type" in the following manual.
📖MR-JET-G-N1 User's Manual (Object Dictionary)

16.6 Saving PROFIdrive parameters

Some of the PROFIdrive parameter data is saved in non-volatile memory, while other data is not. Use [Store parameters (PNU4112)] to save the PROFIdrive parameter data in non-volatile memory.
Whether each PROFIdrive parameter can be saved in non-volatile memory, refer to the following.
☞ Page 115 Details of PROFIdrive standard parameters
☞ Page 119 Details of PROFIdrive manufacture parameters
📖MR-JET-G-N1 User's Manual (Object Dictionary)

Store parameters

Writing "65766173h" (= "save" in reverse ASCII byte order) to [Save all parameters (PNU4112: 1)] saves the PROFIdrive parameter settings to the non-volatile memory of the servo amplifier.
It may take approximately 25 s for [Save all parameters (PNU4112: 1)] to save all parameters. Do not turn off the power supply during writing.
When [Save all parameters (PNU4112: 1)] is read, the values shown below are returned. Bit 0 is "0" during the save operation and "1" when the save operation is not in progress.

Bit	Description
0	0: Objects cannot be saved by the command (save operation in progress) 1: Objects can be saved by the command (save operation not in progress)
1	0: Not automatically saved

Precautions

To turn off the power supply after executing Store parameters, make sure that the save operation is not in progress (bit 0 is 1), and then turn off the power supply.

REVISIONS

*The manual number is given on the bottom left of the back cover.

Revision date	*Manual number	Description
November 2019	IB(NA)-0300500ENG-A	First edition
July 2020	IB(NA)-0300500ENG-B	■The following function is added: Profile mode ■Added/edited: Section 1.1, Section 1.3, Section 2.1, Section 4.3, Section 4.5, Chapter 6, Section 7.2, Section 7.3, Section 7.4, Chapter 8 ■Deleted: Section 7.5
November 2020	IB(NA)-0300500ENG-C	■The following functions are added and changed: Cyclic asynchronous mode, degree unit, identifying slave stations with node addresses ■Added/edited: Section 6.1, Section 6.3, Section 7.4, Section 8.3
March 2021	IB(NA)-0300500ENG-D	■The following function is added: Positioning mode (point table method) ■Edited: Section 1.1, Section 4.3, Section 4.5, Section 6.1, Section 7.3, Section 7.4
July 2021	IB(NA)-0300500ENG-E	■Edited: Section 7.4, Section 8.2
July 2022	IB(NA)-0300500ENG-F	■The following functions are added and changed: Fully closed loop system, Ethernet over EtherCAT (EoE), Quick Stop, infinite feed function ■Added/edited: Section 1.1, Section 1.4, Section 2.1, Section 2.4, Section 9.2
January 2023	IB(NA)-0300500ENG-G	■The following function is added: Override function ■The following function is changed: PDO Mapping ■Added/edited: Section 1.1, Section 3.1, Section 4.2, Section 7.2, Chapter 8, Section 9.2
October 2024	IB(NA)-0300500ENG-H	■The following model is added: MR-JET-_G_-HSN1 ■Added/edited: Section 1.1, Section 2.1, Section 3.1, Section 4.3, Section 4.4, Section 7.3, Chapter 8, Section 9.2, Section 9.3
July 2025	IB(NA)-0300500ENG-J	■Edited: Section 8.3
February 2026	IB(NA)-0300500ENG-K	■The chapter structure is changed. ■Added/edited: Section 1.2, Section 7.2, Section 7.4, Chapter 10 ■Deleted: Section 9.3
October 2026	IB(NA)-0300500ENG-L	■The following function is added: PROFINET ■Added/edited: Section 1.1, Section 4.5, Section 6.1, Section 6.3, Section 7.4, Chapter 8, Section 10.1, PART 2

This manual confers no industrial property rights or any rights of any other kind, nor does it confer any patent licenses. Mitsubishi Electric Corporation cannot be held responsible for any problems involving industrial property rights which may occur as a result of using the contents noted in this manual.

© 2019 MITSUBISHI ELECTRIC CORPORATION

WARRANTY

Warranty

1. Warranty period and coverage

We will repair any failure or defect hereinafter referred to as "failure" in our FA equipment hereinafter referred to as the "Product" arisen during warranty period at no charge due to causes for which we are responsible through the distributor from which you purchased the Product or our service provider. However, we will charge the actual cost of dispatching our engineer for an on-site repair work on request by customer in Japan or overseas countries. We are not responsible for any on-site readjustment and/or trial run that may be required after a defective unit is repaired or replaced.

[Term]

For terms of warranty, please contact your original place of purchase.

[Limitations]

(1) You are requested to conduct an initial failure diagnosis by yourself, as a general rule.
It can also be carried out by us or our service company upon your request and the actual cost will be charged. However, it will not be charged if we are responsible for the cause of the failure.

(2) This limited warranty applies only when the condition, method, environment, etc. of use are in compliance with the terms and conditions and instructions that are set forth in the instruction manual and user manual for the Product and the caution label affixed to the Product.

(3) Even during the term of warranty, the repair cost will be charged on you in the following cases;

1. a failure caused by your improper storing or handling, carelessness or negligence, etc., and a failure caused by your hardware or software problem
2. a failure caused by any alteration, etc. to the Product made on your side without our approval
3. a failure which may be regarded as avoidable, if your equipment in which the Product is incorporated is equipped with a safety device required by applicable laws and has any function or structure considered to be indispensable according to a common sense in the industry
4. a failure which may be regarded as avoidable if consumable parts designated in the instruction manual, etc. are duly maintained and replaced
5. any replacement of consumable parts (battery, fan, smoothing capacitor, etc.)
6. a failure caused by external factors such as inevitable accidents, including without limitation fire and abnormal fluctuation of voltage, and acts of God, including without limitation earthquake, lightning and natural disasters
7. a failure generated by an unforeseeable cause with a scientific technology that was not available at the time of the shipment of the Product from our company
8. any other failures which we are not responsible for or which you acknowledge we are not responsible for

2. Term of warranty after the stop of production

(1) We may accept the repair at charge for another seven (7) years after the production of the product is discontinued. The announcement of the stop of production for each model can be seen in our Sales and Service, etc.

(2) Please note that the Product (including its spare parts) cannot be ordered after its stop of production.

3. Service in overseas countries

Our regional FA Center in overseas countries will accept the repair work of the Product. However, the terms and conditions of the repair work may differ depending on each FA Center. Please ask your local FA center for details.

4. Exclusion of loss in opportunity and secondary loss from warranty liability

Regardless of the gratis warranty term, Mitsubishi shall not be liable for compensation to:

(1) Damages caused by any cause found not to be the responsibility of Mitsubishi.

(2) Loss in opportunity, lost profits incurred to the user by Failures of Mitsubishi products.

(3) Special damages and secondary damages whether foreseeable or not, compensation for accidents, and compensation for damages to products other than Mitsubishi products.

(4) Replacement by the user, maintenance of on-site equipment, start-up test run and other tasks.

5. Change of Product specifications

Specifications listed in our catalogs, manuals or technical documents may be changed without notice.

6. Application and use of the Product

(1) For the use of our AC Servo, its applications should be those that may not result in a serious damage even if any failure or malfunction occurs in AC Servo, and a backup or fail-safe function should operate on an external system to AC Servo when any failure or malfunction occurs.

(2) Our AC Servo is designed and manufactured as a general purpose product for use at general industries.
Therefore, applications substantially influential on the public interest for such as atomic power plants and other power plants of electric power companies, and also which require a special quality assurance system, including applications for railway companies and government or public offices are not recommended, and we assume no responsibility for any failure caused by these applications when used.
In addition, applications which may be substantially influential to human lives or properties for such as airlines, medical treatments, railway service, incineration and fuel systems, man-operated material handling equipment, entertainment machines, safety machines, etc. are not recommended, and we assume no responsibility for any failure caused by these applications when used.
We will review the acceptability of the abovementioned applications, if you agree not to require a specific quality for a specific application. Please contact us for consultation.

(3) Mitsubishi Electric shall have no responsibility or liability for any problems involving programmable controller trouble and system trouble caused by DoS attacks, unauthorized access, computer viruses, and other cyberattacks.

TRADEMARKS

MELSERVO is a trademark or registered trademark of Mitsubishi Electric Corporation in Japan and/or other countries.
All other product names and company names are trademarks or registered trademarks of their respective companies.

TRANSLATION OF THE ORIGINAL INSTRUCTIONS

IB(NA)-0300500ENG-L(2610)MEE
MODEL:
MODEL CODE:

MITSUBISHI ELECTRIC CORPORATION

HEAD OFFICE: TOKYO BLDG., 2-7-3, MARUNOUCHI, CHIYODA-KU, TOKYO 100-8310, JAPAN
NAGOYA WORKS: 1-14, YADA-MINAMI 5-CHOME, HIGASHI-KU, NAGOYA 461-8670, JAPAN

When exported from Japan, this manual does not require application to the Ministry of Economy, Trade and Industry for service transaction permission.

Specifications are subject to change without notice.
Compliance with the indicated global standards and regulations is current as of the release date of this manual.