Side B | Side A JAPANESE / Side B ENGLISH

JY997D61001L

1

MITSUBISHI ELECTRIC

Programmable Controller
MELSEC iQ-F

MELSEC iQ-F FX5UC CPU Module

Hardware Manual

FX5UC

Manual Number	JY997D61001
Revision	L
Date	October 2025

This manual describes the part names, dimensions, installation, cabling and specifications for the product. This manual is extracted from MELSEC iQ-F FX5S/FX5UJ/FX5U/FX5UC User's Manual (Hardware). Refer to MELSEC iQ-F FX5S/FX5UJ/FX5U/FX5UC User's Manual (Hardware) for more details. Before use, read this manual and manuals of relevant products fully to acquire proficiency in the handling and operating the product. Make sure to learn all the product information, safety information, and precautions.
And, store this manual in a safe place so that you can take it out and read it whenever necessary. Always forward it to the end user.
Registration: MODBUS® is a registered trademark of Schneider Electric SA. The company name and the product name to be described in this manual are the registered trademarks or trademarks of each company.

Effective October 2025
Specifications are subject to change without notice.

© 2015 MITSUBISHI ELECTRIC CORPORATION

Safety Precautions (Read these precautions before use.)

If the equipment is used in a manner not specified by the manufacturer, the protection provided by the equipment may be impaired.
This manual classifies the safety precautions into two categories: ⚠WARNING and ⚠CAUTION.

⚠WARNING	Indicates that incorrect handling may cause hazardous conditions, resulting in death or severe injury.
⚠CAUTION	Indicates that incorrect handling may cause hazardous conditions, resulting in minor or moderate injury or property damage.

Depending on the circumstances, procedures indicated by ⚠CAUTION may also cause severe injury.
It is important to follow all precautions for personal safety.

STARTUP AND MAINTENANCE PRECAUTIONS ⚠WARNING

- Do not touch any terminal while the PLC's power is on. Doing so may cause electric shock or malfunctions.
- Use the battery for memory backup in conformance to the MELSEC iQ-F FX5S/FX5UJ/FX5U/FX5UC User's Manual (Hardware)
  - Use the battery for the specified purpose only.
  - Connect the battery correctly.
  - Do not charge, disassemble, heat, put in fire, short-circuit, connect reversely, weld, swallow or burn the battery, or apply excessive forces (vibration, impact, drop, etc.) to the battery.
  - Do not store or use the battery at high temperatures or expose to direct sunlight.
  - Do not expose to water, bring near fire or touch liquid leakage or other contents directly.
  - When replacing the battery, make sure to use our specified product (FX3U-32BL).
  - When a battery error occurs ("BAT" LED is lit in red), follow the description in MELSEC iQ-F FX5S/FX5UJ/FX5U/FX5UC User's Manual (Hardware).

  Incorrect handling of the battery may cause heat excessive generation, bursting, ignition, liquid leakage or deformation, and lead to injury, fire or failures and malfunction of facilities and other equipment.

STARTUP AND MAINTENANCE PRECAUTIONS ⚠WARNING

- Before cleaning or retightening terminals, cut off all phases of the power supply externally. Failure to do so in the power ON status may cause electric shock.
- Before modifying the program in operation, forcible output, running or stopping the PLC, read through this manual carefully, and ensure complete safety. An operation error may damage the machinery or cause accidents.
- Do not change the program in the PLC from two or more peripheral equipment devices at the same time. (i.e. from an engineering tool and a GOT) Doing so may cause destruction or malfunction of the PLC program.

STARTUP AND MAINTENANCE PRECAUTIONS ⚠CAUTION

- Do not disassemble or modify the PLC. Doing so may cause fire, equipment failures, or malfunctions. For repair, contact your local Mitsubishi Electric representative.
- Turn off the power to the PLC before connecting or disconnecting any extension cable. Failure to do so may cause equipment failures or malfunctions.
- Turn off the power to the PLC before attaching or detaching the following devices. Failure to do so may cause equipment failures or malfunctions.
  - Peripheral devices, expansion adapter, and connector conversion adapter
  - Extension modules, bus conversion module, connector conversion module, and battery
- Do not use the chemicals for cleaning.
- If there is the possibility of touching the PLC inside a control panel in maintenance, make sure to discharge to avoid the influence of static electricity.
- Since there are risks such as burn injuries, please do not touch the surface of the equipment with bare hands when it is operating in an environment which exceeds ambient temperature of 50°C.

DISPOSAL PRECAUTIONS ⚠CAUTION

- Please contact a certified electronic waste disposal company for the environmentally safe recycling and disposal of your device.
- When disposing of batteries, separate them from other waste according to local regulations. (For details on the Battery Directive in EU countries, refer to the MELSEC iQ-F FX5S/FX5UJ/FX5U/FX5UC User's Manual (Hardware).)

TRANSPORTATION PRECAUTIONS ⚠CAUTION

- When transporting the PLC with the optional battery, turn on the PLC before shipment, confirm that the battery mode is set using a parameter and the BAT LED is OFF, and check the battery life. If the PLC is transported with the BAT LED ON or the battery exhausted, the battery-backed data may be unstable during transportation.
- The PLC is a precision instrument. During transportation, avoid impacts larger than those specified in the general specifications (Section 2.1) by using dedicated packaging boxes and shock-absorbing palettes. Failure to do so may cause failures in the PLC. After transportation, verify operation of the PLC and check for damage of the mounting part, etc.
- When transporting lithium batteries, follow required transportation regulations. (For details on the regulated products, refer to the MELSEC iQ-F FX5S/FX5UJ/FX5U/FX5UC User's Manual (Hardware).)

How to obtain manuals

How to obtain manuals

- For the necessary product manuals or documents, consult with your local Mitsubishi Electric representative.
- The hardware manuals of intelligent function modules can be downloaded from the two-dimensional code on the right or the following web page.
  www.mitsubishielectric.com/fa/ref/ref.html?k=plc&manual=fx5_eng

Associated manuals
FX5UC CPU module comes with this document (hardware manual).
For a detailed explanation of the FX5UC CPU module hardware and information on instructions for PLC programming, refer to the relevant documents.

Manual name [Manual No.]	Description
MELSEC iQ-F FX5S/FX5UJ/FX5U/FX5UC User's Manual (Hardware) [SH-082452ENG]	Describes the details of hardware of the CPU module, including performance specifications, wiring, installation, and maintenance.
MELSEC iQ-F FX5 User's Manual (Communication) [SH-082625ENG]	Describes the communication function of the built-in CPU module and the Ethernet module.

2

Certification of UL, cUL standards

Please consult with Mitsubishi Electric for information on UL, cUL standard practices and the corresponding types of equipment.

Compliance with EU directive (CE Marking)

This product complies with EU directive, however, this document does not guarantee that a mechanical system including this product will comply with EU directive. Compliance to EMC directive and LVD directive of the entire mechanical system should be checked by the user/manufacturer. For more details please contact the local Mitsubishi Electric sales site.

Caution for compliance with EU Directive

- Please use the FX5UC CPU modules while installed in conductive shielded control panels under a general industrialenvironment.
- Programmable controllers are open-type devices that must be installed and used within conductive control panels. Please secure the control box lid to the control box (for conduction). Installation within a control box greatly affects the safety of the system and aids in shielding noise from the programmable controller.
- For the control panel, use the product having sufficient strength, fire protectiveness and shielding property to an installation environment.
- 24 V DC of the power supply must be supplied from the circuit double/reinforced insulated from the main power supply (MAINS).

[Caution for compliance with the LVD directive]*1

- To an external connection port other than AC power supply terminal and AC input/output terminal, connect the circuit separated from a dangerous voltage by a double/reinforced insulation.
- Do not wire two or more crimp terminals to one terminal. (If the wiring with two or more wires is needed, take an appropriate action such as adding an external terminal.)
- For crimp terminals to be used for the wiring applied with 30 V AC or higher, use the products with insulating sleeves.
- Cutoff device such as a breaker or a circuit protector should be installed in accordance with the following precautions.
  - Use EN60947-1 or EN60947-3 standards.
  - Place the cutoff device so that it can be operated easily.
  - Specify that the cutoff device is for this equipment.

*1 For the time of compliance with the LVD directive, refer to MELSEC iQ-F FX5S/FX5UJ/FX5U/FX5UC User's Manual (Hardware).

Compliance with UKCA marking

The requirements for compliance with UKCA marking are the same as that with EU directive (CE marking).

Incorporated Items

Check if the following product and items are included in the package:

	Included Items	
■ CPU module		
FX5UC-□MT/D (□: 32, 64, 96)	Product	1 module
	FX2NC-100MPCB [1 m, three wire]	1 cable
	FX2NC-100BPCB [1 m, two wire]	1 cable
	Manuals [Japanese/English]	1 manual
	Manuals [Chinese]	1 manual
FX5UC-□MT/DSS FX5UC-32MT/DS-TS FX5UC-32MT/DSS-TS FX5UC-32MR/DS-TS (□: 32, 64, 96)	Product	1 module
	FX2NC-100MPCB [1 m, three wire]	1 cable
	Manuals [Japanese/English]	1 manual
	Manuals [Chinese]	1 manual
■ I/O module		
FX5-C□EX/D FX5-C32ET/D (□: 16, 32)	Product	1 module
	FX2NC-10BPCB1 [0.1 m, double-ended]	1 cable
FX5-C□EX/DS FX5-C32EX/DS-TS FX5-C32ET/DSS FX5-C32ET/DS(S)-TS FX5-C□EYT/D(SS) FX5-C32EYT/D(SS)-TS FX5-C16EYR/D-TS (□: 16, 32)	Product	1 module

1. Outline

1.1 Part names

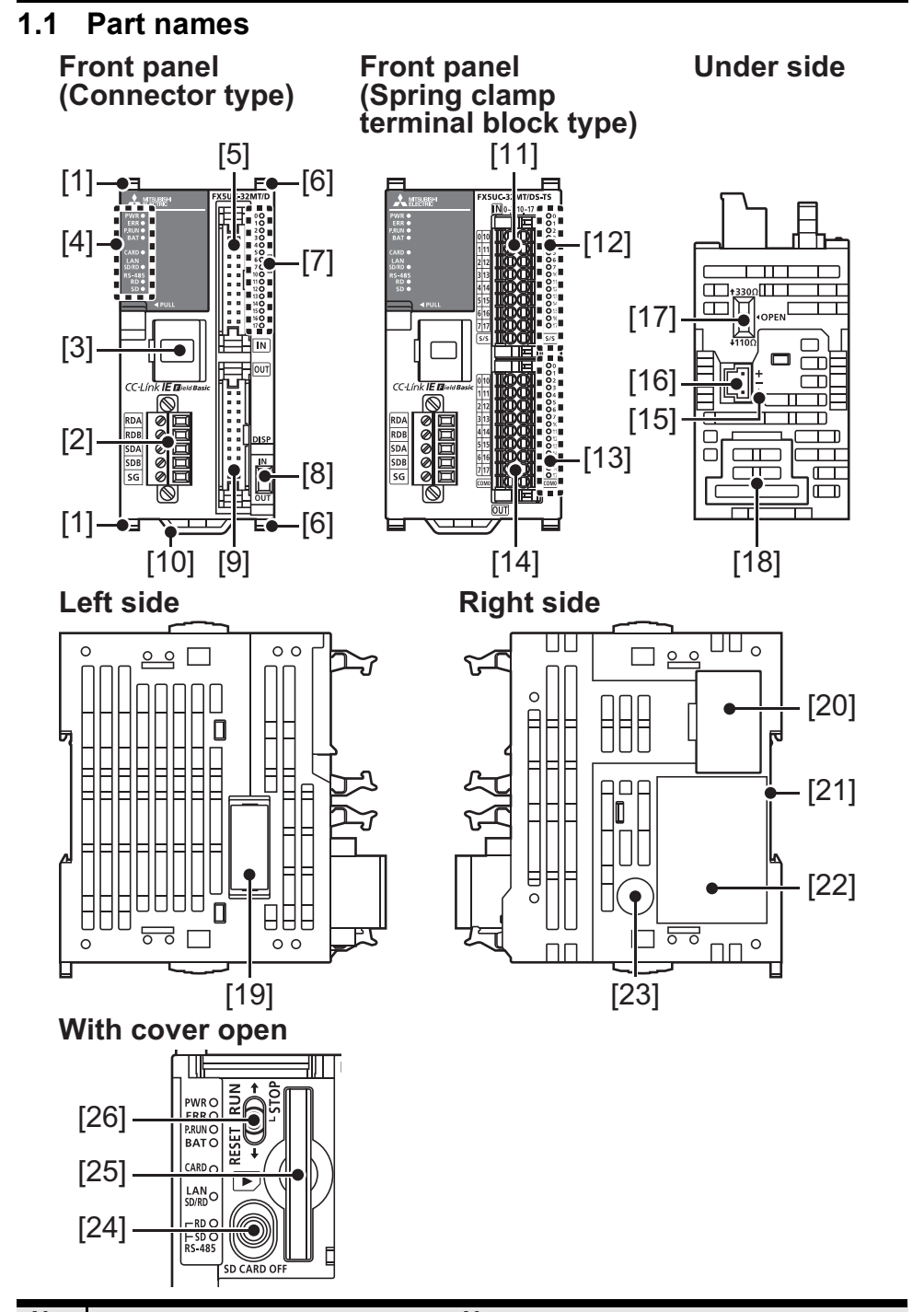

No.	Name		
[1]	Expansion adapter connecting hooks		
[2]	Built-in RS-485 communication terminal block		
[3]	Built-in Ethernet communication connector (with cover)		
[4]	Operation status display LEDs		
	PWR	Green	On while the PLC is powered.
	ERR*1	Red	Lit/flashing when an error occurs.
	P.RUN	Green	On while the PLC is running.
	BAT	Red	Lit when the battery voltage drops.
	CARD	Green	Lit when the SD memory card is inserted.
	SD/RD	Green	Lit when data is sent or received through communication via built-in Ethernet.
	RD	Green	Lit when data is received through communication via built-in RS-485.
	SD	Green	Lit when data is sent through communication via built-in RS-485.
[5]	Input connector		
[6]	Extension module connection hooks		
[7]	Input/Output display LEDs (Green)		
[8]	DISP switch (for switching Input/Output display LEDs)		

3

No.	Name
[9]	Output connector
[10]	DIN rail mounting hooks
[11]	Input terminal
[12]	Input display LEDs (Green)
[13]	Output display LEDs (Green)
[14]	Output terminal
[15]	Terminal names ⏚ shows a function grounding terminal.
[16]	Power connector for CPU module
[17]	RS-485 terminal resister selector switch
[18]	Battery cover
[19]	Expansion adapter connector cover
[20]	Extension connector cover
[21]	DIN rail mounting groove
[22]	Nameplate printing*2 ⚠ is a mark that instructs to use the cable with an appropriate temperature rating (80°C or more) for wiring.
[23]	Genuine product certification label*2
[24]	SD memory card disable switch
[25]	SD memory card slot
[26]	RUN/STOP/RESET switch

*1 When powered on in the factory default state, ERR LED starts flashing because there is no program. For details, refer to the following manual.
→ **Refer to MELSEC iQ-F FX5S/FX5UJ/FX5U/FX5UC User's Manual (Hardware).**
*2 Products that do not have the genuine product certification label or nameplate are not covered by the warranty.

1.2 External dimensions and weight

Unit: mm

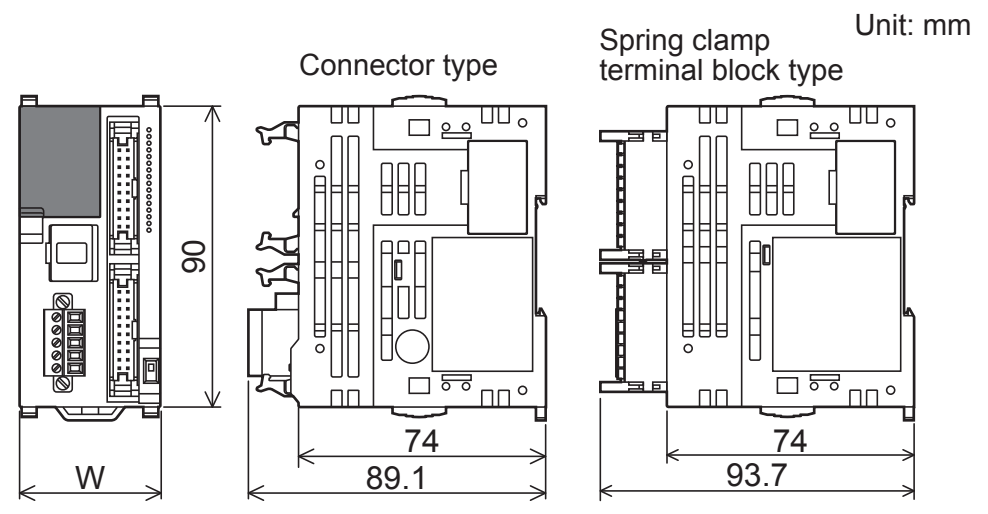

Model name	W: mm	MASS (Weight): kg
FX5UC-32MT/D FX5UC-32MT/DSS	42.1	Approx. 0.2
FX5UC-32MT/DS-TS FX5UC-32MT/DSS-TS	48.1	Approx. 0.25
FX5UC-32MR/DS-TS	68.2	Approx. 0.35
FX5UC-64MT/D FX5UC-64MT/DSS	62.2	Approx. 0.3
FX5UC-96MT/D FX5UC-96MT/DSS	82.3	Approx. 0.35

Outer paint color Body: Munsell 0.6B7.6/0.2

2. Installation (general specifications)

As for installation of the I/O modules and expansion adapters, refer to MELSEC iQ-F FX5S/FX5UJ/FX5U/FX5UC User's Manual (Hardware).

INSTALLATION PRECAUTIONS ⚠WARNING

- Use the product within the generic environment specifications described in section 2.1 of this manual. Never use the product in areas with excessive dust, oily smoke, conductive dusts, corrosive gas (salt air, Cl_2, H_2S, SO_2 or NO_2), flammable gas, vibration or impacts, or expose it to high temperature, condensation, or rain and wind.
  If the product is used in such conditions, electric shock, fire, malfunctions, deterioration or damage may occur.

INSTALLATION PRECAUTIONS ⚠CAUTION

- Do not touch the conductive parts of the product directly. Doing so may cause device failures or malfunctions.
- When drilling screw holes or wiring, make sure that cutting and wiring debris do not enter the ventilation slits of the PLC. Failure to do so may cause fire, equipment failures or malfunctions.
- Install the product on a flat surface. If the mounting surface is rough, undue force will be applied to the PC board, thereby causing nonconformities.
- Install the product securely using a DIN rail or mounting screws.
- Connect the extension cables, peripheral device cables, input/output cables and battery connecting cable securely to their designated connectors. Loose connections may cause malfunctions.
- Turn off the power to the PLC before attaching or detaching the following devices. Failure to do so may cause equipment failures or malfunctions.
  - Peripheral devices, expansion adapter, and connector conversion adapter
  - Extension modules, bus conversion module, connector conversion module, and battery

2.1 Generic specifications

Item	Specification					
Operating surrounding air temperature*1	-20 to 55℃ (-4 to 131℉), non-freezing*2					
Storage surrounding air temperature	-25 to 75℃ (-13 to 167℉), non-freezing					
Operating surrounding humidity	5 to 95%RH, non-condensing*3					
Storage surrounding humidity	5 to 95%RH, non-condensing					
Vibration resistance*4*5		Frequency (Hz)	Acceleration (m/s²)	Half amplitude (mm)	Sweep count	
	Installed on DIN rail	5 to 8.4	—	1.75	10 times each in X, Y, Z directions (80 min in each direction)	
		8.4 to 150	4.9	—		
Shock resistance*4	147 m/s² Acceleration, Action time: 11 ms, 3 times by half-sine pulse in each direction X, Y, and Z					
Noise durability	By noise simulator of 1000 Vp-p noise voltage, 1 μs noise width and 30 to 100 Hz noise frequency					
Dielectric withstand voltage*6	500 V AC for 1 minute	Between batch of all terminals and ground terminal				
Insulation resistance*6	10 MΩ or higher by 500 V DC insulation resistance tester					
Grounding	Class D grounding (Grounding resistance: 100 Ω or less) <Common grounding with a heavy electrical system is not allowed.>*7					
Working atmosphere	Free from corrosive or flammable gas and excessive conductive dusts					
Operating altitude*8	0 to 2000 m					
Installation location	Inside a control panel*9					
Overvoltage category*10	II or less					
Pollution degree*11	2 or less					

*1 The simultaneous ON ratio of available PLC inputs or outputs changes with respect to the ambient temperature. In the case where operating ambient temperature is lower than 0℃, the specifications are different from the above description. Refer to MELSEC iQ-F FX5S/FX5UJ/FX5U/FX5UC User's Manual (Hardware).
*2 The operating ambient temperature is 0 to 55℃ (32 to 131℉) for products manufactured before June 2016. For intelligent function modules, refer to the manual for each product.
*3 When used in a low-temperature environment, use in an environment with no sudden temperature changes. If there are sudden temperature changes because of opening/closing of the control panel or other reasons, condensation may occur, which may cause a fire, fault, or malfunction. Furthermore, use an air conditioner in dehumidifier mode to prevent condensation.
*4 The criterion is shown in IEC61131-2.
*5 When the system has equipment which specification values are lower than above mentioned vibration resistance specification values, the vibration resistance specification of the whole system is corresponding to the lower specification.
*6 For dielectric withstand voltage test and insulation resistance test of each product, refer to the following manual.

4

→ **Refer to MELSEC iQ-F FX5S/FX5UJ/FX5U/FX5UC User's Manual (Hardware).**
*7 For grounding, refer to Section 3.2.
*8 The PLC cannot be used at a pressure higher than the atmospheric pressure to avoid damage.
*9 The programmable controller is assumed to be installed in an environment equivalent to indoor.
*10 This indicates the section of the power supply to which the equipment is assumed to be connected between the public electrical power distribution network and the machinery within premises. Category II applies to equipment for which electrical power is supplied from fixed facilities. The surge voltage withstand level for up to the rated voltage of 300 V is 2500 V.
*11 This index indicates the degree to which conductive material is generated in the environment in which the equipment is used. Pollution level 2 is when only non-conductive pollution occurs. Temporary conductivity caused by condensation must be expected occasionally.

2.2 Installation location

Install the PLC in an environment conforming to the generic specifications (Section 2.1), installation precautions.

Installation location in enclosure

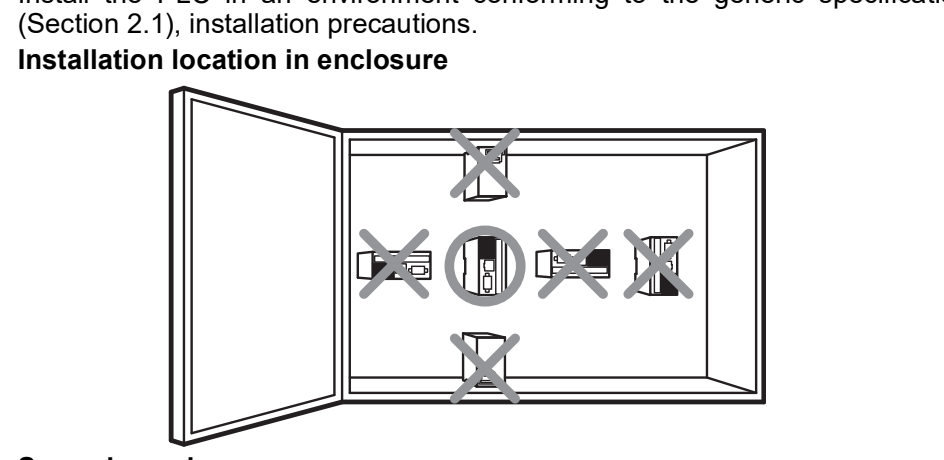

Space in enclosure
Extension devices can be connected on the left and right sides of the CPU module. If you intend to add extension devices in the future, keep necessary spaces on the left and right sides.

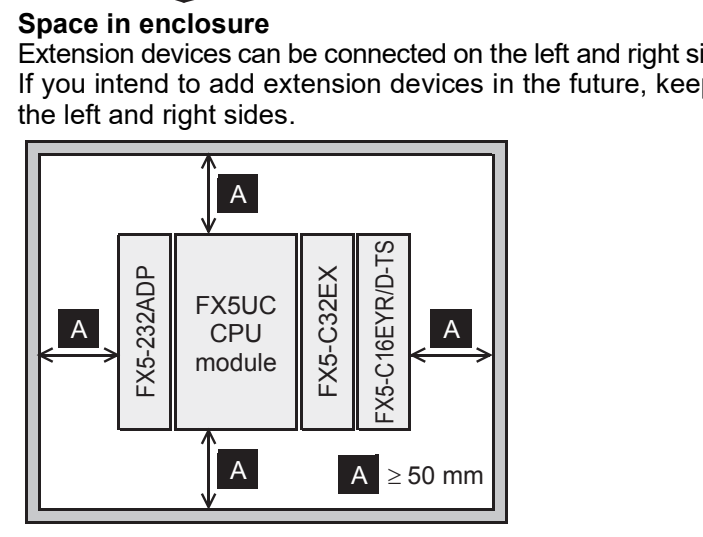

2.3 Procedures for installing to and detaching from DIN rail

The products can be installed on a DIN46277 rail [35 mm wide]. This section explains the installations of the CPU modules.

2.3.1 Installation

1) Push out all DIN rail mounting hooks (below fig. A)

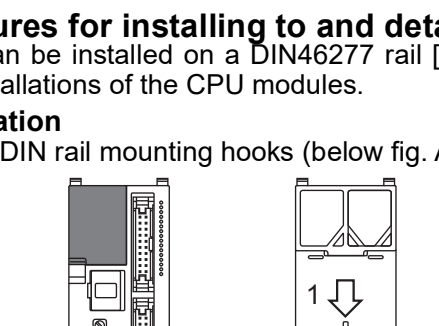

2) Fit the upper edge of the DIN rail mounting groove (right fig. B) onto the DIN rail.

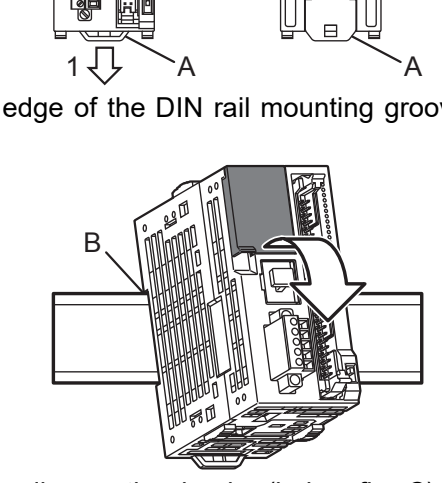

3) Lock the DIN rail mounting hooks (below fig. C) while pressing the PLC against the DIN rail.

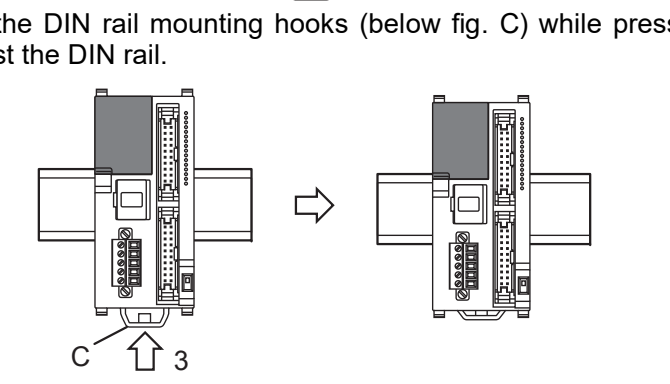

2.4 Connection of power supply connector

Use the power connector to supply power to the CPU module.
For details, refer to MELSEC iQ-F FX5S/FX5UJ/FX5U/FX5UC User's Manual (Hardware).

2.5 Connection to input/output connector

The input/output connectors of the CPU modules (Connector type) conform to MIL-C-83503.
For details, refer to MELSEC iQ-F FX5S/FX5UJ/FX5U/FX5UC User's Manual (Hardware).

1) Compliant connectors (commercially available connectors)
   Use a 20-pin (1-key) socket connector conforming to MIL-C-83503.
   Confirm in advance that the connectors do not interfere with other parts including connector covers.
2) Input/output cables (available from Mitsubishi)
   Input/output cables with attached connectors are available.

Model names	Length	Description	Shape
FX-16E-500CAB-S	5 m	General-purpose input/output cable	• Single wire (Wire color: red) • PLC side: A 20-pin connector
FX-16E-150CAB	1.5 m	Cables for connecting the terminal module with input/output connectors. For terminal module connection, refer to MELSEC iQ-F FX5S/FX5UJ/FX5U/FX5UC User's Manual (Hardware).	• Flat cables (with tube) • A 20-pin connector at both ends
FX-16E-300CAB	3 m		
FX-16E-500CAB	5 m		
FX-16E-150CAB-R	1.5 m		• Round multicore cables • A 20-pin connector at both ends
FX-16E-300CAB-R	3 m		
FX-16E-500CAB-R	5 m		

3) Connectors for user-made input/output cables (available from Mitsubishi)
   Users should provide electric wires and a pressure bonding tool.

Model name and composition of input/output connector			Applicable electric wire (UL-1061 are recommended) and tool	
Our model name		Details of part (made by DDK Ltd.)	Electric wire size	Pressure bonding tool (made by DDK Ltd.)
FX2C-I/O-CON for flat cable	10-piece set	Solderless connector FRC2-A020-30S	AWG28 (0.1 mm²) 1.27 pitch, 20-core	357J-4674D: Main body 357J-4664N: Attachment
FX2C-I/O-CON-S for bulk wire	5-piece set	Housing HU-200S2-001 Solderless contact HU-411S	AWG22 (0.3 mm²)	357J-5538
FX2C-I/O-CON-SA for bulk wire	5-piece set	Housing HU-200S2-001 Solderless contact HU-411SA	AWG20 (0.5 mm²)	357J-13963

4) Certified connectors (commercially available connectors)
   Connectors made by DDK Ltd. shown in item 3).

2.6 Connection to input/output terminal block

The input/output terminal blocks of the products which have -TS at the end of their model name conform to spring clamp terminal block.
For details, refer to MELSEC iQ-F FX5S/FX5UJ/FX5U/FX5UC User's Manual (Hardware).

1) Wire size

No. of wire per terminal	Wire size		
	Single wire/Strand wire	Ferrules with insulation sleeve	Ferrules without insulation sleeve
One wire	AWG24 to 16	AWG22 to 18	AWG20 to 16

2) Treatment of wire ends
   - When not using a ferrule
     When not using a ferrule, strip the cable about 10 mm from the tip and connect it as a strand wire so that the wires do not separate.If the wire strip length is too long, it may result in electric shock or short circuit between adjacent terminals because the conductive part is exposed from the terminal block toward the front. If the wire strip length is too short, it may result in the unstable connection to the spring clamp terminal part.
   - When using a ferrule
     To attach a ferrule to a wire, use a tool for the ferrule. For the wire strip length, follow the specification of the ferrule. As not using a ferrule, if the wire is not stripped to appropriate length, electric shock, short circuit, or unstable connection may result.
     When a ferrule with insulation sleeve is used, it is difficult to insert the wire into the insulation sleeve depending on the thickness of the wire sheath.

5

Therefore, select the proper wire according to the external dimensions.

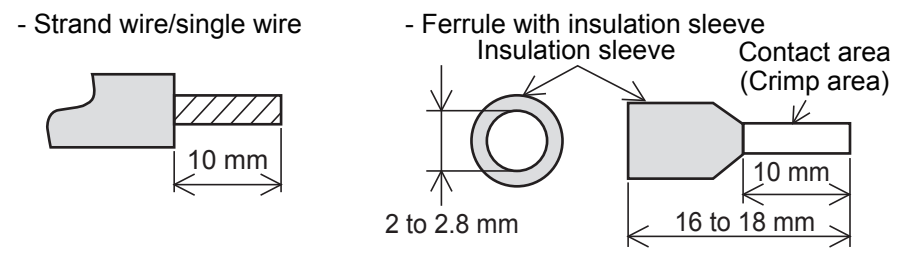

The following table shows ferrules and tools for ferrules compatible with the terminal block. Use of items other than these may result in not being able to remove the ferrule, so carefully check that the ferrule can be unplugged.
When using the products in this manual as a UL/cUL listed product, use a reference product as well.
<Reference product>

Manufacturer	Model	Wire size	AWG	Crimping tool
PHOENIX CONTACT GmbH & Co. KG	AI 0.34-10 TQ	0.34 mm²	22	CRIMPFOX 6
	AI 0.5-10 WH	0.5 mm²	20	
	AI 0.75-10 GY	0.75 mm²	18	
	A 0.5-10	0.5 mm²	20	
	A 0.75-10	0.75 mm²	18	
	A 1-10	1.0 mm²	18	
	A 1.5-10	1.5 mm²	16	

3) Connection and disconnection of the cable
   Spring clamp terminal block is the push-in type, therefore, wiring without a tool is possible only by inserting the connecting terminal to the terminal block. However, the stranded wire does not comply with the push-in type, and a tool is required for connecting cables.
   - Connection of the cable
     Fully insert a cable or bar solderless terminal whose end has been properly processed into the wire insertion opening.
     If the cable or bar solderless terminal cannot be inserted with this procedure, fully insert the cable or bar solderless terminal while pushing the open/close button with a flathead screwdriver having a tip width of 2.0 to 2.5 mm. After fully inserting the cable, remove the screwdriver.

   Do not tighten terminal screws exceeding the specified torque range. Otherwise it may cause equipment failure or malfunction.
   When wiring with the thick electric wire, make sure to prevent the conductive parts from protruding to the front of the terminal block.
   <Reference>

Manufacturer	Model
PHOENIX CONTACT GmbH & Co. KG	SZS 0.4×2.5 VDE

   - Disconnection of the cable
     While pushing the open/close button with a flathead screwdriver having a tip width of 2.0 to 2.5 mm, disconnect the cable or bar solderless terminal.

2.7 Connection to built-in RS-485 Communication terminal block

The built-in RS-485 Communication terminal block conform to terminal block (European type).
For details, refer to MELSEC iQ-F FX5S/FX5UJ/FX5U/FX5UC User's Manual (Hardware).

1) Wire size

No. of wire per terminal	Wire size	
	Solid wire/Stranded wire	Ferrules with insulating sleeve
1	AWG22 to 20	AWG22 to 20
2	AWG22	—

2) Treatment of wire ends
   Strip the coating of strand wire and twist the cable core before connecting it, or strip the coating of single wire before connecting it. An alternative connection is to use a ferrule with insulating sleeve.

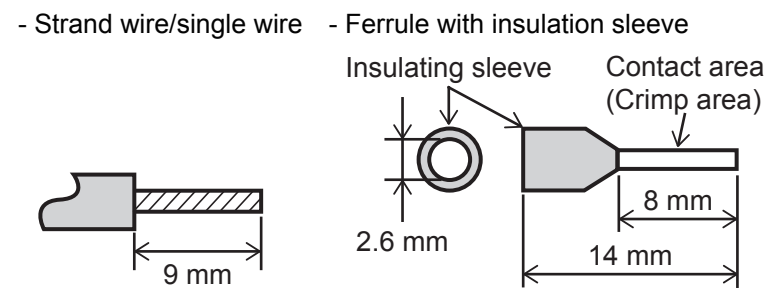

Manufacturer	Model	Caulking tool
PHOENIX CONTACT GmbH & Co. KG	AI 0.5-6WH	CRIMPFOX 6

When using a wire ferrule with an insulating sleeve, choose a wire with proper cable sheath referring to the above outside dimensions, otherwise the wire cannot be inserted easily.
Tighten the screws to a torque of 0.22 to 0.25 N·m.
Do not tighten terminal screws with a torque outside the above-mentioned range.
Failure to do so may cause equipment failures or malfunctions.

3) Tool
   For tightening terminals, use a small screwdriver with a straight tip that is not widened toward the end as shown right.

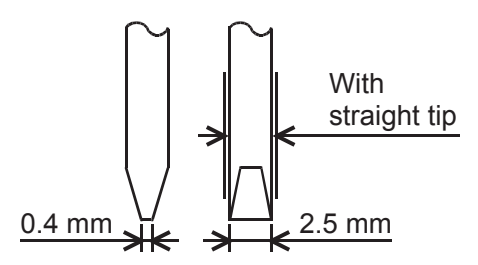

   Note:
   If the diameter of screwdriver grip is too small, tightening torque may not be achieved. To achieve the appropriate tightening torque shown in the table above, use the following screwdriver or appropriate replacement (grip diameter: approximately 25 mm).

Manufacturer	Model names
PHOENIX CONTACT GmbH & Co. KG	SZS 0.4 × 2.5

3. Specifications and examples of external wiring

As for the details of the power supply wiring and input/output wiring, refer to MELSEC iQ-F FX5S/FX5UJ/FX5U/FX5UC User's Manual (Hardware).

DESIGN PRECAUTIONS ⚠WARNING

- Make sure to set up the following safety circuits outside the PLC to ensure safe system operation even during external power supply problems or PLC failure. Otherwise, malfunctions may cause serious accidents.
  - Most importantly, set up the following: an emergency stop circuit, a protection circuit, an interlock circuit for opposite movements (such as normal vs. reverse rotation), and an interlock circuit (to prevent damage to the equipment at the upper and lower positioning limits).
  - Note that when the CPU module detects an error, such as a watchdog timer error, during self-diagnosis, all outputs are turned off. Also, when an error that cannot be detected by the CPU module occurs in an input/output control block, output control may be disabled.
    External circuits and mechanisms should be designed to ensure safe machinery operation in such a case.
  - Note that when an error occurs in a relay, transistor or triac of an output circuit, the output might stay on or off. For output signals that may lead to serious accidents, external circuits and mechanisms should be designed to ensure safe machinery operation in such a case.
- Construct an interlock circuit in the program so that the whole system always operates on the safe side before executing the control (for data change) of the PLC in operation. Read the manual thoroughly and ensure complete safety before executing other controls (for program change, parameter change, forcible output and operation status change) of the PLC in operation. Otherwise, the machine may be damaged and accidents may occur due to erroneous operations.

WIRING PRECAUTIONS ⚠WARNING

- Make sure to cut off all phases of the power supply externally before attempting installation or wiring work.
  Failure to do so may cause electric shock or damage to the product.
- Make sure to attach the terminal cover, provided as an accessory, before turning on the power or initiating operation after installation or wiring work.
  Failure to do so may cause electric shock.
- Use the copper wire with the temperature rating of 80℃ or more.
- Please separate the AC power supply from the AC commercial power supply network with an insulation transformer when connecting to AC input module or AC output module.
- Make sure to properly wire to the terminal block (European type) in accordance with the following precautions.
  Failure to do so may cause electric shock, equipment failures, a short-circuit, wire breakage, malfunctions, or damage to the product.
  - The disposal size of the cable end should follow the dimensions described in the manual.
  - Tightening torque should follow the specifications in the manual.
  - Twist the ends of stranded wires and make sure that there are no loose wires.
  - Do not solder-plate the electric wire ends.
  - Do not connect more than the specified number of wires or electric wires of unspecified size.
  - Affix the electric wires so that neither the terminal block nor the connected parts are directly stressed.

6

WIRING PRECAUTIONS ⚠WARNING

- Make sure to properly wire to the spring clamp terminal block in accordance with the following precautions.
  Failure to do so may cause electric shock, equipment failures, a short-circuit, wire breakage, malfunctions, or damage to the product.
  - The disposal size of the cable end should follow the dimensions described in the manual.
  - Twist the ends of stranded wires and make sure that there are no loose wires.
  - Do not solder-plate the electric wire ends.
  - Do not connect more than the specified number of wires or electric wires of unspecified size.
  - Affix the electric wires so that neither the terminal block nor the connected parts are directly stressed.

WIRING PRECAUTIONS ⚠CAUTION

- Perform class D grounding (grounding resistance: 100 Ω or less) of the grounding terminal on the CPU module and extension modules with a wire 2 mm² or thicker.
  Do not use common grounding with heavy electrical systems (refer to section 3.3).
- When drilling screw holes or wiring, make sure that cutting or wiring debris do not enter the ventilation slits of the PLC.
  Failure to do so may cause fire, equipment failures or malfunctions.
- Connect the power supply wiring to the dedicated terminals described in this manual. If an AC power supply is connected to a DC input/output terminal or DC power supply terminal, the PLC will burn out.
- Do not wire vacant terminals externally. Doing so may damage the product.
- Make sure to observe the following precautions in order to prevent any damage to the machinery or accidents due to malfunction of the PLC caused by abnormal data written to the PLC due to the effects of noise.
  - Do not bundle the power line, control line and communication cables together with or lay them close to the main circuit, high-voltage line, load line or power line. As a guideline, lay the power line, control line and communication cables at least 100 mm away from the main circuit, high-voltage line, load line or power line.
  - Ground the shield of the shielded wire or shielded cable at one point on the PLC. However, do not use common grounding with heavy electrical systems.

3.1 Power supply specifications and external wiring

3.1.1 Power supply specifications [CPU module]

Item		Specification
Power supply voltage		24 V DC
Voltage fluctuation range		+20%, -15%
Allowable instantaneous power failure time		Operation can be continued upon occurrence of instantaneous power failure for 5 ms or less.
Power fuse		125 V 3.15 A Time-lag Fuse
Rush current	FX5UC-32M□/□	35 A max. 0.5 ms or less/24 V DC
	FX5UC-64MT/□ FX5UC-96MT/□	40 A max. 0.5 ms or less/24 V DC
Power consumption *1	FX5UC-32M□/□	5 W/24 V DC [30 W/24 V DC +20%, -15%]
	FX5UC-64MT/□	8 W/24 V DC [33 W/24 V DC +20%, -15%]
	FX5UC-96MT/□	11 W/24 V DC [36 W/24 V DC +20%, -15%]
24 V DC built-in power supply capacity		500 mA
5 V DC built-in power supply capacity		720 mA

*1 This item shows value when only the CPU module is used.
The value in [ ] is the value in the maximum configuration connectable to the CPU module. (The value does not include the external 24 V DC power supply of extension devices)

3.1.2 Example of external wiring

24 V DC power is supplied to the CPU module. CPU module supplies power through dedicated power connector.
For the details, refer to the MELSEC iQ-F FX5S/FX5UJ/FX5U/FX5UC User's Manual (Hardware).

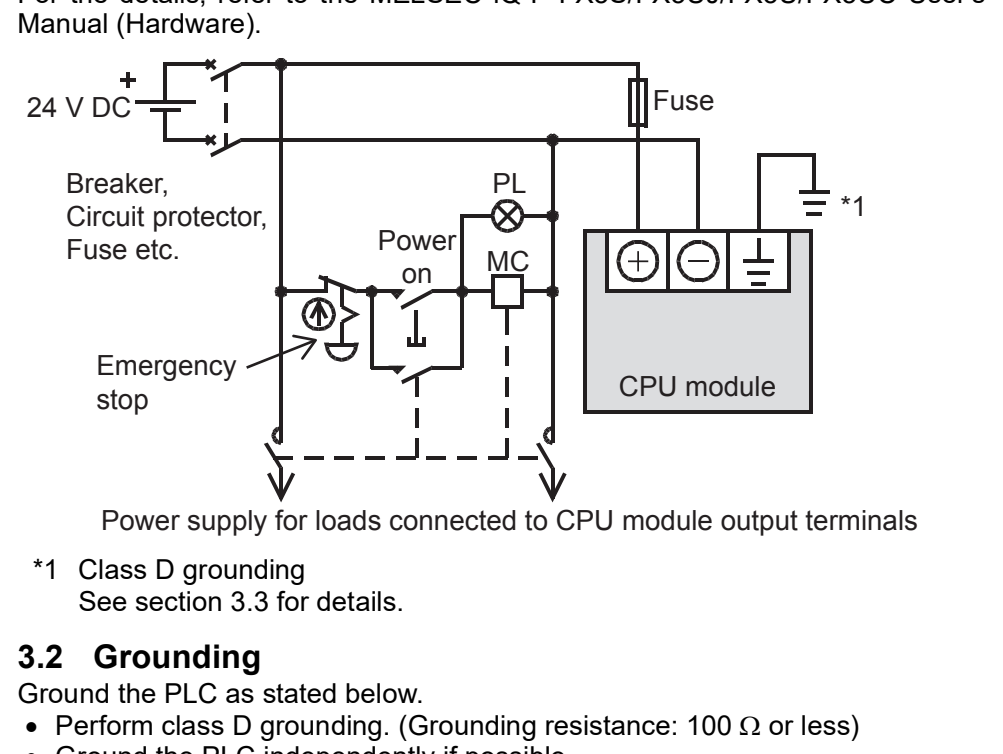

*1 Class D grounding
See section 3.3 for details.

3.2 Grounding

Ground the PLC as stated below.

- Perform class D grounding. (Grounding resistance: 100 Ω or less)
- Ground the PLC independently if possible.
  If it cannot be grounded independently, ground it jointly as shown below.

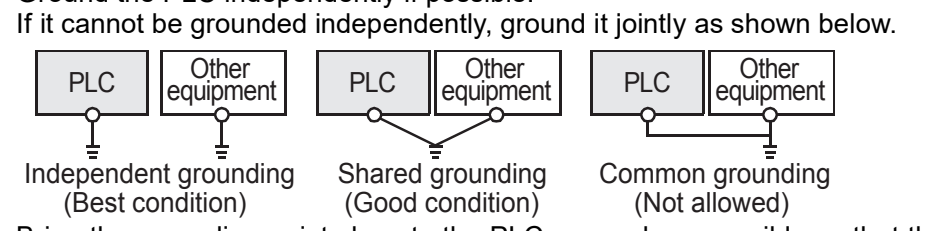

- Bring the grounding point close to the PLC as much as possible so that the ground cable can be shortened.

3.3 Input specifications and external wiring

3.3.1 Input specifications [24 V DC input type]

Item			Specification
Input signal voltage			24 V DC +20%, -15%
Input impedance	CPU module	X0 to X17	4.3 kΩ
		X20 and subsequent	5.6 kΩ
	I/O module		5.6 kΩ
Input signal current	CPU module	X0 to X17	5.3 mA/24 V DC
		X20 and subsequent	4.0 mA/24 V DC
	I/O module		4.0 mA/24 V DC
ON input sensitivity current	CPU module	X0 to X17	3.5 mA or more
		X20 and subsequent	3.0 mA or more
	I/O module		3.0 mA or more
OFF input sensitivity current			1.5 mA or less
Input response time			Refer to MELSEC iQ-F FX5S/FX5UJ/FX5U/FX5UC User's Manual (Hardware)
Input signal form (Input sensor form)	FX5UC-□MT/D FX5-C□EX/D FX5-C32ET/D		• No-voltage contact input • NPN open collector transistor
	FX5UC-□MT/DSS FX5UC-32M□/□-TS FX5-C□EX/DS FX5-C32EX/DS-TS FX5-C32ET/DSS FX5-C32ET/DS(S)-TS		• Sink input: - No-voltage contact input - NPN open collector transistor • Source input: - No-voltage contact input - PNP open collector transistor
Input operation display			LED on panel turns on when input. (DISP switch IN side.)

7

3.3.2 Examples of input wiring

1. Examples of input wiring (FX5UC-□MT/D)

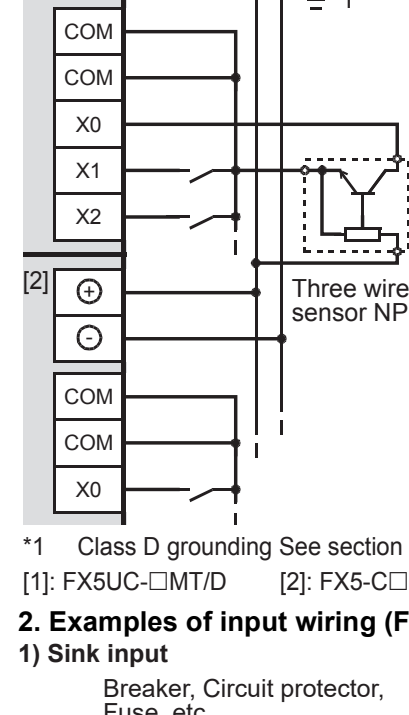

*1 Class D grounding See section 3.3 for details.
[1]: FX5UC-□MT/D [2]: FX5-C□EX/D, FX5-C32ET/D

2. Examples of input wiring (FX5UC-□MT/DSS, FX5UC-32M□/□-TS)

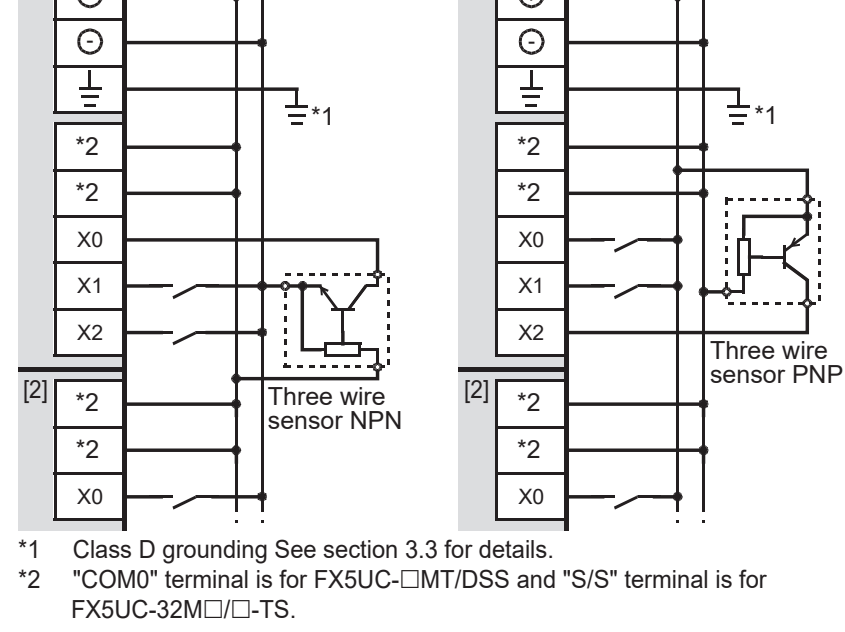

*1 Class D grounding See section 3.3 for details.
*2 "COM0" terminal is for FX5UC-□MT/DSS and "S/S" terminal is for FX5UC-32M□/□-TS.
[1]: FX5UC-□MT/DSS, FX5UC-32M□/□-TS
[2]: FX5-C□EX/DS, FX5-C32EX/DS-TS, FX5-C32ET/DSS, FX5-C32ET/DS(S)-TS

3.4 Transistor output specifications and external wiring

3.4.1 Transistor output specifications

Item			Specification	
Output form	FX5UC-□MT/D, FX5UC-32MT/DS-TS, FX5-C□EYT/D, FX5-C32EYT/D-TS, FX5-C32ET/D, FX5-C32ET/DS-TS,		Transistor (Sink)	
	FX5UC-□MT/DSS, FX5UC-32MT/DSS-TS, FX5-C□EYT/DSS, FX5-C32EYT/DSS-TS, FX5-C32ET/DSS(-TS)		Transistor (Source)	
External power supply			5 to 30 V DC	
Max. load	CPU module	Y0 to Y3	0.3 A/point	Make sure that the total load current of 8 load points is 0.8 A*1 or less.
		Y4 and subsequent	0.1 A/point	
	I/O module		0.1 A/point	
Open circuit leakage current			0.1 mA or less/30 V DC	
ON voltage	CPU module	Y0 to Y3	1.0 V or less	
		Y4 and subsequent	1.5 V or less	
	I/O module		1.5 V or less	
Response time	OFF↔ON	CPU module Y0 to Y3	2.5 μs or less/10 mA or more (5 to 24 V DC)	
		CPU module Y4 and subsequent	0.2 ms or less/100 mA (at 24 V DC)	
		I/O module	0.2 ms or less/100 mA (at 24 V DC)	
Output operation display			LED on panel turns on when output. (DISP switch OUT side.)	

*1 When two COM□ (or +V□) terminals are connected outside the CPU module, resistance load is 1.6 A or less.
Where □ indicates: 0, 1, or 2
As for the number of outputs per common terminal, refer to the following manual.
→ **Refer to MELSEC iQ-F FX5S/FX5UJ/FX5U/FX5UC User's Manual (Hardware).**

3.4.2 External wiring of transistor output

1. External wiring of sink output type

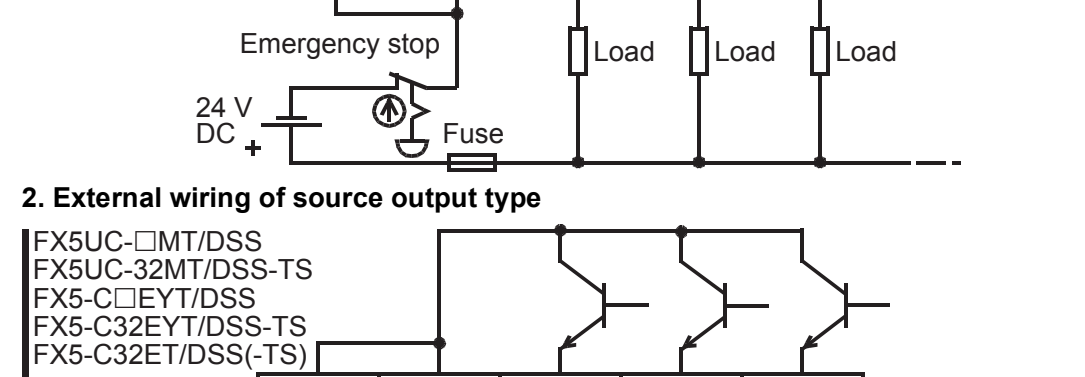

2. External wiring of source output type

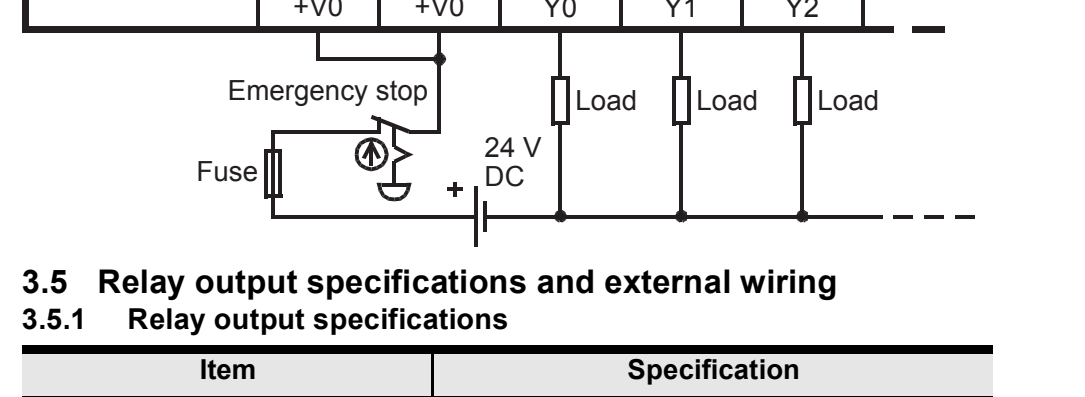

3.5 Relay output specifications and external wiring

3.5.1 Relay output specifications

Item		Specification	
External power supply		30 V DC or less 240 V AC or less ("250 V AC or less" if not a CE, UL, cUL compliant item)	
Max. load		2 A/point	Make sure that the total load current of 8 load points is 4 A*1 or less.
Min. load		5 V DC, 2 mA (reference value)	
Open circuit leakage current		—	
Response time	OFF↔ON	Approx. 10 ms	
Output operation display		LED on panel turns on when output.	

*1 When two COM□ terminals are connected outside the CPU module, resistance load is 8 A or less.
Where □ indicates: 0 or 1

3.5.2 External wiring of relay output

1. External wiring of DC power supply

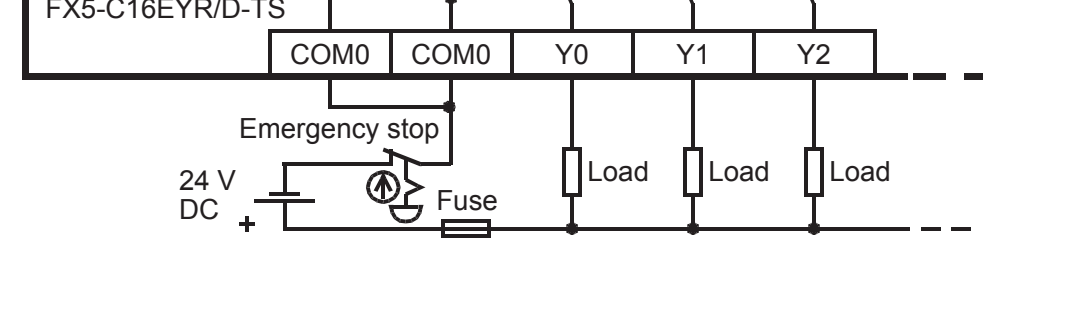

8

2. External wiring of AC power supply

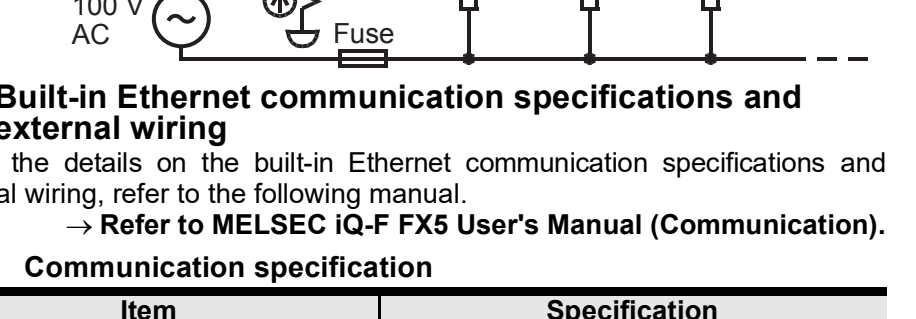

3.6 Built-in Ethernet communication specifications and external wiring

As for the details on the built-in Ethernet communication specifications and external wiring, refer to the following manual.
→ **Refer to MELSEC iQ-F FX5 User's Manual (Communication).**

3.6.1 Communication specification

Item		Specification
Data transmission speed		100/10 Mbps
Communication mode		Full-duplex (FDX)/Half-duplex (HDX)*1
Interface		RJ45 connector
Transmission method		Base band
Maximum segment length (The distance between hub and node)		100 m
Cascade connection	100BASE-TX	Max. 2 stages*2
	10BASE-T	Max. 4 stages*2
Protocol type		CC-Link IE field network Basic, MELSOFT connection, SLMP (3E frame), Socket communication, Predefined protocol support, FTP Server, MODBUS/TCP communication, SNTP client, Web server (HTTP), Simple CPU communication function
Number of simultaneously open connections allowed		Total of 8 connections*3*4 (Up to 8 external devices can access one CPU module at the same time.)
Hub*1		Hubs with 100BASE-TX or 10BASE-T ports can be used.
Insulation method		Pulse transformer
IP address*5		Initial value: 192.168.3.250

*1 IEEE802.3x flow control is not supported.
*2 The value indicates the number of connectable stages when a repeater hub is used.
Contact the manufacturer of the switching hub for the number of connectable stages when using a switching hub.
*3 The first device for MELSOFT connection is not included in the number of connections. (The second and the following devices are included.)
*4 The CC-Link IE field network Basic, FTP server, SNTP client, Web server and simple CPU communication function are not included in the number of connections.
*5 If the first octet is 0 or 127, a parameter error (2222H) will occur. (Example: 0.0.0.0, 127.0.0.0, etc.)

3.6.2 Wiring

For the wiring, refer to the following manual.
→ **Refer to MELSEC iQ-F FX5 User's Manual (Communication).**

3.6.3 Pin Configuration

The connector of the built-in Ethernet communication are arranged as follows:

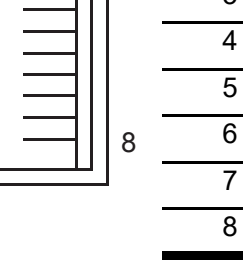

Pin No.	Signal	Contents
1	TXD+	Transmit data (+)
2	TXD-	Transmit data (-)
3	RXD+	Receive data (+)
4	Not used	-
5	Not used	-
6	RXD-	Receive data (-)
7	Not used	-
8	Not used	-

Applicable cable

10BASE-T	Cable conforming to Ethernet standard practice: Category 3 or higher (STP cable)
100BASE-TX	Cable conforming to Ethernet standard practice: Category 5 or higher (STP cable)

A straight cable is used. A cross cable can also be used when using direct connection between a personal computer and the FX5UC CPU module.

3.7 Built-in RS-485 communication specifications and external wiring

3.7.1 Communication specification

Item	Specification
Transmission standard	In conformance to RS-485/RS-422
Data transmission speed	Max. 115.2 kbps
Communication method	Full-duplex/Half-duplex
Maximum total extension distance	50 m
Protocol type	MELSOFT connection, MELSEC Communication protocol (1C/3C/4C frames), Non-protocol communication, MODBUS RTU, Inverter communication, N:N network, Parallel link Predefined protocol support
Insulation method	No insulation between the PLC.
Terminal resistors	Built-in (OPEN/110 Ω/330 Ω)
Connection method	European terminal block

3.7.2 Wiring

For the wiring, refer to the following manual.
→ **Refer to MELSEC iQ-F FX5 User's Manual (Communication).**

3.7.3 Terminal layouts

The terminals of the built-in RS-485 communication are arranged as follows:

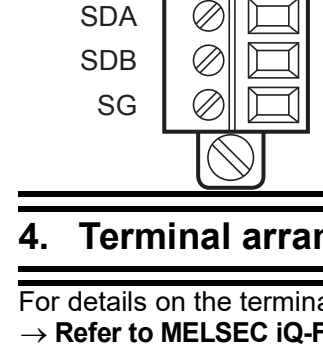

Signal name	Function
RDA	Receive data
RDB	
SDA	Send data
SDB	
SG	Signal ground

4. Terminal arrangement

For details on the terminal arrangement, refer to the following manual.
→ **Refer to MELSEC iQ-F FX5S/FX5UJ/FX5U/FX5UC User's Manual (Hardware).**

→

This manual confers no industrial property rights or any rights of any other kind, nor does it confer any patent licenses. Mitsubishi Electric Corporation cannot be held responsible for any problems involving industrial property rights which may occur as a result of using the contents noted in this manual.

Warranty
Exclusion of loss in opportunity and secondary loss from warranty liability
Regardless of the gratis warranty term, Mitsubishi shall not be liable for compensation to:
(1) Damages caused by any cause found not to be the responsibility of Mitsubishi.
(2) Loss in opportunity, lost profits incurred to the user by Failures of Mitsubishi products.
(3) Special damages and secondary damages whether foreseeable or not, compensation for accidents, and compensation for damages to products other than Mitsubishi products.
(4) Replacement by the user, maintenance of on-site equipment, start-up test run and other tasks.

⚠ For safe use

- This product has been manufactured as a general-purpose part for general industries, and has not been designed or manufactured to be incorporated in a device or system used in purposes related to human life.
- Before using the product for special purposes such as nuclear power, electric power, aerospace, medicine or passenger movement vehicles, consult with Mitsubishi Electric.
- This product has been manufactured under strict quality control. However when installing the product where major accidents or losses could occur if the product fails, install appropriate backup or failsafe functions in the system.

MITSUBISHI ELECTRIC CORPORATION
HEAD OFFICE : TOKYO BUILDING, 2-7-3 MARUNOUCHI, CHIYODA-KU, TOKYO 100-8310, JAPAN