JY997D36701G

MITSUBISHI ELECTRIC

Programmable Controller
MELSEC-F

FX3U-2HC

USER'S MANUAL

Manual Number	JY997D36701
Revision	G
Date	August 2025

This manual describes the part names, dimensions, mounting, wiring, and specifications of the product. Before use, read this manual and the manuals of all relevant products fully to acquire proficiency in handling and operating the product. Make sure to learn all the product information, safety information, and precautions. Store this manual in a safe place so that it can be taken out and read whenever necessary. Always forward it to the end user.

Registration:
The company names, system names and product names mentioned in this manual are either registered trademarks or trademarks of their respective companies.
In some cases, trademark symbols such as '™' or '®' are not specified in this manual.

Effective August 2025

Specifications are subject to change without notice.

Safety Precaution (Read these precautions before use.)

This manual classifies the safety precautions into two categories:

⚠WARNING and ⚠CAUTION.

⚠WARNING	Indicates that incorrect handling may cause hazardous conditions, resulting in death or severe injury.
⚠CAUTION	Indicates that incorrect handling may cause hazardous conditions, resulting in medium or slight personal injury or physical damage.

Depending on the circumstances, procedures indicated by ⚠CAUTION may also cause severe injury.
It is important to follow all precautions for personal safety.

Associated Manuals

Manual name	Manual No.	Description
FX3U Series User's Manual - Hardware Edition	JY997D16501	Explains the FX3U Series PLC specifications for I/O, wiring, installation, and maintenance.
FX3UC Series User's Manual - Hardware Edition	JY997D28701	Explains the FX3UC Series PLC specifications for I/O, wiring, installation, and maintenance.
FX3S/FX3G/FX3GC/ FX3U/FX3UC Series Programming Manual - Basic & Applied Instruction Edition	JY997D16601	Describes FX3S/FX3G/FX3GC/FX3U/ FX3UC Series PLC programming for basic/applied instructions and devices.
MELSEC iQ-F FX5S/ FX5UJ/FX5U/FX5UC User's Manual (Hardware)	SH-082452ENG	Describes the details of hardware of the FX5 CPU module, including performance specifications, wiring, installation, and maintenance.

How to obtain manuals
For product manuals or documents, consult with the Mitsubishi Electric dealer from who you purchased your product.

Certification of UL, cUL standards

The following product has UL and cUL certification.
UL, cUL File Number:E95239
Models: MELSEC FX3U series manufactured
from December 1st, 2009 FX3U-2HC

Compliance with EC directive (CE Marking)

This note does not guarantee that an entire mechanical module produced in accordance with the contents of this note will comply with the following standards.
Compliance to EMC directive and LVD directive for the entire mechanical module should be checked by the user / manufacturer. For more details please contact the local Mitsubishi Electric sales site.

Requirement for Compliance with EMC directive

The following products have shown compliance through direct testing (of the identified standards below) and design analysis (through the creation of a technical construction file) to the European Directive for Electromagnetic Compatibility (2014/30/EU) when used as directed by the appropriate documentation.

Attention
This product is designed for use in industrial applications.

Type: Programmable Controller (Open Type Equipment)
Models: MELSEC FX3U series manufactured
from December 1st, 2009 FX3U-2HC

Standard	Remark
EN61131-2:2007 Programmable controllers - Equipment requirements and tests	Compliance with all relevant aspects of the standard. **EMI** • Radiated Emission • Conducted Emission **EMS** • Radiated electromagnetic field • Fast transient burst • Electrostatic discharge • High-energy surge • Voltage drops and interruptions • Conducted RF • Power frequency magnetic field

Caution for EC Directive
- Installation in Enclosure
  Programmable controllers are open-type devices that must be installed and used within conductive control cabinets. Please use the programmable controller while installed within a conductive shielded control cabinet. Please secure the cabinet door to the control cabinet (for conduction). Installation within a control cabinet greatly affects the safety of the system and aids in shielding noise from the programmable controller.

Compliance with UKCA marking

The requirements for compliance with UKCA marking are the same as that with EC directive (CE marking).

1. Outline

1.1 Outline

The hardware high-speed counter block is a 2-channel high-speed counter. It is a special function block for the FX3U/FX3UC/FX5U/FX5UC PLC.

1.2 Major Features of the FX3U-2HC

- Differential-Line-Driver (AM26C31 or equivalent) and open collector output encoders are available for the FX3U-2HC.
- The FX3U-2HC has two outputs per channel. When the counter value coincides with an output compare value, the appropriate output is set ON. The output transistors are individually isolated to allow either sink or source connection methods.
- Various counter modes, such as 1-phase or 2-phase, 16-bit or 32-bit modes, can be selected using commands in the sequence program. Allow the FX3U-2HC unit to run only after setting these mode parameters.

1.3 Incorporated Items

Verify that the following product and items are included in the package:

Included Items	
FX3U-2HC	1 Unit
Special unit/block No. label	1 Sheet
Dust proof protection sheet	1 Sheet
Manuals [Japanese version]	1 manual
Manuals [English version] (This manual)	1 manual

1.4 External Dimensions, Part Names, and Terminal Layout

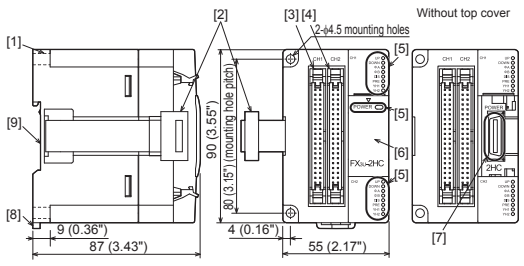

Weigh: Approx. 0.2 kg (0.44 lbs)

No.	Name
[1]	Direct mounting hole: 2 holes of ϕ4.5 (0.18") (mounting screw: M4 screw) Used when attaching FX3U-2HC directly.
[2]	Extension cable (PLC side) Used to connect this special function block to the FX3U/FX3UC main unit or an extension block.
[3]	CH1 connector
[4]	CH2 connector
[5]	Status LED (the upper side: CH1, the lower side: CH2) POWER (Green) — Power LED — ON when the 5V power supply is normally supplied from the PLC. UP (Red) — Up count LED DOWN (Red) — Down count LED — The respective LED is ON according to up/down count direction of the counter. ΦA (Red) — A phase input LED ΦB (Red) — B phase input LED — The respective LED is ON (flicker) according to ON/OFF of ΦA and ΦB input. DIS (Red) — DISABLE input LED PRE (Red) — PRESET input LED — The respective LED is ON/OFF according to ON/OFF of PRESET and DISABLE input. YH1 (Red) — YH1 output LED YH2 (Red) — YH2 output LED — The respective LED is ON/OFF according to status of YH1 and YH2 output.
[6]	Top cover
[7]	Extension connector (Extension side) Used to connect a FX3U extension block to the right of this special function block. Remove top cover for connecting.
[8]	DIN rail mounting hook
[9]	DIN rail mounting groove (DIN rail: DIN46277, 35mm (1.38") width)

FX3U-2HC connector arrangement

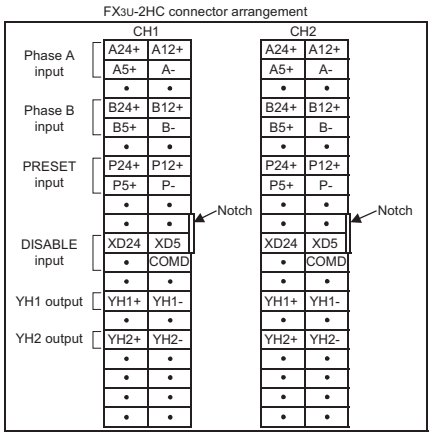

2. Installation, Connect to the PLC

INSTALLATION PRECAUTIONS ⚠WARNING

- Make sure to cut off all phases of the power supply externally before attempting installation or wiring work.
  Failure to do so may cause electric shock or damage to the product.

INSTALLATION PRECAUTIONS ⚠CAUTION

- Use the product within the generic environment specifications described in PLC main unit manual.
  Never use the product in areas with excessive dust, oily smoke, conductive dusts, corrosive gas (salt air, Cl_2, H_2S, SO_2, or NO_2), flammable gas, vibration or impacts, or expose it to high temperature, condensation, or rain and wind.
  If the product is used in such conditions, electric shock, fire, malfunctions, deterioration or damage may occur.

INSTALLATION PRECAUTIONS ⚠CAUTION

- Do not touch the conductive parts of the product directly.
  Doing so may cause device failures or malfunctions.
- Install the product on a flat surface.
  If the mounting surface is rough, undue force will be applied to the PC board, thereby causing nonconformities.
- When drilling screw holes or wiring, make sure cutting or wire debris does not enter the ventilation slits.
  Failure to do so may cause fire, equipment failures or malfunctions.
- Be sure to remove the dust proof sheet from the PLC's ventilation port when installation work is completed.
  Failure to do so may cause fire, equipment failures or malfunctions.
- Connect extension cables securely to their designated connectors.
  Loose connections may cause malfunctions.

2.1 Mounting

The product is mounted by the following method.
- DIN rail mounting
- Direct mounting (mounting screw: M4 screw)

For further information on installation arrangements, refer to the following manuals.
→ Refer to the FX3U Series User's Manual - Hardware Edition.
→ Refer to the FX3UC Series User's Manual - Hardware Edition.
→ Refer to the MELSEC iQ-F FX5S/FX5UJ/FX5U/FX5UC User's Manual (Hardware).

2.1.1 DIN Rail Mounting

The product can be mounted on a DIN rail (DIN46277, 35mm (1.38") width).
1) Fit the upper edge of the DIN rail mounting groove (fig. A) onto the DIN rail.
2) Press the product against the DIN rail.
   - An interval space of 1 to 2 mm (0.04" to 0.08") between each unit is necessary.

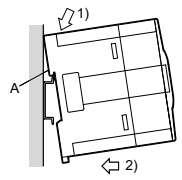

2.1.2 Direct Mounting (mounting screw: M4 screw)

The product can be installed directly with screws.
Refer to the External Dimensions (section 1.4) for the product's mounting hole pitch information.
An interval space between each unit of 1 to 2 mm (0.04" to 0.08") is necessary.

2.2 Connection to the PLC

A maximum of eight[*1*2] FX3U-2HC(s) are connectable with the main unit or the right side of the powered extension unit/block. A unit number of No.0 to No.7 is assigned based on the order in which special function units/blocks are attached to the main unit.
For connection to an FX3UC Series PLC or FX2NC Series PLC extension block, an FX2NC-CNV-IF or FX3UC-1PS-5V is required.
For connection to an FX5U or FX5UC PLC, an FX5-CNV-BUS or FX5-CNV-BUSC is required.

*1 Up to seven special function units/blocks in total can be connected to the FX3UC-32MT-LT(-2) PLC. Unit numbers assigned to special function units/blocks begins with No.1.

*2 Up to two special function units/blocks in total can be connected to the FX5U or FX5UC PLC. Unit numbers assigned to special function units/blocks begins with No.2.

For further information on installation arrangements, refer to the following manuals.
→ Refer to the FX3U Series User's Manual - Hardware Edition.
→ Refer to the FX3UC Series User's Manual - Hardware Edition.
→ Refer to the MELSEC iQ-F FX5S/FX5UJ/FX5U/FX5UC User's Manual (Hardware).

3. Wiring

WIRING PRECAUTIONS ⚠WARNING

- Make sure to cut off all phases of the power supply externally before attempting installation or wiring work.
  Failure to do so may cause electric shock or damage to the product.
- When drilling screw holes or wiring, make sure cutting or wire debris does not enter the ventilation slits.
  Failure to do so may cause fire, equipment failures or malfunctions.

WIRING PRECAUTIONS ⚠CAUTION

- Make sure to observe the following precautions in order to prevent any damage to the machinery or accidents due to abnormal data written to the PLC under the influence of noise:
  1) Do not bundle the main circuit line together with or lay it close to the main circuit, high-voltage line or load line. Otherwise, noise disturbance and/or surge induction are likely to take place. As a guideline, lay the control line at least 100mm (3.94") or more away from the main circuit or high-voltage lines.
  2) Ground the shield wire or shield of the shielded cable at two points; on the PLC and the device on other end. However, do not use common grounding with heavy electrical systems.

3.1 Connection to input/output connector

The input and output connectors conform to the MIL-C-83503.
→ For the input and output connectors pin assignment, refer to section 1.4.
1) Compliant connectors (commercially available connectors)
   Use a 40-pin (1-key) socket connector conforming to MIL-C-83503.
   Confirm in advance that the connectors do not interfere with other parts including connector covers.
2) Connectors for user-made input/output cables (available from Mitsubishi)
   Users should provide electric wires and a pressure bonding tool.

Model name and composition of input/output connector		Applicable electric wire (UL-1061 are recommended) and tool	
Our model name	Details of part (made by DDK Ltd.)	Electric wire size	Pressure bonding tool (made by DDK Ltd.)
FX-I/O-CON2-S for bulk wire (2-piece set)	Housing:HU-400S2-001 Solderless contact: HU-411S	AWG22 (0.3mm²)	357J-5538
FX-I/O-CON2-SA for bulk wire (2-piece set)	Housing:HU-400S2-001 Solderless contact: HU-411SA	AWG20 (0.5mm²)	357J-13963

3.2 Wiring

Note:
Make sure to properly wire in accordance with the encoder output specifications. Incorrect wiring may cause accidents or damage to the product.

3.2.1 NPN output encoders

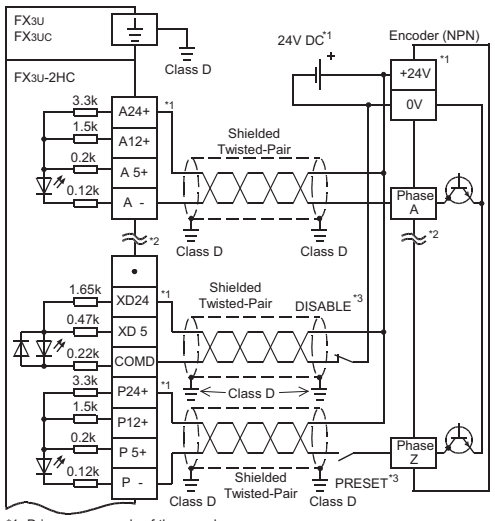

*1. Drive power supply of the encoder.
Use either 24V DC, 12V DC, or 5V DC according to the encoder type.
When connecting the A phase, the B phase, and the Z phase to the FX3U-2HC, connect to the power supply terminal.
When using 24V DC for PRESET or DISABLE signals, connect to the 24V DC (P24+, XD24) terminal
*2. Wiring of the B phase is the same as that of the A phase.
*3. This wiring is unnecessary when not using the PRESET function or the DISABLE function.

3.2.2 PNP output encoders

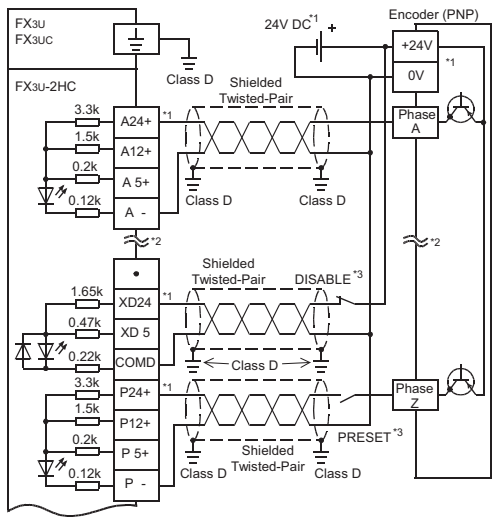

*1. Drive power supply of the encoder.
Use either 24V DC, 12V DC, or 5V DC according to the encoder type.
When connecting the A phase, the B phase, and the Z phase to the FX3U-2HC, connect to the power supply terminal.
When using 24V DC for PRESET or DISABLE signals, connect to the 24V DC (P24+, XD24) terminal.
*2. Wiring of the B phase is the same as that of the A phase.
*3. This wiring is unnecessary when not using the PRESET function or the DISABLE function.

3.2.3 Differential-Line-Driver output encoders

When applying the Differential-Line-Driver encoder (AM26C31 or equivalent) to the FX3U-2HC, connect the encoder output with the 5V DC terminal as shown in the figure below.

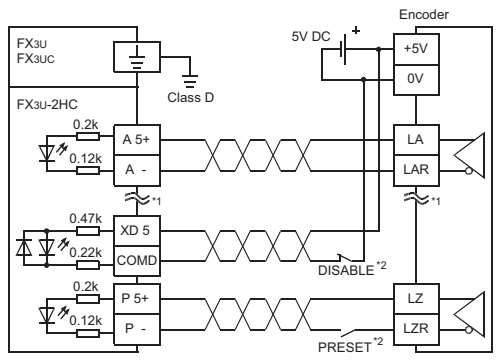

*1. Wiring of the B phase is the same as that of the A phase.
*2. This wiring is unnecessary when not using the PRESET function or the DISABLE function.

3.2.4 YH1, YH2 output wiring [Sink wiring]

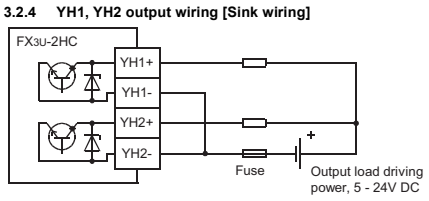

Caution
A protection fuse should be inserted at the output.
Use a load power supply capacity that is at least 2 times larger than the total rated fuse capacity.

3.2.5 YH1, YH2 output wiring [Source wiring]

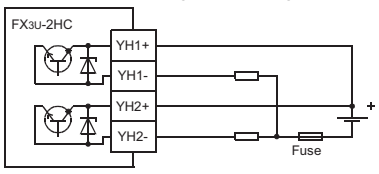

Caution
A protection fuse should be inserted at the output.
Use a load power supply capacity that is at least 2 times larger than the total rated fuse capacity.

3.3 Grounding

Grounding should be performed as stated below.
- The grounding resistance should be 100Ω or less.
- Independent grounding should be performed for best results.
  When independent grounding is not performed, perform "shared grounding" of the following figure.

→ For details, refer to the FX3U Series User's Manual - Hardware Edition.
→ For details, refer to the FX3UC Series User's Manual - Hardware Edition.
→ For details, refer to the MELSEC iQ-F FX5S/FX5UJ/FX5U/FX5UC User's Manual (Hardware).

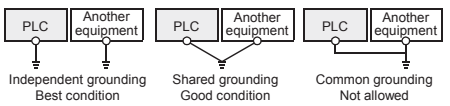

- The grounding wire size should be AWG 22-20 (0.3-0.5 mm²).
- The grounding point should be close to the PLC, and all grounding wires should be as short as possible.

4. Specifications

DESIGN PRECAUTIONS ⚠WARNING

- Make sure to have the following safety circuits outside of the PLC to ensure safe system operation even during external power supply problems or PLC failure. Otherwise, malfunctions may cause serious accidents.
  1) Most importantly, have the following: an emergency stop circuit, a protection circuit, an interlock circuit for opposite movements (such as normal vs. reverse rotation), and an interlock circuit (to prevent damage to the equipment at the upper and lower positioning limits).
  2) Note that when the PLC CPU detects an error, such as a watchdog timer error, during self-diagnosis, all outputs are turned off. Also, when an error that cannot be detected by the PLC CPU occurs in an input/output control block, output control may be disabled.
     External circuits and mechanisms should be designed to ensure safe machinery operation in such a case.
  3) Note that when an error occurs in a relay, triac or transistor output device, the output could be held either on or off.
     For output signals that may lead to serious accidents, external circuits and mechanisms should be designed to ensure safe machinery operation in such a case.

DESIGN PRECAUTIONS ⚠CAUTION

- Do not bundle the control line together with or lay it close to the main circuit or power line. As a guideline, lay the control line at least 100mm (3.94") or more away from the main circuit or power line.
  Noise may cause malfunctions.
- Install module so that excessive force will not be applied to I/O connectors.
  Failure to do so may result in wire damage/breakage or PLC failure.

4.1 General Specifications

The general specifications are equivalent to the PLC main unit.
(For general specifications, refer to the manual of the PLC main unit.)
Caution
When a dielectric withstand test of this product is performed, ground all terminals of this product and the PLC unit.

4.2 Power Supply Specifications

Item	Specifications
Units driving power	5V DC, 245mA (Internal power supply from main unit or extension power supply unit)
Allowable instantaneous power failure time	Operation can be continued upon occurrence of instantaneous power failure for 1 ms or less.

4.3 Performance Specifications

Item		Specification		
Input signal	Signal level (Selected by terminal connection)	Phase A, Phase B, PRESET	[A24+],[B24+], [P24+]	24V DC±10%, 8mA or less
			[A12+],[B12+], [P12+]	12V DC±10%, 8mA or less
			[A5+],[B5+], [P5+]	3.0V to 5.5V DC, 12.5mA or less
		DISABLE	[XD24]	10.8V to 26.4V DC, 15mA or less
			[XD5]	5V DC±10%, 8mA or less
	MAX. frequency	1-phase input	1 input	200kHz
			2 input	
		2-phase input	1 edge count	
			2 edge count	100kHz
			4 edge count	50kHz
	Pulse shape	t1(ON/OFF pulse): 1.5µs or more (at 200kHz) t2(Phase difference between A and B): 0.75µs or more (at 200kHz) t3(Overlap time): 0.7µs or more (at 200kHz) t4(Rise/fall time): 0.75µs or less PRESET(Z phase) input signal width: ON width 1.5µs or more, OFF width 30µs or more DISABLE (count prohibit) input signal width: ON width 100µs or more, OFF width 100µs or more		
Counting specification	Format	Automatic UP/DOWN However, when on 1-phase 1-input mode, UP/DOWN is determined by the following. • Hardware UP/DOWN: Up/down count is decided by OFF/ON of the A-phase input terminal. • Software UP/DOWN: Up/down count is decided by the current value (K0/K1) of BFM #1, #41.		
	Range	When 32-bit is specified: -2,147,483,648 to +2,147,483,647 When 16-bit is specified: 0 to 65,535 (upper limit is set up by BFM #3, #2, #43, #42.)		
	Comparison Type	When the present value and the comparison set value of the counter are equal, the comparison output is set (ON) within 30 µs and is cleared (OFF) within 100 µs by the reset command.		
Output signal	Types of outputs	YH1+: transistor output for YH1 output YH1-: transistor output for YH1 output YH2+: transistor output for YH2 output YH2-: transistor output for YH2 output		
	Output capacity	5V ~ 24V DC, 0.5A		
I/O occupation		8 points (can be either inputs or outputs)		

4.4 Applicable PLC

Model name	Applicability
FX3U Series PLC	Ver. 2.20 and later*3
FX3UC Series PLC*1	Ver. 2.20 and later*3
FX5U PLC*2	From first production
FX5UC PLC*2	From first production

*1 An FX2NC-CNV-IF or FX3UC-1PS-5V is necessary to connect the FX3U-2HC with the FX3UC PLC.
*2 An FX5-CNV-BUS or FX5-CNV-BUSC is necessary to connect the FX3U-2HC with the FX5U/FX5UC PLC.
*3 The version number can be checked by reading the last three digits of device D8001/D8101.

5. Buffer Memories (BFM)

5.1 Buffer memory List

Note:

1) When writing to BFM #0 (CH1 counter mode), BFM #1 to #27 and #29 bit1 to 6 will be initialized. When writing to BFM #40 (CH2 counter mode), BFM #41 to #67 and #29 bit10 to 15 will be initialized.
   When setting the counter mode, use a TOP (pulsed) instruction, or M8002 (initial pulse) to drive the TO instruction. (The continuous operation type cannot be used.)
2) Read/Write of 16 bit data
   When using a positive value between K32,768 and K65,535 with 16 bit counters, read/writes of data, such as the current value, ring length, preset data, YH1/YH2 compare value, maximum count value and the minimum count value should use the 32-bit forms of FROM/TO instructions ((D) FROM, (D) TO).
3) Read/write of 32 bit data
   The usage of a 32-bit FROM/TO instruction is recommended.
   In the event that a 16-bit FROM/TO instruction is used, the following cases need to be considered.
   - If the writing order is low word first and then high word, the 32 bit data will be written normally. Data becomes valid after both low and high words are written.
   - In the event that data is not written in the order low word first and then high word, the error bit b7 of BFM #29 turns ON.

BFM #		Description		Default	BFM Access
CH1	CH2				
BFM #0	BFM #40	Counter mode (Setting range: K0 to K11)		K0	R/W
BFM #1	BFM #41	DOWN/UP command (1-phase 1-input mode [S/W UP/DOWN] only)		K0	R/W
BFM #2	BFM #42	Ring length	Lower	K65536	R/W
BFM #3	BFM #43		Upper		R/W
BFM #4	BFM #44	Command		K0	R/W
BFM #5 ~ #9	BFM #45 ~ #49	Not used		-	-
BFM #10	BFM #50	Preset data	Lower	K0	R/W
BFM #11	BFM #51		Upper		R/W
BFM #12	BFM #52	YH1 compare value	Lower	K32767	R/W
BFM #13	BFM #53		Upper		R/W
BFM #14	BFM #54	YH2 compare value	Lower	K32767	R/W
BFM #15	BFM #55		Upper		R/W
BFM #16 ~ #19	BFM #56 ~ #59	Not used		-	-
BFM #20	BFM #60	Counter current value	Lower	K0	R/W
BFM #21	BFM #61		Upper		R/W
BFM #22	BFM #62	Maximum count value	Lower	K0	R/W
BFM #23	BFM #63		Upper		R/W
BFM #24	BFM #64	Minimum count value	Lower	K0	R/W
BFM #25	BFM #65		Upper		R/W
BFM #26	BFM #66	Compare results		-	R
BFM #27	BFM #67	Terminal status		-	R
BFM #28		Not used		-	-
BFM #29		Error status		-	R
BFM #30		Model identification code: K4020		K4020	R
BFM #31 ~ 39		Not used		-	-
BFM #68 ~ 32767		Not used		-	-

5.2 Details of buffer memories

5.2.1 Counter mode [BFM #0 (CH1), #40 (CH2)]

The counter mode is shown in the upper right table. (Default value: K0)

Note:

When writing to BFM #0 (CH1 counter mode), BFM #1 to #27 and #29 bit1 to 6 will be initialized. When writing to BFM #40 (CH2 counter mode), BFM #41 to #67 and #29 bit10 to 15 will be initialized. Please perform the setting of other BFM(s) after the setting of the counter mode (BFM #0, #40).
When setting the counter mode, use a TOP (pulsed) instruction, or M8002 (initial pulse) to drive the TO instruction. (The continuous operation type cannot be used.)

Count modes		32 bits	16 bits	Reference
2-phase input (phase difference pulse)	1 edge count	K0	K1	1), 2)
	2 edge count	K2	K3	1), 3)
	4 edge count	K4	K5	1), 4)
1-phase 2-input (add/subtract pulse)		K6	K7	1), 5)
1-phase 1-input	Hardware UP/DOWN	K8	K9	1), 6)
	Software UP/DOWN	K10	K11	1), 7)

1) 16/32-bit counter modes
   a) 32-bit counter modes
      Modes: K0, K2, K4, K6, K8, K10
      A 32-bit binary counter which executes UP/DOWN counting will change from the lower limit value to the upper limit value or the upper limit value to the lower limit value when overflow occurs. Both the upper and lower limit values are fixed values: the upper limit value is +2,147,483,647, and the lower limit value is -2,147,483,648.

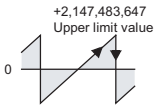

   b) 16-bit counter modes
      Modes: K1, K3, K5, K7, K9, K11
      A 16-bit binary counter handles only positive values from 0 to 65,535. Changes to zero from the upper limit value or to the upper limit value from zero when overflow occurs; the upper limit value is determined by BFMs #3 and #2 (CH1), #43 and #42 (CH2).

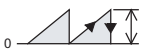

2) 2-phase counter [1 edge-count] (K0, K1)

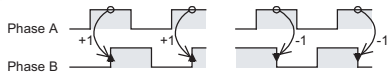

Phase B input OFF → ON while phase A input ON Count up by 1.
Phase B input ON → OFF while phase A input ON Count down by 1.

3) 2-phase counter [2 edge-count] (K2, K3)

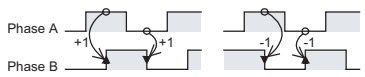

Phase B input OFF → ON (ON → OFF) while phase A input ON (OFF) Count up by 1.
Phase B input ON → OFF (OFF → ON) while phase A input ON (OFF) Count down by 1.

4) 2-phase counter [4 edge-count] (K4, K5)

5) 1-phase 2-input counter (K6, K7)

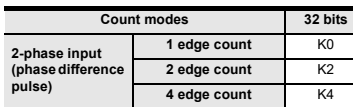

6) 1-phase 1-input counter [Hardware UP/DOWN] (K8, K9)

7) 1-phase 1-input counter [Software UP/DOWN] (K10, K11)

5.2.2 DOWN/UP command [BFM #1 (CH1), #41 (CH2)]

When using the 1-phase 1-input counter [Software UP/DOWN] (counter mode: K10, K11), set the count direction by the current value of BFM #1 or BFM #41. (Default value: K0)

→ **For the operation, refer to the Subsection 5.2.1 7)**

Count Direction	Setting Value
Up count	K0
Down count	K1

5.2.3 Ring length [BFM #3, #2 (CH1), #43, #42 (CH2)]

When setting the upper limit value of the 16 bit counters, the setting range is K2 to K65536. (Default value: K65536)
Please use the DTO instruction and write data as 32 bit data.
When ring length K100 is specified, the current value of the counter is changed as shown the following figure, and the upper limit value is set to 99.

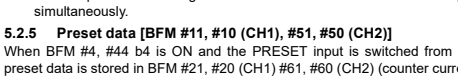

The ring length cannot be changed while the count is permitted. Change the ring length while the count is prohibited.

5.2.4 Command [BFM #4 (CH1), #44 (CH2)]

Bit No.	Setting Value	
	OFF (0)	ON (1)
b0*1	Count prohibit	Count permit
b1*2	YH1 compared output prohibit	YH1 compared output permit
b2*3	YH2 compared output prohibit	YH2 compared output permit
b3*4	YH1/YH2 independent action	Mutual reset action
b4*5	Preset prohibit	Preset permit
b5*6	No action if PLC is set from RUN to STOP (FX2N-1HC compatibility mode)	Counter is stopped and reset if PLC is set from RUN to STOP
b6, b7	Not used	
b8*7	No action	Error flag reset
b9*8	No action	YH1 output reset
b10*8	No action	YH2 output reset
b11*8	No action	YH1 output set
b12*8	No action	YH2 output set
b13 ~ b15	Not used	

*1 When b0 is set to ON and the DISABLE input terminal to OFF, the counter is permitted to start counting input pulses.

*2 Unless b1 is set to ON, YH1 (compared output) does not turn ON.

*3 Unless b2 is set to ON, YH2 (compared output) does not turn ON.

*4 When b3=ON, YH2 output is reset if YH1 output is set, and YH1 output is reset if YH2 output is set. When b3=OFF, YH1 and YH2 output act independently, and do not reset each other.
The mutual reset action becomes valid only when both the YH1 comparison output and the YH2 comparison output are permitted (b1, b2=ON).

*5 When b4=OFF, the preset function using the PRESET input terminal is disabled.

*6 When bit 5 is set to ON, the counter will be stopped and reset and the outputs YH1 and YH2 will be switched OFF when the PLC is set from RUN to STOP.

*7 When bit 8 in BFM #4 is set to ON, the error flags bit 1 to 6 in BFM #29 will be reset. The shared error flags (bit 7 and bit 8) will also be reset if no error on the other counter channel requires them to remain ON. When bit 8 in BFM #44 is set to ON, the error flags bit 10 to 15 in BFM #29 will be reset. The shared error flags (bit 7 and bit 8) will also be reset if no error on the other counter channel requires them to remain ON. After clearing BFM #29 error flags this flag will be reset automatically.

*8 b9 to b12 can perform a forced set of the YH1 output or the YH2 output, and reset. The output is not changed when the forced set and reset are performed simultaneously.

5.2.5 Preset data [BFM #11, #10 (CH1), #51, #50 (CH2)]

When BFM #4, #44 b4 is ON and the PRESET input is switched from OFF to ON, preset data is stored in BFM #21, #20 (CH1) #61, #60 (CH2) (counter current value).

5.2.6 YH1 compare value [BFM #13, #12 (CH1), #53, #52 (CH2)], YH2 compare value [BFM #15, #14 (CH1), #55, #54 (CH2)]

- The comparison set value for the output currently written here and the present value of the counter are measured, and when the comparison result is equal, the YH1 output or the YH2 output is set to ON within 30 μs.
- Output occurs when the current value becomes equal to the compare value but only if b1 and b2 of BFM #4, #44 are ON. Once an output is set, it remains ON until it is reset by b9 or b10 of BFM #4, #44.

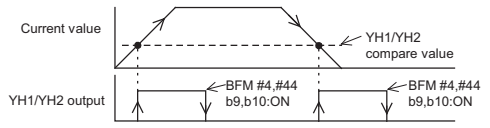

If b3 of BFM #4, #44 is ON, however, one of the outputs is reset when the other is set. (refer to the following figure)

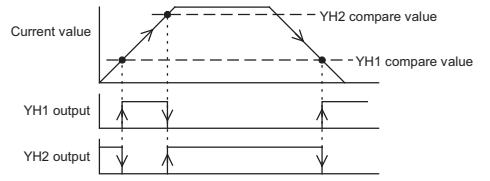

5.2.7 Counter current value [BFM #21, #20 (CH1), #61, #60 (CH2)]

The current value of the counter can be read by the PLC. It will not be an accurate value during high-speed operations because of the communication delay. The current value of the counter can be forcibly changed by writing a 32-bit value into the appropriate BFMs from the PLC.

5.2.8 Maximum count value [BFM #23, #22 (CH1), #63, #62 (CH2)], Minimum count value [BFM #25, # 24 (CH1), #65, #64 (CH2)]

These BFM store the maximum and minimum value reached by the counter. If the power is turned off, the stored data is cleared. Any value written to maximum and minimum count value in 16 bit counter mode which is exceeding the valid range (0 <= value < ring length) will be automatically adjusted. Values < 0 will be adjusted to 0, values >= ring length will be adjusted to "ring length" - 1.

5.2.9 Compare results [BFM #26 (CH1), #66 (CH2)]

Bit No.	Target output	OFF (0)	ON (1)
b0	YH1	Compare value ≤ current value	Compare value > current value
b1		Compare value ≠ current value	Compare value = current value
b2		Compare value ≥ current value	Compare value < current value
b3	YH2	Compare value ≤ current value	Compare value > current value
b4		Compare value ≠ current value	Compare value = current value
b5		Compare value ≥ current value	Compare value < current value
b6 ~ b15	Not used		

5.2.10 Terminal status [BFM #27 (CH1), #67 (CH2)]

Bit N0.	Signal Name	OFF (0)	ON (1)
b0	PRESET input	OFF	ON
b1	DISABLE input	OFF	ON
b2	YH1 output	OFF	ON
b3	YH2 output	OFF	ON
b4 ~ b15	Not used		

5.2.11 Error status [BFM #29]

Bit N0.	Error Status	
b0	Set when any of b1 to b15 is ON.	
b1	Set when the value of the ring length is written incorrectly. (CH1)	• Outside of K2 to K65,536 • Written while CH1 is in 32-bit counter mode • Ring length changed while counter running
b2	Set when the preset value is written incorrectly. (CH1)	Value is other than "K0 to ring length-1" for 16-bit counters.
b3	Set when the compare value is written incorrectly. (CH1)	Value is other than "K0 to ring length-1" for 16-bit counters.
b4	Set when the current value is written incorrectly. (CH1)	
b5	Set when the counter overflows the upper limit. (CH1)	When the upper or lower limit is exceeded on a 32-bit counter.
b6	Set when the counter underflows the lower limit. (CH1)	
b7	Set when the FROM/TO command is used incorrectly.*1	
b8	Set when the counter mode (BFM #0, #40) is written incorrectly.	Except K0 to K11
b9	Hardware error (UP, DOWN LED turn ON)	
b10	Set when the value of the ring length is written incorrectly. (CH2)	• Outside of K2 to K65,536 • Written while CH2 is in 32-bit counter mode • Ring length changed while counter running
b11	Set when the preset value is written incorrectly. (CH2)	Value is other than "K0 to ring length-1" for 16-bit counters.
b12	Set when the compare value is written incorrectly. (CH2)	
b13	Set when the current value is written incorrectly. (CH2)	
b14	Set when the counter overflows the upper limit. (CH2)	When the upper or lower limit is exceeded on a 32-bit counter.
b15	Set when the counter underflows the lower limit. (CH2)	

*1 In the following case, BFM #29 b7 turns on.
- write in a BFM that is not used
- writing to read only BFMs
- accessing 32 bit BFMs using the FROM/TO command in the wrong order

Error status in the FX3U-2HC can be checked by reading the contents of b0 to b15 of BFM #29 to auxiliary relays of the PLC.
The error flag of b1 to b8 is reset-table with ON of BFM #4 b8. The error flag of b7, b8 and b10 to b15 is resettable with ON of BFM #44 b8. The error flags in BFM #29 can also be reset by writing 0 to it. The Hardware error flag (bit 9 of BFM #29) can not be cleared.

5.2.12 Model identification code [BFM #30]

This BFM stores the identification number for the FX3U-2HC.
The identification number for the FX3U-2HC unit is K4020.
By reading this identification number, the user may create built-in checking routines to check whether the physical position of the FX3U-2HC matches that of the software.

6. Example Program

Please use the following program as a guide whenever you use the FX3U-2HC unit. Other instructions to read the current value of the counter, status etc. can be added as required.

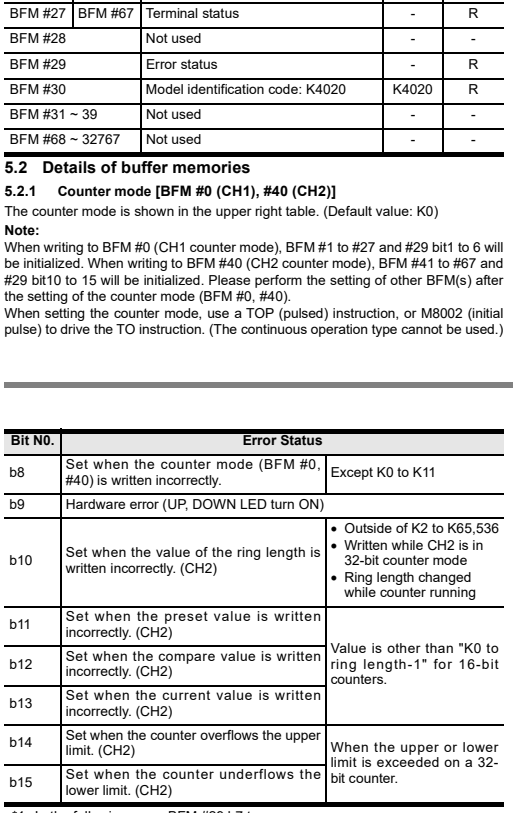

Counting only occurs if the count permit is set to ON. Also, outputs will not be set from the counting process at all if the relevant output prohibit is set in the command register. Please reset error flags and YH1/YH2 output before you start. The mutual reset and preset initialization commands can be used as required.

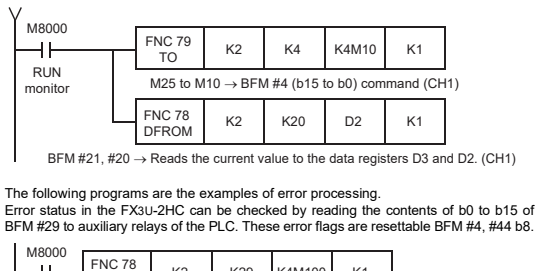

The following programs are the examples of error processing.
Error status in the FX3U-2HC can be checked by reading the contents of b0 to b15 of BFM #29 to auxiliary relays of the PLC. These error flags are resettable BFM #4, #44 b8.

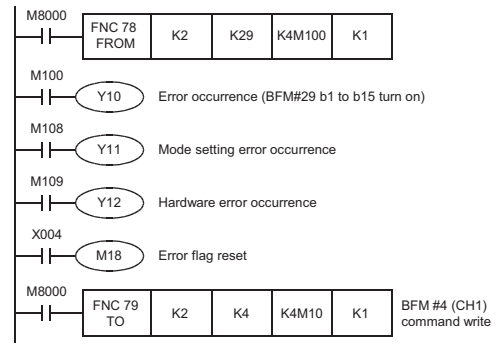

7. Preliminary checks

1) Check that the I/O wiring and extension cable of the FX3U-2HC are properly connected.
2) The FX3U-2HC occupies 8 points of I/O on the FX3U, FX3UC expansion bus. The 8 points can be allocated from either inputs or outputs.
   5V DC 245mA power is supplied from the main or extension power supply units for the FX3U-2HC. Check that there is no power overload from this and other extension blocks.
3) The counter works correctly only when data such as the counter mode (set with a pulse command), the TO command, the compare value, etc. are appropriately specified. Remember to initialize the count (BFM #4, #44 b0), preset (BFM #4, #44 b4), and output (BFM #4, #44 b2, b1) prohibits. The YH1/YH2 outputs are reset during start.

Note:

Inputting pulses higher than the maximum frequency may cause miscounting in the FX3U-2HC or a FROM/TO error in the PLC main unit.

8. Diagnostics

STARTUP AND MAINTENANCE PRECAUTIONS ⚠CAUTION

- Do not disassemble or modify the PLC.
  Doing so may cause fire, equipment failures, or malfunctions.
  *For repair, contact your local Mitsubishi Electric representative.
- Do not drop the product or exert strong impact to it.
  Doing so may cause damage.

DISPOSAL PRECAUTIONS ⚠CAUTION

- Please contact a certified electronic waste disposal company for the environmentally safe recycling and disposal of your device.

TRANSPORTATION AND STORAGE PRECAUTIONS ⚠CAUTION

- The product is a precision instrument. During transportation, avoid impacts larger than those specified in the general specifications by using dedicated packaging boxes and shock-absorbing palettes. Failure to do so may cause failures in the product. After transportation, verify operation of the product and check for damage of the mounting part, etc.

1) The following LEDs on the main panel of the FX3U-2HC may help you to troubleshoot the unit.
   a) ΦA, ΦB:
      Goes on/off as ΦA, ΦB input turn ON/OFF. It can be checked by rotating the encoder slowly.
   b) UP, DOWN:
      Lights up to indicate whether the counter is going up (UP) or down (DOWN).
   c) PRE, DIS:
      The appropriate LED lights up when the PRESET (PRE) terminal or the DISABLE (DIS) terminal is ON.
   d) YH1, YH2:
      The appropriate LED lights up when YH1/YH2 output is turned on.
2) You can check the error status by reading the content of BFM #29 to the PLC.

→ **For error contents, refer to the Subsection 5.2.11**

「电器电子产品有害物质限制使用标识要求」的表示方式

Note: This symbol mark is for China only.

含有有害6物质的名称，含有量，含有部品
本产品中所含有的有害6物质的名称，含有量，含有部品如下表所示。

产品中有害物质的名称及含量

部件名称		有害物质					
		铅 (Pb)	汞 (Hg)	镉 (Cd)	六价铬 (Cr (VI))	多溴联苯 (PBB)	多溴二苯醚 (PBDE)
可编程控制器	外壳	○	○	○	○	○	○
	印刷基板	×	○	○	○	○	○

本表格依据SJ/T 11364的规定编制。

○:表示该有害物质在该部件所有均质材料中的含量均在GB/T 26572规定的限量要求以下。
×:表示该有害物质至少在该部件的某一均质材料中的含量超出GB/T 26572规定的限量要求。

基于中国标准法的参考规格:GB/T15969.2

9. Reference (CH1 System Block Diagram)

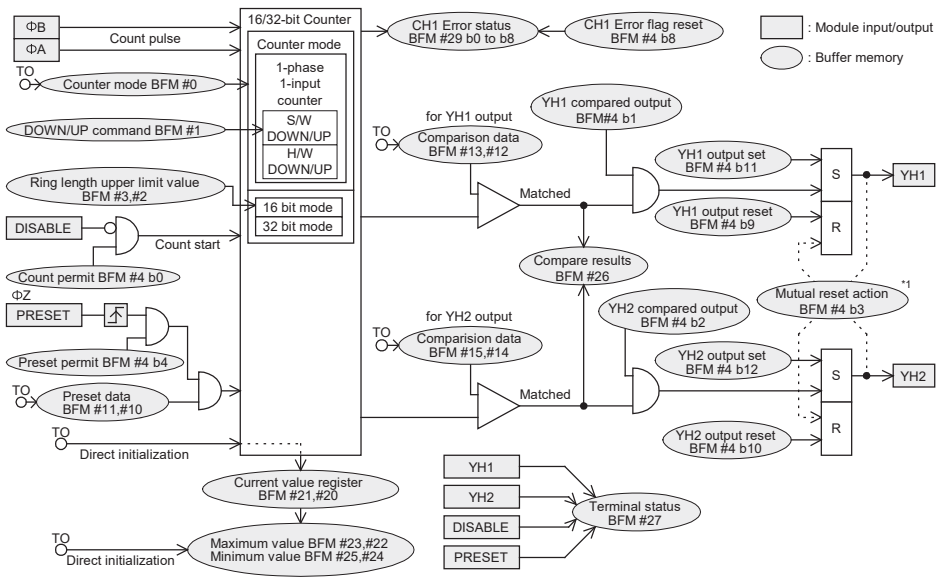

*1 The mutual reset action becomes valid only when both the YH1 comparison output and the YH2 comparison output are permitted (BFM #4 b1, b2=ON).

This manual confers no industrial property rights or any rights of any other kind, nor does it confer any patent licenses. Mitsubishi Electric Corporation cannot be held responsible for any problems involving industrial property rights which may occur as a result of using the contents noted in this manual.

Warranty
Exclusion of loss in opportunity and secondary loss from warranty liability
Regardless of the gratis warranty term, Mitsubishi shall not be liable for compensation to:
(1) Damages caused by any cause found not to be the responsibility of Mitsubishi.
(2) Loss in opportunity, lost profits incurred to the user by Failures of Mitsubishi products.
(3) Special damages and secondary damages whether foreseeable or not, compensation for accidents, and compensation for damages to products other than Mitsubishi products.
(4) Replacement by the user, maintenance of on-site equipment, start-up test run and other tasks.

⚠ For safe use

- This product has been manufactured as a general-purpose part for general industries, and has not been designed or manufactured to be incorporated in a device or system used in purposes related to human life.
- Before using the product for special purposes such as nuclear power, electric power, aerospace, medicine or passenger movement vehicles, consult with Mitsubishi Electric.
- This product has been manufactured under strict quality control. However when installing the product where major accidents or losses could occur if the product fails, install appropriate backup or failsafe functions in the system.

MITSUBISHI ELECTRIC CORPORATION
HEAD OFFICE : TOKYO BUILDING, 2-7-3 MARUNOUCHI, CHIYODA-KU, TOKYO 100-8310, JAPAN