MITSUBISHI ELECTRIC

GRAPHIC OPERATION TERMINAL

GOT2000

GOT2000 Series
User's Manual (Hardware)

-GT27 model
-GT25 model
-GT25 open frame model
-GT25 wide model
-GT25 rugged model
-GT23 model
-GT21 model
-GT21 wide model
-Handy GOT

SAFETY PRECAUTIONS

Be sure to read these instructions before using this product.

Before using the product, read this manual and the relevant manuals introduced in this manual carefully and handle the product properly with full attention to safety.

Note that these precautions apply only to this product.

In this manual, the safety instructions are ranked as "WARNING" and "CAUTION".

⚠ WARNING	**Indicates that incorrect handling may cause hazardous conditions, resulting in death or severe injury.**
⚠ CAUTION	**Indicates that incorrect handling may cause hazardous conditions, resulting in minor or moderate injury or property damage.**

Note that failure to observe the ⚠ CAUTION level instructions may also lead to serious results depending on the circumstances.

Be sure to observe the instructions of both levels to ensure personal safety.

Please keep this manual in accessible place and be sure to forward it to the end user.

[DESIGN PRECAUTIONS]

⚠WARNING

- Some failures of the GOT, communication unit or cable may keep the outputs on or off.
  Some failures of a touch panel may cause malfunction of the input objects such as a touch switch.
  An external monitoring circuit should be provided to check for output signals which may lead to a serious accident.Not doing so can cause an accident due to false output or malfunction.
- Do not use the GOT as the warning device that may cause a serious accident.
  An independent and redundant hardware or mechanical interlock is required to configure the device that displays and outputs serious warning.
  Failure to observe this instruction may result in an accident due to incorrect output or malfunction.
- When the GOT backlight has a failure, the GOT status will be as follows. Failure to observe this instruction may result in an accident due to incorrect output or malfunction.
  [GT27, GT25, GT23]
  The POWER LED blinks (orange/blue), the display section dims, and inputs by a touch switch are disabled.
  [GT2105-Q]
  The POWER LED blinks (orange/blue), and the display section dims. However, inputs by a touch switch are still available.
  [GT2107-W, GT2104-R, GT2104-P, GT2103-P]
  The display section dims. However, inputs by a touch switch are still available.
  Even if the display section dims, inputs by a touch switch may still be available. This may cause an unintended operation of the touch switch.
  For example, if an operator assumes that the display section has dimmed because of the screen save function and touches the display section to cancel the screen save, a touch switch may be activated.
  The GOT backlight failure can be checked with a system signal of the GOT. (This system signal is not available on GT2107-W, GT2104-R, GT2104-P, and GT2103-P.)

[DESIGN PRECAUTIONS]

⚠WARNING

- The display section of the GOT is an analog-resistive type touch panel.
  When multiple points of the display section are touched simultaneously, an accident may occur due to incorrect output or malfunction.
  [GT27]
  Do not touch three points or more simultaneously on the display section. Doing so may cause an accident due to an incorrect output or malfunction.
  [GT25, GT23, GT21]
  Do not touch two points or more simultaneously on the display section.
  Doing so may cause a touch switch near the touched points to operate unexpectedly, or may cause an accident due to an incorrect output or malfunction.
- When programs or parameters of the controller (such as a PLC) that is monitored by the GOT are changed, be sure to reset the GOT, or turn on the unit again after shutting off the power as soon as possible.
  Not doing so can cause an accident due to false output or malfunction.
- If a communication fault (including cable disconnection) occurs during monitoring on the GOT, communication between the GOT and PLC CPU is suspended and the GOT becomes inoperative.
  ◇For bus connection (GT27 and GT25 only): The GOT becomes inoperative. Power on the PLC CPU again to reestablish communication.
  ◇For other than bus connection: The GOT becomes inoperative.
  A system where the GOT is used should be configured to perform any significant operation to the system by using the switches of a device other than the GOT on the assumption that a GOT communication fault will occur.
  Not doing so can cause an accident due to false output or malfunction.
- To maintain the security (confidentiality, integrity, and availability) of the GOT and the system against unauthorized access, DoS[*1] attacks, computer viruses, and other cyberattacks from unreliable networks and devices via network, take appropriate measures such as firewalls, virtual private networks (VPNs), and antivirus solutions.
  Mitsubishi Electric shall have no responsibility or liability for any problems involving GOT trouble and system trouble by unauthorized access, DoS attacks, computer viruses, and other cyberattacks.
  *1 DoS: A denial-of-service (DoS) attack disrupts services by overloading systems or exploiting vulnerabilities, resulting in a denial-of-service (DoS) state.

[DESIGN PRECAUTIONS]

⚠CAUTION

- Do not bundle the control and communication cables with main-circuit, power or other wiring.
  Run the above cables separately from such wiring and keep them a minimum of 100mm apart.
  Not doing so noise can cause a malfunction.
- Do not press the GOT display section with a pointed material as a pen or driver.
  Doing so can result in a damage or failure of the display section.
- When the GOT connects to an Ethernet network, the IP address setting is restricted according to the system configuration.
  When a GOT1000 series model is on an Ethernet network, do not set the IP address 192.168.0.18 for the GOT and the controller on this network.
  Doing so can cause IP address duplication at the GOT startup, adversely affecting the communication of the device with the IP address 192.168.0.18.
  The operation at the IP address duplication depends on the devices and the system.
- When using the Ethernet interfaces, set an IP address for each interface to access a different network.
- Turn on the controllers and the network devices to be ready for communication before they communicate with the GOT.
  Failure to do so can cause a communication error on the GOT.
- When the GOT is subject to shock or vibration, or some colors appear on the screen of the GOT, the screen of the GOT might flicker.

[MOUNTING PRECAUTIONS]

⚠WARNING

- Be sure to shut off all phases of the external power supply used by the system before mounting or removing the GOT main unit to/from the panel.
  Not doing so can cause the unit to fail or malfunction.
- Be sure to shut off all phases of the external power supply used by the system before mounting or removing the option unit onto/from the GOT. (GT27, GT25 Only)

[MOUNTING PRECAUTIONS]

⚠CAUTION

- Use the GOT in the environment that satisfies the general specifications described in this manual. Not doing so can cause an electric shock, fire, malfunction or product damage or deterioration.
- When mounting the GOT to the control panel, tighten the mounting screws in the specified torque range with Phillips cross-head screwdriver No. 2.
  Undertightening can cause the GOT to drop, short circuit or malfunction.
  Overtightening can cause a drop, short circuit or malfunction due to the damage of the screws or the GOT.
  The specified torque range is as follows.
  [GT27, GT25-W, GT2512-S, GT2510-V, GT2508-V, GT23, GT2107-W]
  Specified torque range (0.36 N•m to 0.48 N•m)
  [GT2505-V, GT2105-Q]
  Specified torque range (0.30 N•m to 0.50 N•m)
  [GT2104-R, GT2104-P, GT2103-P]
  Specified torque range (0.20 N•m to 0.25 N•m)
- When mounting a unit on the GOT, tighten the mounting screws in the specified torque range.
  Undertightening can cause the GOT to drop, short circuit or malfunction.
  Overtightening can cause a drop, failure or malfunction due to the damage of the screws or unit.
  The specified torque range is as follows.
  [GT27, GT25 (except GT25-W)]
  When loading the communication unit or option unit other than wireless LAN unit to the GOT, fit it to the connection interface of the GOT and tighten the mounting screws in the specified torque range (0.36 N•m to 0.48 N•m) with a Phillips-head screwdriver No. 2.
  When loading the wireless LAN unit to the GOT, fit it to the side interface of GOT and tighten the mounting screws in the specified torque range (0.10 N•m to 0.14 N•m) with a Phillips-head screwdriver No. 1.
  When the GOT is installed vertically, its side interface is positioned on the bottom.
  To prevent the falling of the wireless LAN communication unit from the side interface, install or remove the unit while holding it with hands.
  [GT25-W]
  When mounting the wireless LAN communication unit on the GOT, fit it to the wireless LAN communication unit interface and tighten the mounting screws in the specified torque range (0.10 N•m to 0.14 N•m) with a Phillips-head screwdriver No.1.
  [GT2103-P]
  When mounting the SD card unit on the GOT, fit it onto the GOT rear face and tighten the tapping screws in the specified torque range (0.3 N•m to 0.6 N•m) with a Phillips-head screwdriver No. 2.
- When closing the USB environmental protection cover, note the following points to ensure the IP rating.
  [GT27, GT25 (except GT25-W and GT2505-V)]
  Push the [PUSH] mark on the latch firmly to fix the cover to the GOT.
  [GT2512-WX, GT2510-WX, GT2507-W, GT2505-V, GT2107-W]
  Push the USB mark on the latch firmly to fix the cover to the GOT.
  [GT2105-Q]
  Tighten the lower fixing screws of the cover in the specified torque range (0.36 N•m to 0.48 N•m) to fix the cover to the GOT.

[MOUNTING PRECAUTIONS]

⚠CAUTION

- Remove the protective film of the GOT.
  When the user continues using the GOT with the protective film, the film may not be removed.
  In addition, for the models equipped with the human sensor function, using the GOT with the protective film may cause the human sensor not to function properly
- For GT2512F-S, GT2510F-V, and GT2508F-V, attach an environmental protection sheet dedicated to the open frame model (sold separately) to the display section.
  Or, attach a user-prepared environmental protection sheet.
  Not doing so may damage or soil the GOT or cause foreign matter to enter the GOT, resulting in a failure or malfunction.
- When installing the supplied fittings on GT2512F-S, GT2510F-V, or GT2508F-V, tighten screws in the specified torque range (0.8 N•m to 1.0 N•m).
  Meld studs on the control panel to fasten the fittings.
  The studs must have strength adequate to withstand a tightening torque of 0.9 N•m or more.
  Make sure that no foreign matter such as welding waste is at and around the bases of the studs.
  Tighten nuts on the studs in the specified torque range (0.8 N•m to 0.9 N•m) with a wrench for M4 nuts.
  Undertightening a screw or nut may cause the GOT to drop, short-circuit, or malfunction.
  Overtightening a screw or nut may damage it or the GOT, causing the GOT to drop, short-circuit, or malfunction.
- Do not operate or store the GOT in the environment exposed to direct sunlight, rain, high temperature, dust, humidity, or vibrations.
- Although GT2507T-W is ruggedized for environments such as UV rays, temperatures and vibrations, its operation is not guaranteed in all conditions and environments.
  Make sure to use or store the GOT in an appropriate environment.
- When using the GOT in the environment of oil or chemicals, use the protective cover for oil.
  Failure to do so may cause failure or malfunction due to the oil or chemical entering into the GOT.
- Do not operate the GOT with its display section frozen.
  The water droplets on the display section may freeze at a low temperature.
  Touch switches and other input objects may malfunction if the display section is frozen.

[WIRING PRECAUTIONS]

⚠WARNING

- Be sure to shut off all phases of the external power supply used by the system before wiring.
  Failure to do so may result in an electric shock, product damage or malfunctions.
- After installation, wiring, or other work, make sure to attach the back cover to the Handy GOT before turning on the power and starting operation.
  Not doing so may cause an electrical shock.
- The Handy GOT is designed to operate on DC power.
  Supply power to the power supply, operation switch, and emergency stop switch within the specifications.
  Not doing so may cause a fire or failure.
- Correctly wire the 24 V DC power cable (terminal) of the Handy GOT and [+]/[-] of the DC power supply equipment as shown in this manual.
  Not doing so may cause a failure due to a reverse power connection.

[WIRING PRECAUTIONS]

⚠WARNING

- Ground the FG terminal of the Handy GOT with a ground resistance of 100 Ω or less by using a drain wire that has a cross-sectional area of 2 ㎟ or more.
  Do not use common grounding with higher voltage systems.
  Failure to observe these instructions may cause an electric shock or malfunction.
- When making a connection cable or installing wiring, make sure that no chips or wire offcuts enter the Handy GOT.
  Not doing so may cause a fire, failure or malfunction.

[WIRING PRECAUTIONS]

⚠CAUTION

- When grounding the FG terminal and LG terminal of the GOT power supply section, note the following points.
  Not doing so may cause an electric shock or malfunction.
  [GT27, GT25, GT23, GT2107-W, GT2105-Q]
  Make sure to ground the FG terminal and LG terminal of the GOT power supply section solely for the GOT (ground resistance: 100 Ω or less, ground cable diameter: 1.6 mm or more). (GT2705-V, GT25-W, GT2505-V, GT2107-W, and GT2105-Q do not have the LG terminal.)
  [GT2104-R, GT2104-P, GT2103-P]
  Make sure to ground the FG terminal of the GOT power supply section with a ground resistance of 100 Ω or less. (For GT2104-PMBLS and GT2103-PMBLS, grounding is unnecessary.)
- When tightening the terminal screws, use the following screwdrivers.
  [GT27, GT25, GT23, GT2107-W, GT2105-Q]
  Use a Phillips-head screwdriver No. 2.
  [GT2104-R, GT2104-P, GT2103-P]
  For the usable screwdrivers, refer to the following.
  ☞ Page 326 Power Supply Wiring to the GOT
- Tighten the terminal screws of the GOT power supply section in the following specified torque range.
  [GT27, GT25, GT23]
  Specified torque range (0.5 N•m to 0.8 N•m)
- For a terminal processing of a wire to the GOT power supply section, use the following terminal.
  [GT27, GT25, GT23, GT2107-W, GT2105-Q]
  Use applicable solderless terminals for terminal processing of a wire and tighten them with thespecified torque.
  Not doing so can cause a fire, failure or malfunction.
  [GT2104-R, GT2104-P, GT2103-P]
  Connect a stranded wire or a solid wire directly, or use a rod terminal with an insulation sleeve.
- Correctly wire the GOT power supply section after confirming the rated voltage and terminal arrangement of the product.
  Not doing so can cause a fire or failure.

[WIRING PRECAUTIONS]

⚠CAUTION

- Tighten the terminal screws of the GOT power supply section in the specified torque range.
  Undertightening can cause a short circuit or malfunction.
  Overtightening can cause a short circuit or malfunction due to the damage of the screws or unit.
  The specified torque range is as follows.
  [GT27, GT25, GT23, GT2107-W, GT2105-Q]
  Specified torque range (0.5 N•m to 0.8 N•m)
  [GT2104-R, GT2104-P, GT2103-P]
  Specified torque range (0.22 N•m to 0.25 N•m)
- Exercise care to avoid foreign matter such as chips and wire offcuts entering the GOT.
  Not doing so can cause a fire, failure or malfunction.
- Plug the communication cable into the GOT interface or the connector of the connected unit, andtighten the mounting screws and the terminal screws in the specified torque range.
  Undertightening can cause a short circuit or malfunction.Overtightening can cause a short circuit or malfunction due to the damage of the screws or unit.
- Plug the QnA/ACPU/Motion controller(A series) bus connection cable by inserting it into theconnector of the connected unit until it "clicks".
  After plugging, check that it has been inserted snugly.
  Not doing so can cause a malfunction due to a contact fault.
- When you use the Handy GOT, run the connected cable in ducts or clamp the cable.
  Not doing so can cause the unit or cable to be damaged due to the dangling, motion or accidentalpulling of the cables or can cause a malfunction due to a cable connection fault.
- When you remove a cable from the Handy GOT, do not pull the cable portion.
  Doing so can cause the unit or cable to be damaged or can cause a malfunction due to a cableconnection fault.

[TEST OPERATION PRECAUTIONS]

⚠WARNING

- Before testing the operation of a user-created screen (such as turning on or off a bit device, changing the current value of a word device, changing the set value or current value of a timer or counter, and changing the current value of a buffer memory), thoroughly read the manual to fully understand the operating procedure.
  During the test operation, never change the data of the devices which are used to perform significant operation for the system.
  False output or malfunction can cause an accident.

[STARTUP/MAINTENANCE PRECAUTIONS]

⚠WARNING

- When power is on, do not touch the terminals.
  Doing so can cause an electric shock or malfunction.
- Correctly connect the battery connector.
  Do not charge, disassemble, heat, short-circuit, solder, or throw the battery into the fire.
  Doing so will cause the battery to produce heat, explode, or ignite, resulting in injury and fire.
- Before starting cleaning or terminal screw retightening, always switch off the power externally in all phases.
  Not switching the power off in all phases can cause a unit failure or malfunction.
  Undertightening can cause a short circuit or malfunction.
  Overtightening can cause a short circuit or malfunction due to the damage of the screws or unit.

[STARTUP/MAINTENANCE PRECAUTIONS]

⚠CAUTION

- Do not disassemble or modify the unit.
  Doing so can cause a failure, malfunction, injury or fire.
- Do not touch the conductive and electronic parts of the unit directly.
  Doing so can cause a unit malfunction or failure.
- The cables connected to the unit must be run in ducts or clamped.
  Not doing so can cause the unit or cable to be damaged due to the dangling, motion or accidental pulling of the cables or can cause a malfunction due to a cable connection fault.
- When unplugging the cable connected to the unit, do not hold and pull from the cable portion.
  Doing so can cause the unit or cable to be damaged or can cause a malfunction due to a cable connection fault.
- Do not drop the module or subject it to strong shock. A module damage may result.
- Do not drop or give an impact to the battery mounted to the unit.
  Doing so may damage the battery, causing the battery fluid to leak inside the battery.
  If the battery is dropped or given an impact, dispose of it without using.
- Before touching the unit, always touch grounded metals, etc. to discharge static electricity from human body, etc.
  Not doing so can cause the unit to fail or malfunction.
- Use the battery manufactured by Mitsubishi Electric Corporation.
  Use of other batteries may cause a risk of fire or explosion.
- Dispose of used battery promptly.
  Keep away from children.Do not disassemble and do not dispose of in fire.
- Be sure to shut off all phases of the external power supply before replacing the battery or using the dip switch of the terminating resistor.
  Not doing so can cause the unit to fail or malfunction by static electricity.

[STARTUP/MAINTENANCE PRECAUTIONS]

⚠CAUTION

- Before cleaning the GOT, be sure to turn off the power.
  Before cleaning, check the following items.
  • Ensure that there are no problems with the installation condition of the GOT to the control panel.
  • Ensure that there are no damages on the environmental protection sheet (not replaceable).
  If the environmental protection sheet peels or the cleaning solution enters between the sheet and the display section during cleaning, stop the cleaning immediately.
  In such a case, do not use the GOT.

[TOUCH PANEL PRECAUTIONS]

⚠CAUTION

- For the analog-resistive film type touch panels, normally the adjustment is not required.
  However, the difference between a touched position and the object position may occur as the period of use elapses.
  When any difference between a touched position and the object position occurs, execute the touch panel calibration.
- When any difference between a touched position and the object position occurs, other object may be activated.
  This may cause an unexpected operation due to incorrect output or malfunction.

[PRECAUTIONS FOR USING A DATA STORAGE]

⚠WARNING

- If the SD card is removed from drive A of the GOT while being accessed by the GOT, the GOT may stop processing data for about 20 seconds.
  The GOT cannot be operated during this period.
  The functions that run in the background including a screen updating, alarm, logging, scripts, and others are also interrupted.
  This stop affects the system operation, causing an accident.
  Before removing the SD card, check the following items.
  [GT27, GT25, GT23(Excluding GT2505-V and GT25HS-V)]
  Check that the SD card access LED is off before removing the SD card.
  [GT2505-V, GT25HS-V]
  Make sure to turn off the SD card access switch before removing the SD card.
  Not doing so may damage the SD card or files.
  [GT21]
  Disable the SD card access in the GOT utility, and then check that the SD card access LED is off before removing the SD card.
- Do not remove the data storage from the file server (drive N) that is being accessed by the GOT, or the system operation may be affected.
  Before removing the data storage, check the relevant system signal to make sure that the data storage is not being accessed.

[PRECAUTIONS FOR USING A DATA STORAGE]

⚠CAUTION

- Do not remove the data storage from the GOT while the data storage is being accessed by the GOT, or the data storage and files may be damaged.
  Before removing the data storage, check the SD card access LED, relevant system signal, or others to make sure that the data storage is not being accessed.
- Turning off the GOT while it accesses the SD card results in damage to the SD card and files.
- When using the GOT with an SD card inserted, check the following items.
  [GT27, GT25, GT23(Excluding GT2505-V and GT25HS-V)]
  After inserting an SD card into the GOT, make sure to close the SD card cover.
  Otherwise, data cannot be read or written.
  [GT2505-V, GT25HS-V]
  After inserting an SD card into the GOT, make sure to turn on the SD card access switch.
  Otherwise, data cannot be read or written.
  [GT21]
  After inserting an SD card into the SD card unit, make sure to enable the SD card access in the GOT utility.
  Otherwise, data cannot be read or written.
- When removing the SD card from the GOT, make sure to support the SD card by hand as it may pop out.
  Not doing so may cause the SD card to drop from the GOT, resulting in a failure or break.
- When inserting a USB device into a USB interface of the GOT, make sure to insert the device into the interface firmly.
  Not doing so may cause the USB device to drop from the GOT, resulting in a failure or break. (GT27, GT25, and GT2107-W)
- Before removing the data storage from the GOT, follow the procedure for removal on the utility screen of the GOT.
  After the successful completion dialog is displayed, remove the data storage by hand carefully.
  Not doing so may cause the data storage to drop from the GOT, resulting in a failure or break.

[PRECAUTIONS FOR USE]

⚠CAUTION

- When you operate the Handy GOT while holding it, slide your hand through the hand strap on the back of the GOT to prevent falling.
  The hand strap length is adjustable.
- When you remove a cable from the Handy GOT, do not pull the cable portion.
  Doing so may damage the unit or cable, or cause a malfunction due to a cable connection fault.
- Do not drop or strike the Handy GOT.
  Doing so may damage the GOT.
- When you carry or operate the Handy GOT, hold its body.
  Carrying or operating the Handy GOT while holding its cable may damage the unit or cable.
- Determine whether to use the emergency stop switch of the Handy GOT according to your risk assessment.
- If you use a parallel circuit (to avoid entering the emergency stop status while the Handy GOT is removed), the system may not conform to the safety standards.
  Check the safety standards required for your system before use.
- If the Handy GOT is exposed to any impact beyond the general specifications, chattering may occur in the emergency stop switch for its structural reasons.
  Check that your use conditions are proper.
- Do not touch the edges of the touch panel (display section) repeatedly.
  Doing so may result in a failure.
- Do not turn off the GOT while data is being written to the storage memory (ROM) or SD card.
  Doing so may corrupt the data, rendering the GOT inoperative.
- The GOT rugged model uses the environmental protection sheet (not replaceable) with UV protection function on the front surface.
  Therefore, it is possible to suppress deterioration of the touch panel or the liquid crystal display panel that may be caused by ultraviolet rays.
  Note that if the rugged model is exposed to ultraviolet rays for an extended period of time, the front surface may turn yellow.
  If the rugged model is likely to be exposed to ultraviolet rays for an extended period of time, it is recommended to use a UV protective sheet (option).

[PRECAUTIONS FOR REMOTE CONTROL]

⚠WARNING

- Remote control is available through a network by using GOT functions, including theSoftGOT-GOT link function, the remote personal computer operation function, the VNC server function, and the GOT Mobile function.
  If you remotely operate control equipment using such functions, the field operator may not notice the remote operation, leading to an accident.
  In addition, a communication delay or interruption may occur depending on the network environment, and remote control of control equipment cannot be performed normally in some cases.
  Before using the above functions to perform remote control, fully grasp the circumstances of the field site and ensure safety.
- When operating the server (GOT) of the GOT Mobile function to disconnect a client, notify the operator of the client about the disconnection beforehand.
  Not doing so may cause an accident.

[PRECAUTIONS FOR EXCLUSIVE AUTHORIZATION CONTROL]

⚠WARNING

- Before using the GOT network interaction function to prevent simultaneous operations from multiple pieces of equipment, make sure you understand the function.
  You can enable or disable the exclusive authorization control of the GOT network interaction function for each screen. (For all screens, the exclusive authorization control is disabled by default.)
  Properly determine the screens for which the exclusive authorization control is required, and set the control by screen.
  A screen for which the exclusive authorization control is disabled is operable simultaneously from multiple pieces of equipment. Make sure to determine the operation period for each operator, fully grasp the circumstances of the field site, and ensure safety to perform operations.

[DISPOSAL PRECAUTIONS]

⚠CAUTION

- When disposing of this product, treat it as industrial waste.
  When disposing of batteries, separate them from other wastes according to the local regulations.
  (Refer to Page 369 Low-voltage Battery Detection and Battery Replacement for details of the battery directive in the EU member states.)

[TRANSPORTATION PRECAUTIONS]

⚠CAUTION

- When transporting lithium batteries, make sure to treat them based on the transport regulations.
  (Refer to Page 435 Transportation Precautions for details of the regulated models.)
- Make sure to transport the GOT main unit and/or relevant unit(s) in the manner they will not be exposed to the impact exceeding the impact resistance described in the general specifications of this manual, as they are precision devices.
  Failure to do so may cause the unit to fail.
  Check if the unit operates correctly after transportation.
- When fumigants that contain halogen materials such as fluorine, chlorine, bromine, and iodine are used for disinfecting and protecting wooden packaging from insects, they cause malfunction when entering our products.
  Please take necessary precautions to ensure that remaining materials from fumigant do not enter our products, or treat packaging with methods other than fumigation (heat method).
  Additionally, disinfect and protect wood from insects before packing products.

CONTENTS

SAFETY PRECAUTIONS 1
INTRODUCTION 22
Manuals for GT Works3 22
Abbreviations, Generic Terms, and Model Icons 24

CHAPTER 1 OVERVIEW 31

1.1 GOT 31
1.2 Features 31

CHAPTER 2 System configuration 33

2.1 Overall Configuration 33
Overall configuration of GT27, GT25-W, GT25-S, GT25-V, GT23, and GT21 33
Overall configuration of GT25HS-V 34
2.2 System Equipment 35
GOT 35
CC-Link IE Field Network communication unit set 38
Extension unit 39
Software 42
Option 43
Cable 47
Others 58

CHAPTER 3 SPECIFICATIONS 59

3.1 General Specifications 59
GT27, GT2512-WX, GT2510-WX, GT2507-W, GT25-S, GT25-V 59
GT2507T-W 61
GT25HS-V 62
GT23 63
GT21 64
3.2 Performance Specifications 66
GT27 66
GT2512-WX, GT2510-WX, GT2507-W 76
GT2507T-W 82
GT25-S, GT25-V 84
GT25HS-V 92
GT23 96
GT21 100
3.3 Specifications of Power Supply Section 110
GT27 110
GT2512-WX, GT2510-WX, GT2507-W 111
GT2507T-W 112
GT25-S, GT25-V 112
GT25HS-V 114
GT23 115
GT21 116
3.4 Battery Specifications 118

CHAPTER 4 PART NAMES AND SETTINGS 121
4.1 GT27 . . . 121
GT2715-X . . . 121
GT2712-S . . . 122
GT2710-S, GT2710-V . . . 122
GT2708-S, GT2708-V . . . 123
GT2705-V . . . 123
Part names and settings of GT27 . . . 124
4.2 GT2512-WX, GT2510-WX, GT2507-W . . . 125
GT2512-WX . . . 125
GT2510-WX . . . 125
GT2507-W . . . 126
Part names and settings of GT2512-WX, GT2510-WX, and GT2507-W . . . 127
4.3 GT2507T-W . . . 128
GT2507T-W . . . 128
Part names and settings of GT2507T-W . . . 129
4.4 GT25-S, GT25-V . . . 130
GT2512-S . . . 130
GT2512F-S . . . 130
GT2510-V . . . 131
GT2510F-V . . . 131
GT2508-V . . . 132
GT2508F-V . . . 132
GT2505-V . . . 133
Part names and settings of GT25-S and GT25-V . . . 134
4.5 GT25HS-V . . . 136
GT2506HS-V . . . 136
GT2505HS-V . . . 138
Part names and settings of GT25HS-V . . . 140
4.6 GT23 . . . 142
GT2310-V, GT2308-V . . . 142
Part names and settings of GT23 . . . 143
4.7 GT21 . . . 144
GT2107-WTBD, GT2107-WTSD . . . 144
GT2105-QTBDS, GT2105-QMBDS . . . 144
GT2104-RTBD . . . 145
GT2104-PMBD . . . 145
GT2104-PMBDS . . . 146
GT2104-PMBDS2 . . . 146
GT2104-PMBLS . . . 146
GT2103-PMBD . . . 147
GT2103-PMBDS . . . 147
GT2103-PMBDS2 . . . 147
GT2103-PMBLS . . . 147
Part names and settings of GT21 . . . 148
CHAPTER 5 EMC DIRECTIVE AND LOW VOLTAGE DIRECTIVE 149
5.1 Overview . . . 149
Conforming standards in the EMC Directive . . . 150
Conforming standards in the Low Voltage Directive . . . 150

5.2 EMC Directive Requirements . . . 151
Installing the GOT on the control panel . . . 151
Installing a noise filter (power supply line filter) . . . 152
System configuration . . . 153
Connection of power cables and ground cables . . . 158
Fabricating a connection cable . . . 160
Grounding a cable . . . 168
5.3 Low Voltage Directive Requirements . . . 169
Power supply . . . 169
Control panel . . . 169
Grounding . . . 170
External wiring . . . 170

CHAPTER 6 INSTALLATION AND REMOVAL 171

6.1 Installation Precautions . . . 171
6.2 Panel Cut Dimensions . . . 172
GT27 . . . 172
GT2512-WX, GT2510-WX, GT2507-W . . . 174
GT2507T-W . . . 175
GT25-S, GT25-V . . . 176
GT23 . . . 178
GT21 . . . 178
6.3 Stud . . . 179
Stud specifications . . . 179
Distance between studs . . . 179
6.4 Installation Position . . . 182
GT27 . . . 182
GT2512-WX, GT2510-WX, GT2507-W . . . 184
GT2507T-W . . . 186
GT25-S, GT25-V . . . 188
GT23 . . . 194
GT21 . . . 196
6.5 Control Panel Inside Temperature and GOT Installation Angle . . . 198
GT27 . . . 198
GT2512-WX, GT2510-WX, GT2507-W . . . 199
GT2507T-W . . . 200
GT2512-S, GT2510-V, GT2508-V, GT2505-V . . . 201
GT2512F-S, GT2510F-V, GT2508F-V . . . 202
GT23 . . . 203
GT21 . . . 203
6.6 Installing the GOT . . . 205
GT27, GT25, GT23 . . . 205
GT21 . . . 213
6.7 Removing the GOT . . . 216
GT27, GT25, GT23 . . . 216
GT21 . . . 219
6.8 Handling the Handy GOT . . . 221
Holding the Handy GOT in hand . . . 221
Hanging on a wall . . . 223
Placing on a desk or a floor . . . 224

Installing to/removing from panel . . . 225
6.9 Installing and Removing the Extension Unit . . . 228
Installing multiple extension units (GT27, GT25) . . . 228
Removing the extension unit . . . 230
6.10 Installing the Battery . . . 231
Installing the battery to GT2715, GT2712, GT2710, GT2512, GT2510-V, or GT2510F . . . 232
Installing the battery to GT2708, GT2705, or GT2508 . . . 233
Installing the battery to GT2512-WX, GT2510-WX, GT2507-W, or GT2507T-W . . . 235
Installing the battery to GT2506HS-V . . . 236
Installing the battery to GT2505HS-V . . . 237
Installing the battery to GT2310 or GT2308 . . . 238
Installing the battery to GT2505-V, GT2107-W, GT2105, GT2104-R, GT2104-P . . . 240
6.11 Removing the Battery . . . 242
Removing the battery from GT2715, GT2712, GT2710, GT2512, GT2510-V, or GT2510F . . . 242
Removing the battery from GT2708, GT2705, GT2710 or GT2508 . . . 244
Removing the battery from GT2512-WX, GT2510-WX, GT2507-W, or GT2507T-W . . . 245
Removing the battery from GT2506HS-V . . . 246
Removing the battery from GT2505HS-V . . . 247
Removing the battery from GT2310 or GT2308 . . . 248
Removing the battery from GT2505-V, GT2107-W, GT2105, GT2104-R, GT2104-P . . . 249
6.12 Installing the SD Card . . . 251
GT27, GT25, GT23 . . . 252
GT25HS-V . . . 256
GT21 . . . 257
6.13 Removing the SD Card . . . 258
GT27, GT25, GT23 . . . 259
GT25HS-V . . . 263
GT21 . . . 264
6.14 Installing and Removing the USB Devices . . . 265
Installing the USB devices . . . 265
Removing the USB devices . . . 266
6.15 Installing and Removing the USB cable . . . 267
Installing the USB cable . . . 267
Removing the USB cable . . . 268
6.16 Installing and Removing the Panel-Mounted USB Port Extension . . . 269
Applicable panel-mounted USB port extension . . . 269
Parts name . . . 269
Installing and removing the panel-mounted USB port extension . . . 270

CHAPTER 7 OPTION AND COMMUNICATION CABLE FOR HANDY GOT 273

7.1 Connector Conversion Box . . . 273
Applicable connector conversion box . . . 273
Connector conversion box (GT16H-CNB-42S) . . . 273
Connector conversion box (GT16H-CNB-37S) . . . 293
Connector conversion box (GT11H-CNB-37S) . . . 300
7.2 Emergency Stop Switch Guard Cover . . . 306
Applicable emergency stop switch guard cover . . . 306
Installing procedure . . . 306
7.3 Wall-mounting Attachment . . . 307
Applicable wall-mounting attachment . . . 307

Mounting . . . 307
Attachment of handy GOT . . . 309
7.4 Overview of Communication Cable . . . 310
7.5 External Cable, Relay Cable . . . 314
Pin layout and signal names of the external cable . . . 314
Pin layout of the relay cable . . . 316
Connector specifications . . . 319
Installing and removing of external cable . . . 319

CHAPTER 8 WIRING OF POWER SUPPLY SECTION 323

8.1 Wiring of External Power Supply . . . 325
8.2 Power Supply Wiring to the GOT . . . 326
8.3 Grounding . . . 328
Grounding the GOT . . . 328
Causes of wiring-related malfunction and countermeasure examples . . . 330
8.4 Wiring Inside and Outside the Control Panel . . . 332
Control panel inside wiring . . . 332
Control panel outside wiring . . . 332
8.5 Attaching a Surge Suppressor to Control Equipment . . . 333
8.6 Grounding the Extension Unit . . . 334
Wiring of the FG cable of a bus connection cable . . . 334

CHAPTER 9 HANDY GOT POWER WIRING AND SWITCH HANDLING 335

9.1 Internal Wiring Diagram of Handy GOT . . . 337
GT2506HS-V . . . 337
GT2505HS-V . . . 338
9.2 Power Wiring . . . 339
Power wiring and grounding . . . 339
The cause of malfunctions related wiring/Remedy . . . 340
9.3 Wiring inside and outside the panel . . . 343
Wiring inside . . . 343
Outside the panel . . . 343
Attaching surge killers to control equipment . . . 344
9.4 Switch Wiring . . . 345
Overview for switch . . . 345
Switch wiring example . . . 346
Operation switch wiring . . . 350
Operation switch input . . . 350
LED setting of operation switch (GT2506HS-V) . . . 351
Operation switch name sheet creation (GT2506HS-V) . . . 353
Emergency stop switch wiring . . . 354
Grip switch . . . 357
Grip switch wiring . . . 358
LED settings of grip switch . . . 359
Keylock switch (2-position SW) . . . 360

CHAPTER 10 OPERATING THE GOT 361

10.1 Outline Procedure to Start the GOT . . . 361
10.2 Creating Project Data . . . 364

CHAPTER 11 MAINTENANCE AND INSPECTION 365

11.1 Daily Inspection . . . 366
11.2 Periodic Inspection . . . 367
11.3 Screen Cleaning Method . . . 368
11.4 Low-voltage Battery Detection and Battery Replacement . . . 369

CHAPTER 12 TROUBLESHOOTING 371

12.1 GOT Restoration Sheets . . . 371
GOT status check sheet . . . 372
GOT installation status check sheet . . . 376
System configuration check sheet . . . 382
12.2 Troubleshooting for the Bus Connection . . . 383
Identifying the error position . . . 383
Narrowing the possible error positions . . . 384
Specific example of troubleshooting . . . 385
12.3 Error Messages and System Alarms . . . 386
Displayed contents . . . 386
Error messages and system alarms . . . 388

CHAPTER 13 APPENDICES 389

13.1 External Dimension Diagrams . . . 390
GT27 . . . 390
GT2512-WX, GT2510-WX, GT2507-W . . . 395
GT2507T-W . . . 398
GT25-S, GT25-V . . . 399
GT25HS-V . . . 406
GT23 . . . 408
GT21 . . . 410
13.2 Cable Bend Radius for GT27 with an Extension Unit . . . 417
GT2715-X . . . 417
GT2712-S . . . 418
GT2710-S, GT2710-V . . . 419
GT2708-S, GT2708-V . . . 420
GT2705-V . . . 421
13.3 Cable Bend Radius for GT25 with an Extension Unit . . . 422
GT2512-S, GT2512F-S . . . 422
GT2510-V, GT2510F-V . . . 423
GT2508-V, GT2508F-V . . . 424
13.4 Depth Dimensions for the GOT with an SD Card Unit . . . 425
13.5 Depth Dimensions for the GOT with Extension Units Mounted in Multiple Stages . . . 426
13.6 External Dimension Diagrams of the Communication Cable . . . 428
13.7 External Dimension Diagrams of the External Cable for Handy GOT . . . 431
GT16-C□□□-42P . . . 431
GT16H-C□□□-37PE . . . 431
GT14H-C□□□-42P . . . 431
GT11H-C□□□-37P . . . 432
GT11H-C□□□ . . . 432
GT11H-C15R4-8P . . . 432
GT11H-C15R4-25P . . . 433
GT11H-C15R2-6P . . . 433

13.8 Confirming of Versions and Conforming Standards 434
GT27, GT25 (except GT2505-V and GT25HS-V), GT23 434
GT2505-V, GT25HS-V, GT21 435
13.9 Transportation Precautions 435
Relevant models 435
Transportation guidelines 435
13.10 Calculating Consumed Current of GT2705-V 436
13.11 Open Source Software 437
u-boot 437
REVISIONS 442
WARRANTY 445
Intellectual Property Rights 446

INTRODUCTION

Thank you for choosing Mitsubishi Electric Graphic Operation Terminal (GOT).
Before using the product, read this manual carefully and make sure you understand the functions and performance of the GOT for correct use.
☞ Manuals for GT Works3
☞ Abbreviations, Generic Terms, and Model Icons

Manuals for GT Works3

The electronic manuals related to this product are installed together with the screen design software.
If you need the printed manuals, consult your local sales office.

Manuals for GT Designer3 (GOT2000)

Point

e-Manual refers to the Mitsubishi Electric FA electronic book manuals that can be browsed using a dedicated tool.
e-Manual has the following features:
- Required information can be cross-searched in multiple manuals.
- Other manuals can be accessed from the links in the manual.
- Hardware specifications of each part can be found from the product figures.
- Pages that users often browse can be bookmarked.
- Sample programs can be copied to the engineering tool.

■Screen design software-related manuals

Manual name	Manual number	Format
GT Works3 Installation Instructions	BCN-P5999-0066	PDF
GT Designer3 (GOT2000) Screen Design Manual	SH-081220ENG	PDF e-Manual
GT Converter2 Version3 Operating Manual for GT Works3	SH-080862ENG	PDF e-Manual
GOT2000 Series MES Interface Function Manual for GT Works3 Version1	SH-081228ENG	PDF e-Manual

■Connection manuals

Manual name	Manual number	Format
GOT2000 Series Connection Manual (Mitsubishi Electric Products) For GT Works3 Version1	SH-081197ENG	PDF e-Manual
GOT2000 Series Connection Manual (Non-Mitsubishi Electric Products 1) For GT Works3 Version1	SH-081198ENG	PDF e-Manual
GOT2000 Series Connection Manual (Non-Mitsubishi Electric Products 2) For GT Works3 Version1	SH-081199ENG	PDF e-Manual
GOT2000 Series Connection Manual (Microcomputers, MODBUS/Fieldbus Products, Peripherals) For GT Works3 Version1	SH-081200ENG	PDF e-Manual
GOT2000 Series Handy GOT Connection Manual For GT Works3 Version1	SH-081867ENG	PDF e-Manual
GOT2000 Series Connection Manual (α2 Connection) for GT Works3 Version1	JY997D52301	PDF e-Manual

■GT SoftGOT2000 manuals

Manual name	Manual number	Format
GT SoftGOT2000 Version1 Operating Manual	SH-081201ENG	PDF e-Manual
MELSOFT GT OPC UA Client Operating Manual	SH-082174ENG	PDF

■GOT2000 series user's manuals

Manual name	Manual number	Format
GOT2000 Series User's Manual (Hardware)	SH-081194ENG	PDF e-Manual
GOT2000 Series User's Manual (Utility)	SH-081195ENG	PDF e-Manual
GOT2000 Series User's Manual (Monitor)	SH-081196ENG	PDF e-Manual

■GOT SIMPLE series user's manuals

Manual name	Manual number	Format
GOT SIMPLE Series User's Manual	JY997D52901	PDF e-Manual

■Manuals related to GT Works3 add-on projects

Manual name	Manual number	Format
GT Works3 Add-on License for GOT2000 Enhanced Drive Control (Servo) Project Data Manual (Fundamentals)	SH-082072ENG	PDF e-Manual
GT Works3 Add-on License for GOT2000 Enhanced Drive Control (Servo) Project Data Manual (Screen Details)	SH-082074ENG	PDF e-Manual

Manuals for GT Designer3 (GOT1000)

Refer to the Help and manuals for GT Designer3 (GOT1000).

Abbreviations, Generic Terms, and Model Icons

The following shows the abbreviations, generic terms, and model icons used in this manual.

GOT

■GOT2000 series

Abbreviations and generic terms			Description	Meaning of icon	
				Available	Unavailable
GT27	GT27-X	GT2715-X	GT2715-XTBA GT2715-XTBD	GT 27	GT 27
	GT27-S	GT2712-S	GT2712-STBA GT2712-STWA GT2712-STBD GT2712-STWD		
		GT2710-S	GT2710-STBA GT2710-STBD		
		GT2708-S	GT2708-STBA GT2708-STBD		
	GT27-V	GT2710-V	GT2710-VTBA GT2710-VTWA GT2710-VTBD GT2710-VTWD		
		GT2708-V	GT2708-VTBA GT2708-VTBD		
		GT2705-V	GT2705-VTBD		
GT25			All GT25 models	GT 25	GT 25
	GT25-W	GT2512-WX	GT2512-WXTBD GT2512-WXTSD	GT 25	GT 25
		GT2510-WX	GT2510-WXTBD GT2510-WXTSD		
		GT2507-W	GT2507-WTBD GT2507-WTSD		
		GT2507T-W	GT2507T-WTSD		
	GT25-S	GT2512-S	GT2512-STBA GT2512-STBD		
		GT2512F-S	GT2512F-STNA GT2512F-STND		
	GT25-V	GT2510-V	GT2510-VTBA GT2510-VTWA GT2510-VTBD GT2510-VTWD		
		GT2510F-V	GT2510F-VTNA GT2510F-VTND		
		GT2508-V	GT2508-VTBA GT2508-VTWA GT2508-VTBD GT2508-VTWD		
		GT2508F-V	GT2508F-VTNA GT2508F-VTND		
		GT2505-V	GT2505-VTBD		
	GT25HS-V Handy GOT	GT2506HS-V	GT2506HS-VTBD	GT 2506 HS	GT 2506 HS
		GT2505HS-V	GT2505HS-VTBD	GT 2505 HS	GT 2505 HS
GT23	GT23-V	GT2310-V	GT2310-VTBA GT2310-VTBD	GT 23	GT 23
		GT2308-V	GT2308-VTBA GT2308-VTBD		

Abbreviations and generic terms			Description	Meaning of icon	
				Available	Unavailable
GT21			All GT21 models		
	GT21-W	GT2107-W	GT2107-WTBD GT2107-WTSD		
	GT21-Q	GT2105-Q	GT2105-QTBDS GT2105-QMBDS		
	GT21-R	GT2104-R	GT2104-RTBD		
	GT21-P	GT2104-P	GT2104-PMBD		
			GT2104-PMBDS		
			GT2104-PMBDS2		
			GT2104-PMBLS		
		GT2103-P	GT2103-PMBD		
			GT2103-PMBDS		
			GT2103-PMBDS2		
			GT2103-PMBLS		
GT SoftGOT2000			GT SoftGOT2000 Version1		

■GOT SIMPLE series

Abbreviations and generic terms		Description	Meaning of icon	
			Available	Unavailable
GS25		GS2512-WXTBD		
GS21	GS21-W-N	GS2110-WTBD-N GS2107-WTBD-N		
	GS21-W	GS2110-WTBD GS2107-WTBD		

■GOT1000 series, GOT900 series, and GOT800 series

Abbreviations and generic terms	Description	Meaning of icon
		Available / Unavailable
GOT1000 Series	GOT1000 Series	-
GOT900 Series	GOT-A900 Series GOT-F900 Series	-
GOT800 Series	GOT-800 Series	-

Communication unit

Abbreviations and generic terms	Description
Bus connection unit	GT15-QBUS GT15-QBUS2 GT15-ABUS GT15-ABUS2 GT15-75QBUSL GT15-75QBUS2L GT15-75ABUSL GT15-75ABUS2L
Serial communication unit	GT15-RS2-9P GT15-RS4-9S GT15-RS4-TE
MELSECNET/H communication unit	GT15-J71LP23-25 GT15-J71BR13
CC-Link IE TSN communication unit	GT25-J71GN13-T2
CC-Link IE Controller Network communication unit	GT15-J71GP23-SX
CC-Link IE Field Network communication unit	GT15-J71GF13-T2
CC-Link communication unit	GT15-J61BT13
Wireless LAN communication unit	GT25-WLAN
Serial multi-drop connection unit	GT01-RS4-M
Connection conversion adapter	GT10-9PT5S
Field network adapter unit	GT25-FNADP
Ethernet communication unit	GT25-J71E71-100
RS-232/485 signal conversion adapter	GT14-RS2T4-9P

Option unit

Abbreviations and generic terms	Description
Printer unit	GT15-PRN
Video input unit	GT27-V4-Z (A set of GT16M-V4-Z and GT27-IF1000)
RGB input unit	GT27-R2 GT27-R2-Z (A set of GT16M-R2-Z and GT27-IF1000)
Video/RGB input unit	GT27-V4R1-Z (A set of GT16M-V4R1-Z and GT27-IF1000)
RGB output unit	GT27-ROUT GT27-ROUT-Z (A set of GT16M-ROUT-Z and GT27-IF1000)
Digital video output unit	GT27-VHOUT
Multimedia unit	GT27-MMR-Z (A set of GT16M-MMR-Z and GT27-IF1000)
Video signal conversion unit	GT27-IF1000
External I/O unit	GT15-DIO GT15-DIOR
Sound output unit	GT15-SOUT
SD card unit	GT21-03SDCD

Option

Abbreviations and generic terms	Description
SD card	NZ1MEM-2GBSD NZ1MEM-4GBSD NZ1MEM-8GBSD NZ1MEM-16GBSD L1MEM-2GBSD L1MEM-4GBSD
Battery	GT11-50BAT GT15-BAT
Protective sheet	GT27-15PSGC GT25-12WPSGC GT25-12PSGC GT25-10WPSGC GT25-10PSGC GT25-08PSGC GT21-07WPSGC GT25T-07WPSVC GT25-05PSGC GT25-05PSGC-2 GT21-05PSGC GT21-04RPSGC-UC GT21-03PSGC-UC GT21-04PSGC-UC GT27-15PSCC GT25-12WPSCC GT25-12PSCC GT25-10WPSCC GT25-10PSCC GT25-08PSCC GT25-05PSCC GT25-05PSCC-2 GT25-12PSCC-UC GT25-10PSCC-UC GT25-08PSCC-UC GT21-07WPSCC GT21-05PSCC GT21-04RPSCC-UC GT21-04PSCC-UC GT21-03PSCC-UC GT16H-60PSC GT14H-50PSC
Antibacterial/antiviral protective sheet	GT25-12PSAC GT25-10PSAC GT25-08PSAC
Environmental protection sheet	GT25F-12ESGS GT25F-10ESGS GT25F-08ESGS
Protective cover for oil	GT20-15PCO GT20-12PCO GT20-10PCO GT20-08PCO GT21-12WPCO GT21-10WPCO GT21-07WPCO GT25T-07WPCO GT25-05PCO GT25-05PCO-2 GT05-50PCO GT21-04RPCO GT10-30PCO GT10-20PCO
USB environmental protection cover	GT25-UCOV GT25-05UCOV GT21-WUCOV

Abbreviations and generic terms	Description
Stand	GT15-90STAND GT15-80STAND GT15-70STAND GT05-50STAND GT25-10WSTAND GT21-07WSTAND GT25T-07WSTAND
Attachment	GT15-70ATT-98 GT15-70ATT-87 GT15-60ATT-97 GT15-60ATT-96 GT15-60ATT-87 GT15-60ATT-77 GT21-04RATT-40
Panel-mounted USB port extension	GT14-C10EXUSB-4S GT10-C10EXUSB-5S
Connector conversion box	GT16H-CNB-42S GT16H-CNB-37S GT11H-CNB-37S
Emergency stop switch guard cover	GT16H-60ESCOV GT14H-50ESCOV
Wall-mounting attachment	GT14H-50ATT

Software

■Software related to GOT

Abbreviations and generic terms	Description
GT Works3	SW1DND-GTWK3-J, SW1DND-GTWK3-E, SW1DND-GTWK3-C
GT Designer3 Version1	Screen design software GT Designer3 for GOT2000 and GOT1000 series
GT Designer3	Screen design software for GOT2000 series included in GT Works3
GT Designer3 (GOT2000)	
GT Designer3 (GOT1000)	Screen design software for GOT1000 series included in GT Works3
Speech synthesis license	GT Works Text to Speech License (SW1DND-GTVO-M)
Add-on license	GT Works3 add-on license for GOT2000 enhanced drive control (servo) project data (SW1DND-GTSV-MZ)
GENESIS64 Advanced	GENESIS64 server application (GEN64-APP)
GENESIS64 Basic SCADA	GENESIS64 server application (GEN64-BASIC)
GENESIS64	Generic term of GENESIS64 Advanced and GENESIS64 Basic SCADA
GOT Mobile function license for GT SoftGOT2000	License required to use the GOT Mobile function with GT SoftGOT2000 (SGT2K-WEBSKEY-□)
GT Simulator3	Screen simulator GT Simulator3 for GOT2000, GOT1000, and GOT900 series
GT SoftGOT2000	GOT2000 compatible HMI software GT SoftGOT2000
GT OPC UA Client	MELSOFT GT OPC UA Client (SW1DNN-GTOUC-MD)
GT Converter2	Data conversion software GT Converter2 for GOT1000 and GOT900 series
GT Designer2 Classic	Screen design software GT Designer2 Classic for GOT900 series
GT Designer2	Screen design software GT Designer2 for GOT1000 and GOT900 series
DU/WIN	Screen design software FX-PCS-DU/WIN for GOT-F900 series

■Software related to iQ Works

Abbreviations and generic terms	Description
iQ Works	iQ Platform compatible engineering environment MELSOFT iQ Works
MELSOFT Navigator	Integrated development environment software included in SW□DND-IQWK (iQ Platform compatible engineering environment MELSOFT iQ Works) (□ represents a version.)
MELSOFT iQ AppPortal	SW□DND-IQAPL-M type integrated application management software (□ represents a version.)

■Other software

Abbreviations and generic terms		Description
GX Works3		SW□DND-GXW3-E (-EA, -EAZ) type programmable controller engineering software (□ represents a version.)
GX Works2		SW□DNC-GXW2-E (-EA, -EAZ) type programmable controller engineering software (□ represents a version.)
Controller simulator	GX Simulator3	Simulation function of GX Works3
	GX Simulator2	Simulation function of GX Works2
	GX Simulator	SW□D5C-LLT-E (-EV) type ladder logic test tool function software package (SW5D5C-LLT (-V) or later versions) (□ represents a version.)
GX Developer		SW□D5C-GPPW-E (-EV)/SW□D5F-GPPW (-V) type software package (□ represents a version.)
GX LogViewer		SW□DNN-VIEWER-E type software package (□ represents a version.)
MI Configurator		Configuration and monitor tool for Mitsubishi Electric industrial computers (SW□DNNMICONF-M) (□ represents a version.)
PX Developer		SW□D5C-FBDQ-E type FBD software package for process control (□ represents a version.)
MT Works2		Motion controller engineering environment MELSOFT MT Works2 (SW□DND-MTW2-E) (□ represents a version.)
MT Developer		SW□RNC-GSV type integrated start-up support software for motion controller Q series (□ represents a version.)
CW Configurator		Setting/monitoring tools for the C Controller module and MELSECWinCPU (SW□DND-RCCPU-E) (□ represents a version.)
MR Configurator2		SW□DNC-MRC2-E type servo configuration software (□ represents a version.)
MR Configurator		MRZJW□-SETUP type servo configuration software (□ represents a version.)
FR Configurator2		Inverter setup software (SW□DND-FRC2-E) (□ represents a version.)
FR Configurator		Inverter setup software (FR-SW□-SETUP-WE) (□ represents a version.)
NC Configurator2		CNC parameter setting support tool (FCSB1221)
NC Configurator		CNC parameter setting support tool
FX Configurator-FP		Parameter setting, monitoring, and testing software package for FX3U-20SSC-H (SW□D5CFXSSCE) (□ represents a version.)
FX Configurator-EN-L		FX3U-ENET-L type Ethernet module setting software (SW1D5-FXENETL-E)
FX Configurator-EN		FX3U-ENET type Ethernet module setting software (SW1D5C-FXENET-E)
RT ToolBox2		Robot program creation software (3D-11C-WINE)
RT ToolBox3		Robot program creation software (3F-14C-WINE)
MX Component		MX Component Version□ (SW□D5C-ACT-E, SW□D5C-ACT-EA) (□ represents a version.)
MX Sheet		MX Sheet Version□ (SW□D5C-SHEET-E, SW□D5C-SHEET-EA) (□ represents a version.)
CPU Module Logging Configuration Tool		CPU module logging configuration tool (SW1DNN-LLUTL-E)

License key (for GT SoftGOT2000)

Abbreviations and generic terms	Description
License key	GT27-SGTKEY-U

Others

Abbreviations and generic terms	Description
IAI	IAI Corporation
AZBIL	Azbil Corporation
OMRON	OMRON Corporation
KEYENCE	KEYENCE CORPORATION
JTEKT ELECTRONICS (formerly KOYO EI)	JTEKT ELECTRONICS CORPORATION (formerly KOYO ELECTRONICS INDUSTRIES CO., LTD.)
JTEKT	JTEKT CORPORATION
SHARP	Sharp Corporation
SHINKO	Shinko Technos Co., Ltd.
CHINO	CHINO CORPORATION
TOSHIBA	TOSHIBA CORPORATION
SHIBAURA MACHINE	SHIBAURA MACHINE CO.,LTD.
PANASONIC	Panasonic Corporation
PANASONIC IDS	Panasonic Industrial Devices SUNX Co., Ltd.
HITACHI IES	Hitachi Industrial Equipment Systems Co., Ltd.
HITACHI	Hitachi, Ltd.
HIRATA	Hirata Corporation
FUJI	FUJI ELECTRIC CO., LTD.
MURATEC	Muratec products manufactured by Murata Machinery, Ltd.
YASKAWA	YASKAWA Electric Corporation
YOKOGAWA	Yokogawa Electric Corporation
RKC	RKC INSTRUMENT INC.
ALLEN-BRADLEY	Allen-Bradley products manufactured by Rockwell Automation, Inc.
CLPA	CC-Link Partner Association
GE	GE Intelligent Platforms, Inc.
HMS	HMS Industrial Networks
LS ELECTRIC (formerly LS IS)	LS ELECTRIC Co., Ltd (formerly LS Industrial Systems Co., Ltd.)
MITSUBISHI INDIA	Mitsubishi Electric India Pvt. Ltd.
ODVA	Open DeviceNet Vendor Association, Inc.
SCHNEIDER	Schneider Electric SA
SICK	SICK AG
SIEMENS	Siemens AG
SCHNEIDER EJH	Schneider Electric Japan Holdings Ltd.
PLC	Programmable controller manufactured by its respective company
Control equipment	Control equipment manufactured by its respective company
Temperature controller	Temperature controller manufactured by its respective company
Indicating controller	Indicating controller manufactured by its respective company
Controller	Controller manufactured by its respective company
Industrial switch (for CC-Link IE TSN Class B)	CC-Link IE TSN Class B (Synchronized Realtime Communication) hub certified by CC-Link Partner Association
Industrial switch (for CC-Link IE TSN Class A)	CC-Link IE TSN Class A (Realtime Communication) hub certified by CC-Link Partner Association
CC-Link IE TSN-equipped module	Generic term for the following CC-Link IE TSN master/local modules and CC-Link IE TSN Plus master/local module • RJ71GN11-T2 • RJ71GN11-EIP • FX5-CCLGN-MS

1 OVERVIEW

- Page 31 GOT
- Page 31 Features

1.1 GOT

The GOT is designed to connect to a PLC or other equipment, and to display operation switches, lamps, data, and messages.
To use the GOT, mount it on a control panel or an operation panel.

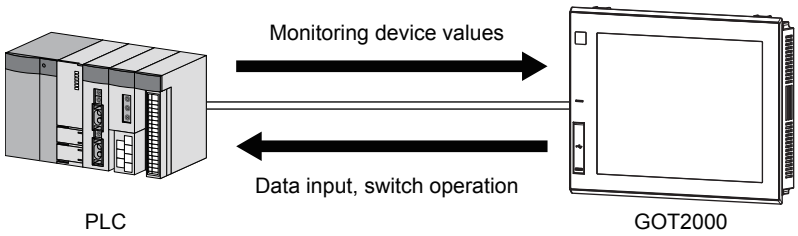

1.2 Features

Enhanced standard equipment

■Variety of connections with various FA devices

The GOT2000 series has different types of interfaces to connect to various FA devices.
GT27, GT25: Ethernet, RS-232, RS-422/485, and extension interfaces *1
GT23, GT21: Ethernet, RS-232, and RS-422/485*1

*1 The available interfaces vary by model.

For the available interfaces for each model, refer to the following.
☞ Page 66 Performance Specifications

■SD card interface compatible with a large-capacity SDHC card allowing high-speed communication

You can use a large-capacity SDHC card allowing high-speed communication as a data storage.
GT27, GT25, GT23, GT2107, GT2105, GT2104-R, GT2104-P: Equipped with the SD card interface as standard*1
GT2103-P: equipped with the SD card unit as an option *1

*1 GT2104-PMBLS and GT2103-PMBLS cannot use SD cards.

■Connection with various peripheral devices with the USB host (GT27, GT25, GT23, GT2107-W)

You can connect the GOT to various peripherals via the USB (Host) interface.
Using a USB memory, USB mouse, USB keyboard, or others enhances your convenience.

■Sound output interface as standard equipment (GT25-W only)

The speaker with a built-in amplifier is connectable to the GOT without using an extension unit.

■Two Ethernet interfaces as standard equipment (GT25-W only)

The GOT is connectable to multiple networks without using an extension unit.

Improved usability

■Enhanced troubleshooting functions

The enhanced diagnosis functions and the guidance display reduce the time required for startup or troubleshooting.
GOT2000 Series User's Manual (Utility)
GOT2000 Series User's Manual (Monitor)

■Easy and simple screen creation

You can create screens easily and simply with the screen design software, GT Designer3 Version1.
GT Designer3 (GOT2000) Screen Design Manual

■Personal computer-like operation screen

The personal computer-like operation screen enables intuitive operations.

■Multi-touch function, gesture function (GT27 only)

Characters can be scaled by pinch-in/out with fingers. Also, screens can be scrolled with a flick operation.

■Support for the vertical installation

Since the vertical installation is supported, the GOT can be installed in even a vertically oriented space.

Enhanced compatibility with Mitsubishi FA devices

The sequence program monitor function enables enhanced compatibility with Mitsubishi FA devices.

By using the backup/restoration function, you can save the programs and data of Mitsubishi FA devices (such as PLCs) to an SD card.

GOT2000 Series User's Manual (Utility)

GOT2000 Series User's Manual (Monitor)

Easy replacement

The existing project data is compatible with the GOT2000 series. You can replace an existing model with the GOT2000 series model easily.

The panel cutting dimensions for the GOT2000 series are the same as those for the GOT1000 series. You do not have to rework the control panel for installation. *1

*1 To replace GT104□ with GT2104-R, the attachment (GT21-04RATT-40) is required.

Adoption of LED backlight

The GOT adopts a long-life LED backlight, and you do not have to replace the backlight.

Compatibility with external devices handling data such as multimedia and video (GT27 (except GT2705) only)

You can input or output video signals using the GOT in combination with an extension unit for multimedia.

Abundant functions

The GOT supports abundant functions such as the recipe, alarm, operation log, and operator authentication.

GT Designer3 (GOT2000) Screen Design Manual

Adding a rugged model (GT2507T-W)

The rugged model has been added, featuring an expanded operating temperature range, improved visibility, andincreased UV cutoff.

Fitted flush with the control panel (GT2512F-S, GT2510F-V, and GT2508F-V)

By installing the GOT from the rear of the control panel, the GOT will fit flush with the surface of the control panel.

GOT equipped with the hardware switch and touch panel (GT25HS-V only)

The GOT has both the hardware switch (operation switch) and touch panel for inputting commands to controllers.

2 System configuration

- Page 33 Overall Configuration
- Page 35 System Equipment

2.1 Overall Configuration

The following shows the overall configuration of the GOT2000 series.

Overall configuration of GT27, GT25-W, GT25-S, GT25-V, GT23, and GT21

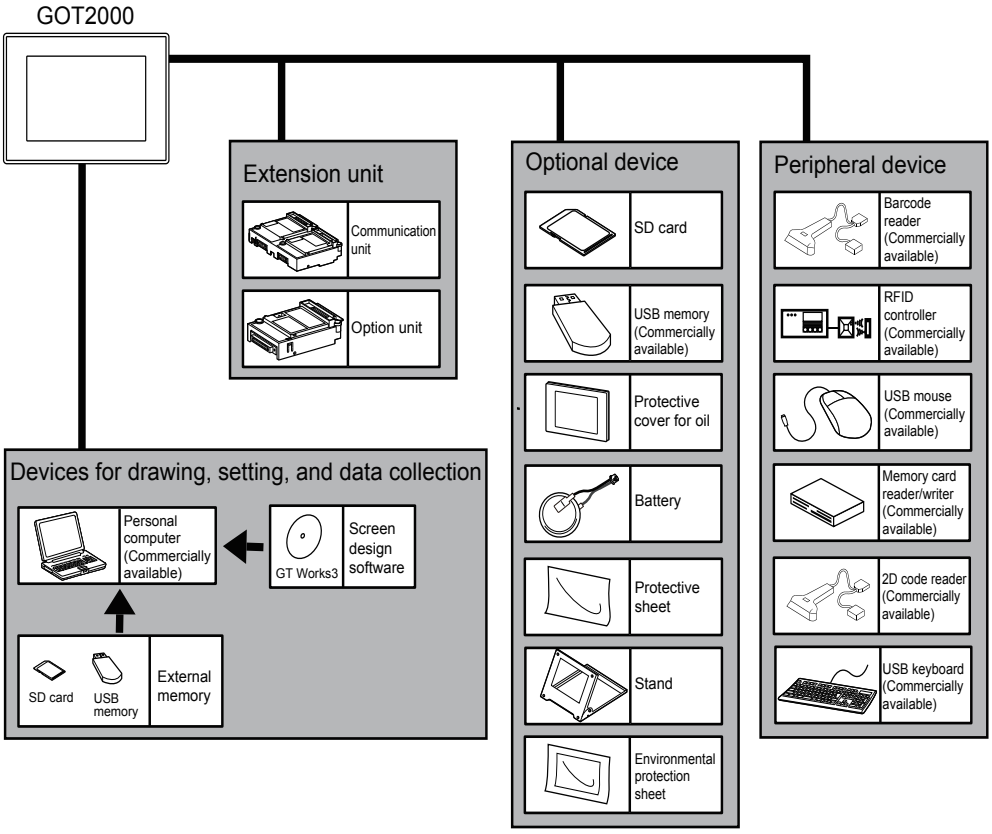

Overall configuration of GT25HS-V

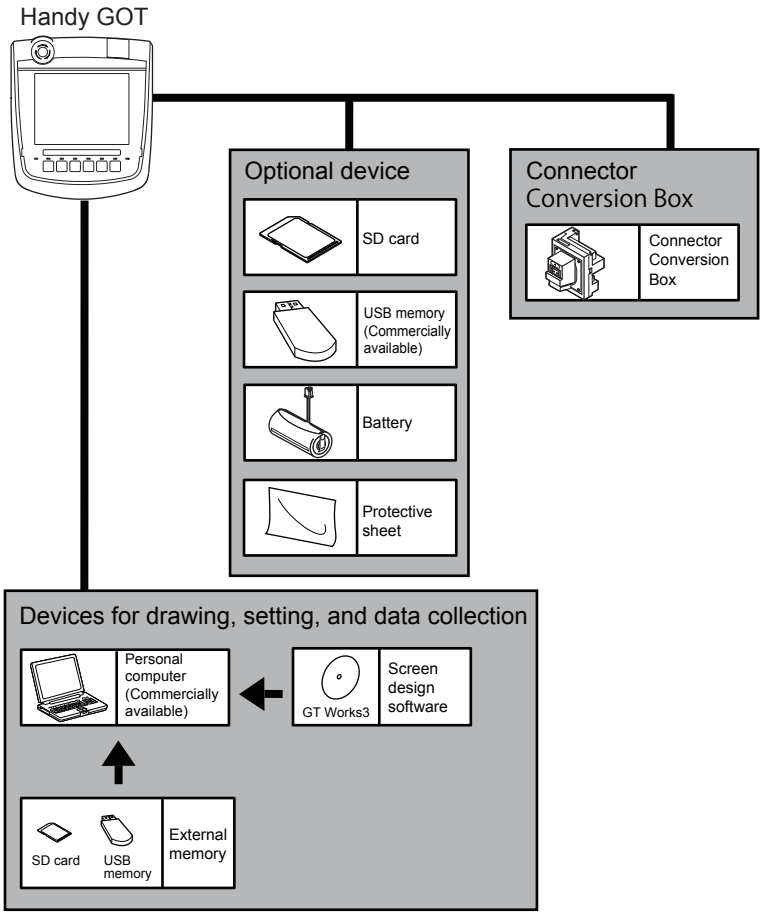

2.2 System Equipment

The following shows the system equipment of the GOT2000 series.

☞ Page 35 GOT
☞ Page 38 CC-Link IE Field Network communication unit set
☞ Page 39 Extension unit
☞ Page 42 Software
☞ Page 43 Option
☞ Page 47 Cable
☞ Page 58 Others

GOT

The following shows the meaning of the GOT model name.

GT27 15 □ - X T B A □

Symbol	Model
GT27	GT27
GT25	GT25
GT23	GT23
GT21	GT21

Symbol	Resolution
WX	WXGA
X	XGA
S	SVGA
V	VGA
W	WVGA
Q	QVGA
R	480 × 272 dots
P	320 × 128 dots or less

Symbol	Display section
T	TFT color
M	TFT monochrome

Symbol	Panel color
B	Black
W	White
S	Silver
N	No frame

Symbol	Power type
A	100 V AC to 240 V AC
D	24 V DC
L	5 V DC

Symbol	Others
None*1	With an Ethernet interface and an RS-422/485 interface
S*1	With an RS-232 interface and an RS-422/485 interface, or with an RS-422 interface only
S2*1	With two RS-232 interfaces
-GF*2	CC-Link IE Field Network communication unit set

Symbol	Screen size
15	15"
12	12.1" or 12.1" wide screen
10	10.4" or 10.1" wide screen
08	8.4"
07	7" wide screen
06	6.5"
05	5.7"
04	4.5" or 4.3"
03	3.8"

Symbol	Structure
None	Standard
HS	Handy
F	Open frame
T	Rugged

*1 For GT21 only
For the details of each model, refer to the remarks of the table in "2.2.1 GOT".
☞ Page 35 GOT
*2 For GT27 and GT25 only

Classification		Model	Screen size	Display section Display color	Front panel color	Power supply	Remarks
GT27	GT2715	GT2715-XTBA	15" XGA	TFT color 65536 colors	Black	AC	Multimedia Video/RGB compatible Multi-touch compatible
		GT2715-XTBD				DC	
	GT2712	GT2712-STBA	12.1" SVGA		Black	AC	
		GT2712-STBD				DC	
		GT2712-STWA			White	AC	
		GT2712-STWD *1*2				DC	
	GT2710	GT2710-STBA	10.4" SVGA		Black	AC	
		GT2710-STBD				DC	
		GT2710-VTBA	10.4" VGA			AC	
		GT2710-VTBD				DC	
		GT2710-VTWA			White	AC	
		GT2710-VTWD *1*2				DC	
	GT2708	GT2708-STBA	8.4" SVGA		Black	AC	
		GT2708-STBD				DC	
		GT2708-VTBA	8.4" VGA			AC	
		GT2708-VTBD				DC	
	GT2705	GT2705-VTBD	5.7" VGA		Black	DC	Multi-touch compatible
GT25	GT2512	GT2512-STBA	12.1" SVGA	TFT color 65536 colors	Black	AC	—
		GT2512-STBD				DC	
		GT2512F-STNA			—	AC	Open frame model
		GT2512F-STND				DC	
	GT2510	GT2510-VTBA	10.4" VGA		Black	AC	—
		GT2510-VTBD				DC	
		GT2510-VTWA			White	AC	
		GT2510-VTWD *1*2				DC	
		GT2510F-VTNA			—	AC	Open frame model
		GT2510F-VTND				DC	
	GT2508	GT2508-VTBA	8.4" VGA		Black	AC	—
		GT2508-VTBD				DC	
		GT2508-VTWA			White	AC	
		GT2508-VTWD *1*2				DC	
		GT2508F-VTNA			—	AC	Open frame model
		GT2508F-VTND				DC	
	GT2505	GT2505-VTBD	5.7" VGA		Black	DC	—
GT25 (Wide screen)	GT2512	GT2512-WXTBD	12.1" WXGA	TFT color 65536 colors	Black	DC	Wide model
		GT2512-WXTSD			Silver *3		
	GT2510	GT2510-WXTBD	10.1" WXGA		Black		
		GT2510-WXTSD			Silver *3		
	GT2507	GT2507-WTBD	7" WVGA		Black		
		GT2507-WTSD			Silver *3		
GT25 (Rugged)	GT2507	GT2507T-WTSD	7" WVGA	TFT color 65536 colors	Silver	DC	Rugged model
GT25 (Handy)	GT2506	GT2506HS-VTBD	6.5" VGA	TFT color 65536 colors	Black	DC	Handy GOT
	GT2505	GT2505HS-VTBD	5.7" VGA				
GT23	GT2310	GT2310-VTBA	10.4" VGA	TFT color 65536 colors	Black	AC	—
		GT2310-VTBD				DC	
	GT2308	GT2308-VTBA	8.4" VGA			AC	
		GT2308-VTBD				DC	

Classification		Model	Screen size	Display section Display color	Front panel color	Power supply	Remarks
GT21	GT2105	GT2105-QTBDS	5.7" QVGA [320 × 240 dots]	TFT color 65536 colors	Black	DC	RS-232 RS-422/485
		GT2105-QMBDS		TFT monochrome (black/white) 32 levels		DC	
	GT2104	GT2104-RTBD	4.3" [480 × 272 dots]	TFT color 65536 colors	Black	DC	Ethernet RS-232 RS-422/485
		GT2104-PMBD	4.5" [384 × 128 dots]	TFT monochrome (black/white) 32 levels 5-color LED (white, green, pink, orange, and red)	Black	DC	Ethernet RS-422/485
		GT2104-PMBDS				DC	RS-232 RS-422/485
		GT2104-PMBDS2				DC	RS-232 × 2 channels
		GT2104-PMBLS				5 V DC	RS-422 (for connection to FXCPU only)
	GT2103	GT2103-PMBD	3.8" [320 × 128 dots]	TFT monochrome (black/white) 32 levels 5-color LED (white, green, pink, orange, and red)	Black	DC	Ethernet RS-422/485
		GT2103-PMBDS				DC	RS-232 RS-422/485
		GT2103-PMBDS2				DC	RS-232 × 2 channels
		GT2103-PMBLS				5 V DC	RS-422 (for connection to FXCPU only)
GT21 (Wide screen)	GT2107	GT2107-WTBD	7" WVGA [800 × 480 dots]	TFT color 65536 colors	Black	DC	Ethernet RS-232 RS-422/485
		GT2107-WTSD			Silver *3		

*1 To make the GOT comply with the ATEX Directive or KCs regulation, an optional protective sheet (GT25-□□PSCC-UC) and special fittings (GT25-□□FIT-EXS) are required. (GT2508-VTWD requires the protective sheet only.)
For the details of the protective sheet and special fittings, refer to the following.
☞ Page 43 Option for GT27, GT25-W, GT25-S, GT25-V, GT23, and GT21

*2 The GOT is not compliant with the ATEX Directive or KCs regulation when any communication unit or option unit is mounted on the GOT.
For compliance with the ATEX Directive and KCs regulation, refer to the following Technical Bulletin.
GOT2000 Series in Compliance with the ATEX Directive and KCs Certification Requirements (GOT-A-0101)

*3 The lower part of the panel including the USB environmental protection cover is black.

For information on the status of compliance with Japanese and international standards and laws (CE, ATEX, UL/cUL, Class I, Division 2, EAC, KC, KCs, and maritime certifications (ABS/BV/DNV/LR/NK/RINA)), refer to the Mitsubishi Electric FA Global Website.

www.MitsubishiElectric.com/fa

CC-Link IE Field Network communication unit set

Classification		Model	Screen size	Display section Display color	Front panel color	Power supply	Remarks
GT27	GT2715	GT2715-XTBA-GF	15" XGA	TFT color 65536 colors	Black	AC	GOT + GT15-J71GF13-T2
		GT2715-XTBD-GF				DC	
	GT2712	GT2712-STBA-GF	12.1" SVGA		Black	AC	
		GT2712-STBD-GF				DC	
		GT2712-STWA-GF			White	AC	
		GT2712-STWD-GF				DC	
	GT2710	GT2710-STBA-GF	10.4" SVGA		Black	AC	
		GT2710-STBD-GF				DC	
		GT2710-VTBA-GF	10.4" VGA			AC	
		GT2710-VTBD-GF				DC	
		GT2710-VTWA-GF			White	AC	
		GT2710-VTWD-GF				DC	
	GT2708	GT2708-STBA-GF	8.4" SVGA		Black	AC	
		GT2708-STBD-GF				DC	
		GT2708-VTBA-GF	8.4" VGA			AC	
		GT2708-VTBD-GF				DC	
	GT2705	GT2705-VTBD-GF	5.7" VGA		Black	DC	
GT25	GT2512	GT2512-STBA-GF	12.1" SVGA	TFT color 65536 colors	Black	AC	GOT + GT15-J71GF13-T2
		GT2512-STBD-GF				DC	
	GT2510	GT2510-VTBA-GF	10.4" VGA		Black	AC	
		GT2510-VTBD-GF				DC	
		GT2510-VTWA-GF			White	AC	
		GT2510-VTWD-GF				DC	
	GT2508	GT2508-VTBA-GF	8.4" VGA		Black	AC	
		GT2508-VTBD-GF				DC	
		GT2508-VTWA-GF			White	AC	
		GT2508-VTWD-GF				DC	

Extension unit

Communication unit

Product name	Model	Specifications	Supported model			
			GT27	GT25	GT23	GT21
Ethernet communication unit [*1]	GT25-J71E71-100	Data transfer method: 100BASE-TX, 10BASE-T AUTO MDI/MDI-X	○	○ [*9]	—	—
Serial communication unit	GT15-RS2-9P	RS-232 serial communication unit (D-sub 9-pin male)	○	○ [*9]	—	—
	GT15-RS4-9S	RS-422/485 serial communication unit (D-sub 9-pin female) [*1*2]	○	○ [*9]	—	—
	GT15-RS4-TE	RS-422/485 serial communication unit (terminal block) [*1] Can be used only when connected with temperature controllers/indicating controllers by RS-485 connection or at the GOT multi-drop connection	○	○ [*9]	—	—
Bus connection unit	GT15-QBUS	Q-bus connection unit (1 channel), standard model	○	○ [*9]	—	—
	GT15-QBUS2	Q-bus connection unit (2 channels), standard model	○	○ [*9]	—	—
	GT15-ABUS	A-bus connection unit (1 channel), standard model	○	○ [*9]	—	—
	GT15-ABUS2	A-bus connection unit (2 channels), standard model	○	○ [*9]	—	—
	GT15-75QBUSL	Q-bus connection unit (1 channel), slim model [*3]	○	○ [*9]	—	—
	GT15-75QBUS2L	Q-bus connection unit (2 channels), slim model [*3]	○	○ [*9]	—	—
	GT15-75ABUSL	A-bus connection unit (1 channel), slim model [*3]	○	○ [*9]	—	—
	GT15-75ABUS2L	A-bus connection unit (2 channels), slim model [*3]	○	○ [*9]	—	—
MELSECNET/H communication unit	GT15-J71LP23-25	Unit for the normal station (Optical loop)	○	○ [*9]	—	—
	GT15-J71BR13	Unit for the normal station (Coaxial bus)	○	○ [*9]	—	—
CC-Link IE TSN communication unit	GT25-J71GN13-T2	Unit for the local station (device station)	○	○ [*9]	—	—
CC-Link IE Controller Network communication unit	GT15-J71GP23-SX	Unit for the normal station (Optical loop)	○	○ [*9]	—	—
CC-Link IE Field Network communication unit	GT15-J71GF13-T2	Unit for the intelligent device station	○	○ [*9]	—	—
CC-Link communication unit	GT15-J61BT13	Unit for the intelligent device station, CC-Link Ver.2 compatible	○	○ [*9]	—	—
Field network adapter unit	GT25-FNADP	Adapter unit for field network communication [*4]	○	○ [*9]	—	—
Wireless LAN communication unit [*5*6]	GT25-WLAN	IEEE802.11b/g/n compliant, built-in antenna, wireless LAN access point (base station), station (client), connection to personal computer, tablet, smartphone For the hardware version and applicable wireless standards of the wireless LAN communication unit, refer to the following. ☞ Page 40 Hardware version and applicable wireless standards of the wireless LAN unit	○	○ [*11]	—	—
Serial multi-drop connection unit	GT01-RS4-M	For the GOT multi-drop connection	○	○ [*12]	—	○ [*8]
Connection conversion adapter	GT10-9PT5S	For connecting the RS-422/485 (D-sub 9-pin connector) and RS-422/485 (terminal block)	—	○ [*10]	—	○ [*7]
RS-232/485 signal conversion adapter	GT14-RS2T4-9P	For connecting the RS-232 (D-sub 9-pin connector) and RS-485 (terminal block)	—	○ [*10]	—	—

*1 May not be able to be used depending on the connection target. For details, refer to GOT2000 Series Connection Manual.
*2 Cannot be used when connected with temperature controllers or indicating controllers by RS-485 (2-wire type) connection.
*3 Cannot be stacked with other units.
*4 The field network adapter unit can be used with the following field networks by using the Anybus CompactCom M40 network communication module manufactured by HMS.
Purchase a communication module by specifying its article number.

Supported network	Communication module product name	Communication module article number
PROFIBUS DP	ABCC-M40-DPV1	AB6910-B, AB6910-C
DeviceNet	ABCC-M40-DEV	AB6909-B, AB6909-C

*5 Data transfer in wireless LAN communication may not be as stable as that in cable communication. A packet loss may occur depending on the surrounding environment and the installation location.
Make sure to validate the operation before using this product.
*6 When [Operation Mode] is set to [Access Point] in [Wireless LAN Setting] of GT Designer3, up to five stations are connectable to the wireless LAN access point (base station).
*7 Only available to GT2105.
*8 Available to GT2107-W, GT2105-Q, GT2104-R, GT2104-PMBD, GT2104-PMBDS, GT2103-PMBD, and GT2103-PMBDS.
*9 Not available to GT2512-WXTBD, GT2512-WXTSD, GT2510-WXTBD, GT2510-WXTSD, GT2507-WTBD, GT2507-WTSD, GT2507T-WTSD, GT2505-VTBD, GT2506HS-VTBD, and GT2505HS-VTBD.
*10 Only available to GT2505-VTBD.
*11 Not available to GT2505-VTBD, GT2506HS-VTBD and GT2505HS-VTBD.
*12 Not available to GT2505HS-VTBD.

■Hardware version and applicable wireless standards of the wireless LAN unit

○: Compliant —: Not compliant

Hardware version	Compliance status						Country where the unit can be used
	Japanese Radio Act	FCC standards	RE Directive (R&TTE Directive)*1	SRRC	KC	Radio Equipment Regulations (UKCA)	
A Manufactured from Dec. 2013	○	—	—	—	—	—	Japan only
B Manufactured from Oct. 2014	○	○	○	—	—	—	Japan, the United States, the EU member states, Switzerland, Norway, Iceland, and Liechtenstein
C Manufactured from Feb. 2016	○	○	○	—	—	—	
D Manufactured from May 2016	○	○	○	○	○	—	Japan, the United States, the EU member states, Switzerland, Norway, Iceland, Liechtenstein, China (excluding Hong Kong, Macao, and Taiwan), and South Korea
E Manufactured from Oct. 2017	○	○	○	○	○	—	
F Manufactured from Jul. 2019	○	○	○	○	○	—	
G Manufactured from Oct. 2021	○	○	○	○	○	○	Japan, the United States, the EU member states, the UK, Switzerland, Norway, Iceland, Liechtenstein, China (excluding Hong Kong, Macao, and Taiwan), and South Korea
H Manufactured from Jan. 2023	○	○	○	○	○	○	
J Manufactured from Mar. 2023	○	○	○	○	○	○	
K or later Manufactured from Feb. 2024	○	○	○	—	○	○	Japan, the United States, the EU member states, the UK, Switzerland, Norway, Iceland, Liechtenstein, and South Korea

*1 The wireless LAN unit complies with the RE Directive from March 31, 2017.

Option unit

Product name	Model	Specifications	Supported model			
			GT27	GT25	GT23	GT21
Printer unit	GT15-PRN	USB device (PictBridge) for printer connection, 1 channel Cable for connection between printer unit and printer (3m) included	○	○ *4	—	—
Multimedia unit	GT27-MMR-Z	For video input (NTSC/PAL), 1 channel, recording video/playing video files (A set of GT16M-MMR-Z and GT27-IF1000)	○ *1	—	—	—
Video input unit	GT27-V4-Z	For video input (NTSC/PAL), 4 channels (A set of GT16M-V4-Z and GT27-IF1000)	○ *1	—	—	—
RGB input unit	GT27-R2	For analog RGB input, 2 channels (Simultaneous display) *3	○ *1	—	—	—
	GT27-R2-Z	For analog RGB input, 2 channels (Display by channel) *3 (A set of GT16M-R2-Z and GT27-IF1000)	○ *1	—	—	—
Video/RGB input unit	GT27-V4R1-Z	For video input (NTSC/PAL), 4 channels/analog RGB, 1 channel input (A set of GT16M-V4R1-Z and GT27-IF1000)	○ *1	—	—	—
RGB output unit	GT27-ROUT	For analog RGB output, 1 channel	○ *1	—	—	—
	GT27-ROUT-Z	For analog RGB output, 1 channel (A set of GT16M-R2-Z and GT27-IF1000)	○ *1	—	—	—
Digital video output unit	GT27-VHOUT	For digital video output, 1 channel HDMI Type A connector	○ *1	—	—	—
Sound output unit	GT15-SOUT	For sound output (φ3.5 stereo pin jack)	○	○ *4	—	—
External I/O unit	GT15-DIOR	For connecting an external I/O device and an operation panel (Negative common input, source type output)	○	○ *4	—	—
	GT15-DIO	For connecting an external I/O device and an operation panel (Positive common input, sink type output)	○	○ *4	—	—
SD card unit	GT21-03SDCD	For installing an SD card	—	—	—	○ *2

*1 Not available to GT2705.
*2 Only available to GT2103-PMBD, GT2103-PMBDS, and GT2103-PMBDS2.
*3 The settings for GT27-R2 and GT27-R2-Z differ in the screen design software.
*4 Not available to GT2512-WXTBD, GT2512-WXTSD, GT2510-WXTBD, GT2510-WXTSD, GT2507-WTBD, GT2507-WTSD, GT2507T-WTSD, GT2505-VTBD, GT2506HS-VTBD, and GT2505HS-VTBD.

Software

Product name	Model	Description		
HMI/GOT Screen Design Software MELSOFT GT Works3	SW1DND-GTWK3-E	English version	Standard license product	DVD
	SW1DND-GTWK3-EC		Site license product[*1]	
	SW1DND-GTWK3-ECE		Site license product[*1]	Download
	SW1DND-GTWK3-EA		Volume license product [*2]	DVD
	SW1DND-GTWK3-EAZ		Additional license product [*2*7]	
	SW1DND-GTWK3-C	Simplified Chinese version	Standard license product	DVD
FA Integrated Engineering Software MELSOFT iQ Works [*3*4]	SW2DND-IQWK-E	English version	Standard license product	DVD
License key for GT SoftGOT2000 [*5]	GT27-SGTKEY-U	For USB port		
Remote Personal Computer Operation Function (Ethernet) License [*6]	GT25-PCRAKEY-1	1 license		
	GT25-PCRAKEY-5	5 licenses		
	GT25-PCRAKEY-10	10 licenses		
	GT25-PCRAKEY-20	20 licenses		
VNC Server Function License [*6]	GT25-VNCSKEY-1	1 license (License for GOT remote access function)		
	GT25-VNCSKEY-5	5 licenses		
	GT25-VNCSKEY-10	10 licenses		
	GT25-VNCSKEY-20	20 licenses		
MES I/F Function License [*6]	GT25-MESIFKEY-1	1 license		
	GT25-MESIFKEY-5	5 licenses		
	GT25-MESIFKEY-10	10 licenses		
	GT25-MESIFKEY-20	20 licenses		
GOT Mobile Function License [*6]	GT25-WEBSKEY-1	1 license		
	GT25-WEBSKEY-5	5 licenses		
	GT25-WEBSKEY-10	10 licenses		
	GT25-WEBSKEY-20	20 licenses		
GOT Mobile Function License for GT SoftGOT2000 [*10]	SGT2K-WEBSKEY-1	1 license		
	SGT2K-WEBSKEY-5	5 licenses		
GT Works Text to Speech License [*8]	SW1DND-GTVO-M	Standard license product		
GT Works3 add-on license for GOT2000 enhanced drive control (servo) project data [*9]	SW1DND-GTSV-MZ	Standard license product		

*1 Available for use only by individuals from the same corporation that purchased the product, its business offices (including overseas offices), public vocational training facilities, or other educational institutions, with no limitations on the number of computers or users.

*2 The desired number of licenses (2 or more) can be purchased. For details, please contact your local sales office.

*3 For details, refer to the MELSOFT iQ Works catalog (L(NA)08232ENG).

*4 The product includes the following software.
System Management Software [MELSOFT Navigator]
Programmable Controller Engineering Software [MELSOFT GX Works3, GX Works2, GX Developer]
Motion Controller Engineering Software [MELSOFT MT Works2]
GOT Screen Design Software [MELSOFT GT Works3]
Robot Engineering Software [MELSOFT RT ToolBox3 mini]
Inverter Setup Software [MELSOFT FR Configurator2]
Setting/monitoring tools for the C Controller module and MELSECWinCPU [MELSOFT CW Configurator]
Servo Setup Software [MELSOFT MR Configurator2]
MITSUBISHI ELECTRIC FA Library

*5 To use GT SoftGOT2000, each personal computer requires a license key for GT SoftGOT2000.

*6 One license is required for one GOT.

*7 This product does not include a DVD. The license certificate indicating the product ID number is issued only.

*8 To edit sound files, each personal computer requires one license.

*9 Each personal computer requires an add-on license to use add-on projects.

*10 Each personal computer with GT SoftGOT2000 installed requires one license.

Option

Option for GT27, GT25-W, GT25-S, GT25-V, GT23, and GT21

Product name	Model	Description		Supported model			
				GT27	GT25	GT23	GT21
Protective sheet [*1]	GT27-15PSGC	For 15”	Antiglare type Transparent With a hole for the USB environmental protection cover A set of 5 sheets	○	—	—	—
	GT25-12PSGC	For 12.1"		○	○	—	—
	GT25-10PSGC	For 10.4"		○	○	—	—
	GT25-08PSGC	For 8.4"		○	○	—	—
	GT25-05PSGC	For 5.7"		○	—	—	—
	GT25-05PSGC-2	For 5.7"		—	○	—	—
	GT25-12WPSGC	For 12.1" wide models	Antiglare type Transparent Without a hole for the USB environmental protection cover [*10] A set of 5 sheets	—	○	—	—
	GT25-10WPSGC	For 10.1" wide models		—	○	—	—
	GT21-07WPSGC	For 7" wide models		—	○	—	○
	GT27-15PSCC	For 15"	Clear type Transparent With a hole for the USB environmental protection cover A set of 5 sheets	○	—	—	—
	GT25-12PSCC	For 12.1"		○	○	—	—
	GT25-10PSCC	For 10.4"		○	○	—	—
	GT25-08PSCC	For 8.4"		○	○	—	—
	GT25-05PSCC	For 5.7"		○	—	—	—
	GT25-05PSCC-2	For 5.7"		—	○	—	—
	GT25-12WPSCC	For 12.1" wide models	Clear type Transparent Without a hole for the USB environmental protection cover [*10] A set of 5 sheets	—	○	—	—
	GT25-10WPSCC	For 10.1" wide models		—	○	—	—
	GT21-07WPSCC	For 7" wide models		—	○	—	○
	GT25-12PSCC-UC [*9]	For 12.1"	Clear type Transparent Without a hole for the USB environmental protection cover [*2] A set of 5 sheets	○ [*9]	○	—	—
	GT25-10PSCC-UC [*9]	For 10.4"		○ [*9]	○ [*9]	—	—
	GT25-08PSCC-UC [*9]	For 8.4"		○	○ [*9]	—	—
	GT21-05PSGC	For 5.7"	Antiglare type Transparent With a hole for the USB environmental protection cover A set of 5 sheets	—	—	—	○
	GT21-04RPSGC-UC	For 4.3"	Antiglare type Transparent A set of 5 sheets	—	—	—	○
	GT21-04PSGC-UC	For 4.5"		—	—	—	○
	GT21-03PSGC-UC	For 3.8"		—	—	—	○
	GT21-05PSCC	For 5.7"	Clear type Transparent With a hole for the USB environmental protection cover A set of 5 sheets	—	—	—	○
	GT21-04RPSCC-UC	For 4.3"	Clear type Transparent A set of 5 sheets	—	—	—	○
	GT21-04PSCC-UC	For 4.5"		—	—	—	○
	GT21-03PSCC-UC	For 3.8"		—	—	—	○

Product name	Model	Description		Supported model			
				GT27	GT25	GT23	GT21
Antibacterial/antiviral protective sheet*16	GT25-12PSAC	For 12.1"	Clear type Transparent With a hole for the USB environmental protection cover Made of acrylic (PMMA) A set of 5 sheets	○	○	—	—
	GT25-10PSAC	For 10.4"		○	○	—	—
	GT25-08PSAC	For 8.4"		○	○	—	—
UV protective sheet (for the rugged model)	GT25T-07WPSVC	For 7" rugged model	Antiglare type (UV cutoff) Transparent With a hole for the USB environmental protection cover 1 sheet	—	○ *12	—	—
Environmental protection sheet (for the open frame model)	GT25F-12ESGS	For 12.1"	For conforming to IP67F Antiglare type Silver 1 sheet	—	○ *7	—	—
	GT25F-10ESGS	For 10.4"		—	○ *7	—	—
	GT25F-08ESGS	For 8.4"		—	○ *7	—	—
USB environmental protection cover	GT25-UCOV	For 15/12.1/10.4/8.4"	Environmental protection cover for the USB interface on the GOT front face (for replacement)	○	○	—	—
	GT25-05UCOV	For 5.7"		○	—	—	—
	GT21-WUCOV	For 12.1" wide models/10.1" wide models/7" wide models/5.7"		—	○	—	○ *15
	GT14-50UCOV	For 5.7"		—	—	○	○
Protective cover for oil *3	GT20-15PCO	For 15"		○	—	—	—
	GT20-12PCO	For 12.1"		○	○	—	—
	GT20-10PCO	For 10.4"		○	○	○	—
	GT20-08PCO	For 8.4"		○	○	○	—
	GT25-05PCO	For 5.7"		○ *13	—	—	—
	GT25-05PCO-2	For 5.7"		—	○ *14	—	—
	GT21-12WPCO	For 12.1" wide models		—	○	—	—
	GT21-10WPCO	For 10.1" wide models		—	○	—	—
	GT21-07WPCO	For 7" wide models		—	○	—	○
	GT25T-07WPCO	For 7" rugged model		—	○ *12	—	—
	GT05-50PCO	For 5.7"		—	—	—	○
	GT21-04RPCO	For 4.3"		—	—	—	○
	GT10-30PCO	For 4.5"		—	—	—	○
	GT10-20PCO	For 3.8"		—	—	—	○
Stand	GT15-90STAND	For 15"		○	—	—	—
	GT15-80STAND	For 12.1"		○	○	—	—
	GT15-70STAND	For 10.4"/8.4"		○	○	○	—
	GT05-50STAND	For 5.7"		○	○	—	○
	GT25-10WSTAND	For 10.1" wide models		—	○	—	—
	GT21-07WSTAND	For 7" wide models		—	○	—	○
	GT25T-07WSTAND	For 7" rugged model		—	○ *12	—	—

Product name		Model	Description		Supported model			
					GT27	GT25	GT23	GT21
Memory card	SD card	NZ1MEM-2GBSD	SD memory card for GOT, 2 GB		○	○	○	○
		NZ1MEM-4GBSD	SDHC memory card for GOT, 4 GB		○	○	○	○
		NZ1MEM-8GBSD	SDHC memory card for GOT, 8GB		○	○	○	○
		NZ1MEM-16GBSD	SDHC memory card for GOT, 16GB		○	○	○	○
		L1MEM-2GBSD	SD memory card for GOT, 2 GB		○	○	○	○
		L1MEM-2GBSD	SDHC memory card for GOT, 4 GB		○	○	○	○
	CF card	GT05-MEM-128MC	CF card for GT27-MMR-Z, 128 MB		○	—	—	—
		GT05-MEM-256MC	CF card for GT27-MMR-Z, 256 MB		○	—	—	—
		GT05-MEM-512MC	CF card for GT27-MMR-Z, 512 MB		○	—	—	—
		GT05-MEM-1GC	CF card for GT27-MMR-Z, 1 GB		○	—	—	—
		GT05-MEM-2GC	CF card for GT27-MMR-Z, 2 GB		○	—	—	—
		GT05-MEM-256MC	CF card for GT27-MMR-Z, 4 GB		○	—	—	—
		GT05-MEM-256MC	CF card for GT27-MMR-Z, 8 GB		○	—	—	—
		GT05-MEM-256MC	CF card for GT27-MMR-Z, 16GB		○	—	—	—
Memory card adaptor		GT05-MEM-ADPC	Conversion adapter from CF card for GT27-MMR-Z to memory card (TYPE II)		○	—	—	—
Attachment *11		GT15-70ATT-98	For 10.4"	For replacing GT168□, GT158□, A985GOT *4	○	○	○	—
		GT15-70ATT-87		For replacing A870GOT-SWS/TWS or A8GT-70GOT-TB/TW/SB/SW	○	○	○	—
		GT15-60ATT-97	For 8.4"	For replacing GT167□, GT157□, or A97□GOT	○	○	○	—
		GT15-60ATT-96		For replacing A960GOT	○	○	○	—
		GT15-60ATT-87		For replacing A870GOT-EWS, A8GT-70GOTEB/EW, A77GOT-EL, or A77GOT-EL-S5/S3	○	○	○	—
		GT15-60ATT-77		For replacing A77GOT-CL, A77GOT-CL-S5/S3, A77GOT-L, or A77GOT-L-S5/S3	○	○	○	—
		GT15-50ATT-95W	For 5.7"	For replacing A956WGOT, F940WGOT	○	○	—	○
		GT15-50ATT-85		For replacing A85□GOT	○	○	—	○
		GT21-04RATT-40	For 4.3"	For replacing GT104□	—	—	—	○ *8
Battery		GT11-50BAT	Battery for backup of SRAM data, clock data, and system status log data. *6		○ (Replacement)	○ (Replacement)	○ (Option)	○ *5 (Replacement)
Special fitting *9		GT25-12FIT-EXS	For 12.1”	For compliance with the ATEX directive and KCs regulation	○	—	—	—
		GT25-10FIT-EXS	For 10.4”		○	○	—	—

*1 The white model does not have a front USB interface.
Use a protective sheet without a hole for the USB environmental protection cover.
*2 When using a protective sheet without a hole for the USB environmental protection cover, the front USB interface cannot be used.
*3 Check if the protective cover for oil can be used in the actual environment before use.
When using the protective cover for oil, you cannot use the front USB interface and the human sensor.
*4 Including the GP250□ and GP260□ manufactured by SCHNEIDER EJH.
*5 GT2103-P does not have a built-in battery.
*6 GT21 does not support the system status log data backup function.
*7 Only available to GT2512F-S, GT2510F-V, and GT2508F-V.
*8 Only available to GT2104-RTBD.
*9 Necessary for the GOT to comply with the ATEX directive and KCs regulation.
For applicable GOT models, refer to Mitsubishi Electric FA Global Website.
www.MitsubishiElectric.com/fa
*10 The protective sheet is shaped not to cover the USB environmental protection cover.
*11 An attachment is usable when the control panel has a thickness of 2 to 3 mm.
When an attachment is used, the GOT is not IP67F-rated.
*12 Only available to GT2507T-W.
*13 Only available to GT2705-V.
*14 Only available to GT2505-V.
*15 Only available to GT2107-W.
*16 Not available to the open frame models and wide models.

Option for GT25HS-V

○: Usable, -: Not usable

Product name	Model	Description		Supported model	
				GT2506HS-V	GT2505HS-V
Protective sheet	GT16H-60PSC	For 6.5”	Clear type A set of 5 sheets	○	—
	GT14H-50PSC	For 5.7”	Clear type A set of 5 sheets	—	○
Emergency stop switch guard cover	GT16H-60ESCOV	Cover for preventing the emergency stop switch incorrect operation		○	—
	GT14H-50ESCOV			—	○
SD card	NZ1MEM-2GBSD	SD memory card for GOT, 2 GB		—	○
	NZ1MEM-4GBSD	SDHC memory card for GOT, 4 GB		○	○
	NZ1MEM-8GBSD	SDHC memory card for GOT, 8 GB		○	○
	NZ1MEM-16GBSD	SDHC memory card for GOT, 16 GB		○	○
Battery	GT15-BAT	Battery for backing up SRAM data, clock data, and system status log data		○	—
	GT11-50BAT			—	○
Connector conversion box	GT16H-CNB-42S	With a D-sub connector and an Ethernet RJ45 connector		○	○
	GT16H-CNB-37S	With an Ethernet RJ45 connector		○	○
	GT11H-CNB-37S	With a D-sub connector		—	○
Wall-mounting attachment	GT14H-50ATT	For Handy GOT		—	○

Cable

Cable for MITSUBISHI PLC

For external dimensions of cable for MITSUBISHI PLC, refer to the following.

☞ Page 428 External Dimension Diagrams of the Communication Cable

Product name		Model	Cable length	Recommended product *1	Specifications	Supported model			
						GT 27	GT 25	GT 23	GT 21
QCPU bus connection cable	QCPU connection cable GOT-to-GOT connection cable	GT15-QC06B	0.6 m	○	For connecting the QCPU and the GOT For connecting the GOTs	○	○ *14	—	—
		GT15-QC12B	1.2 m						
		GT15-QC30B	3 m						
		GT15-QC50B	5 m						
		GT15-QC100B	10 m						
	QCPU connection cable GOT-to-GOT connection cable (long distance)	GT15-QC150BS	15 m	○	For connecting the QCPU and the GOT (long distance), A9GTQCNB is required For connecting the GOTs (long distance)	○	○ *14	—	—
		GT15-QC200BS	20 m						
		GT15-QC250BS	25 m						
		GT15-QC300BS	30 m						
		GT15-QC350BS	35 m						
Bus extension connector box		A9GT-QCNB	—	—	Connect the connector box to the main base unit of PLC when connecting the QCPU and the GOT (long distance)	○	○ *14	—	—
Ferrite core for the bus connection cable		GT15-QFC	—	○	Attach a ferrite core to the GOTA900 bus connection cable when an existing GOT-A900 is replaced with a GOT2000. (two ferrite cores/set)	○	○ *14	—	—
RS-485 terminal block conversion unit		FA-LTBGT2R4CBL05	0.5 m	○	RS-485 terminal block conversion unit with a cable for connecting RS-422/485 (connector) of GOT2000 and a RS-485 terminal block conversion unit	○	○ *21	—	—
		FA-LTBGT2R4CBL10	1 m						
		FA-LTBGT2R4CBL20	2 m						
RS-422 connector conversion cable		FA-CNV2402CBL	0.2 m	○	For connecting the QCPU/ L02SCPU(-P) and the RS-422 cable (GT01-C□R4-25P, GT10-C□R4-25P, GT21-C□R4-25P5) For connecting the L6ADPR2 and the RS-422 cable (GT01-C□R4-25P, GT10-C□R4-25P, GT21-C□R4-25P5) [MINI-DIN 6-pin ← → D-sub 25-pin]	○	○	○	○ *12
		FA-CNV2405CBL	0.5 m						

Product name		Model	Cable length	Recommended product *1	Specifications	Supported model			
						GT 27	GT 25	GT 23	GT 21
RS-422 cable	QnA/A/FXCPU direct connection cable Computer link connection cable CC-Link (G4) connection cable	GT01-C30R4-25P	3 m	—	For connecting the QnA/ACPU/ Motion CPU (A series)/FXCPU and the GOT For connection between the RS-422 connector conversion cable (FACNV□CBL) and the GOT For connection between the serial communication module and the GOT For connection between the peripheral connection module (AJ65BT-G4-S3) and the GOT [D-sub 25-pin ←→ D-sub 9-pin]	○	○ *20	○	○ *3*7
		GT01-C100R4-25P	10 m						
		GT01-C200R4-25P	20 m						
		GT01-C300R4-25P	30 m						
		GT10-C30R4-25P	3 m	—	For connecting the QnA/ACPU/ Motion CPU (A series)/FXCPU and the GOT For connection between the RS-422 connector conversion cable (FACNV□CBL) and the GOT For connection between the serial communication module and the GOT For connecting the peripheral connection module (AJ65BT-G4-S3) and the GOT [D-sub 25-pin ← → separate wire (Connector terminal block 9-pin)]	—	—	—	○ *10
		GT10-C100R4-25P	10 m						
		GT10-C200R4-25P	20 m						
		GT10-C300R4-25P	30 m						
		GT21-C30R4-25P5	3 m	—	For connecting the QnACPU and the GOT For connecting the RS-422 connector conversion cable (FA-CNV□CBL) and the GOT For connection between the serial communication module and the GOT For connection between the peripheral connection module (AJ65BT-G4-S3) and the GOT [D-sub 25-pin ← → separate wire (Connector terminal block 5-pin)] * GT2104-PMBD and GT2103-PMBD cannot be connected to Q00JCPU, Q00CPU, Q01CPU, A series, FX1 series, or FX2 series.	—	—	—	○ *2
		GT21-C100R4-25P5	10 m						
		GT21-C200R4-25P5	20 m						
		GT21-C300R4-25P5	30 m						
	Computer link connection cable	GT09-C30R4-6C	3 m	○	For connecting the serial communication module and the GOT For connection between the computer link module and the GOT [Separate wire ←→ D-sub 9-pin]	○	○ *20	○	○ *3*7
		GT09-C100R4-6C	10 m						
		GT09-C200R4-6C	20 m						
		GT09-C300R4-6C	30 m						

Product name		Model	Cable length	Recommended product *1	Specifications	Supported model			
						GT 27	GT 25	GT 23	GT 21
RS-422 cable	FXCPU direct connection cable FXCPU communication function extension board connection cable	GT01-C10R4-8P	1 m	—	For connection between the FXCPU and the GOT For connecting the FXCPU communication function extension board and the GOT [MINI-DIN 8-pin ←→ D-sub 9-pin]	○	○ *20	○	○ *3*7
		GT01-C30R4-8P	3 m						
		GT01-C100R4-8P	10 m						
		GT01-C200R4-8P	20 m						
		GT01-C300R4-8P	30 m						
		GT10-C10R4-8P	1 m	—	For connection between the FXCPU and the GOT For connecting the FXCPU communication function extension board and the GOT [MINI-DIN 8-pin ← → separate wire (Connector terminal block 9-pin)]	—	—	—	○ *4
		GT10-C30R4-8P	3 m						
		GT10-C100R4-8P	10 m						
		GT10-C200R4-8P	20 m						
		GT10-C300R4-8P	30 m						
		GT21-C10R4-8P5	1 m	—	For connection between the FXCPU and the GOT For connecting the FXCPU communication function extension board and the GOT [MINI-DIN 8-pin ← → separate wire (Connector terminal block 5-pin)]	—	—	○	○ *2
		GT21-C30R4-8P5	3 m						
		GT21-C100R4-8P5	10 m						
		GT21-C200R4-8P5	20 m						
		GT21-C300R4-8P5	30 m						
		GT10-C10R4-8PL	1 m	—	For connection between the FXCPU and the GOT For connecting the FXCPU communication function extension board and the GOT [MINI-DIN 8-pin ← → separate wire (Connector terminal block 9-pin)] * This cable cannot be used for FX1NC, FX2NC, FX3UC-D/DSS, FX3G, FX3GC, and FX3S.	—	—	○	○ *4
		GT10-C10R4-8PC	1 m	—	For connection between the FXCPU and the GOT For connecting the FXCPU communication function extension board and the GOT [MINI-DIN 8-pin ← → connector terminal block 9-pin with separate wire connected]	—	—	○	○ *4
		GT10-C30R4-8PC	3 m						
		GT10-C100R4-8PC	10 m						
		GT10-C200R4-8PC	20 m						
		GT10-C300R4-8PC	30 m						
	RS-422 connector conversion cable	GT10-C02H-9SC	0.2 m	—	For connecting the PLC and the GOT [D-sub 9-pin ← → separate wire (Connector terminal block 9-pin)]	—	—	○	○ *10

Product name		Model	Cable length	Recommended product *1	Specifications	Supported model			
						GT 27	GT 25	GT 23	GT 21
RS-232 cable	Q/LCPU direct connection cable	GT01-C30R2-6P	3 m	—	For connection between the Q/LCPU and the GOT For connection between the L6ADP-R2 and the GOT/personal computer (GT SoftGOT2000) [MINI-DIN 6-pin ← → D-sub 9-pin]	○	○ *18	○	○ *5*8
		GT10-C30R2-6P	3 m	—	For connection between the Q/LCPU and the GOT [MINI-DIN 6-pin ← → separate wire (Connector terminal block 9-pin)]	—	—	○	○ *6
					For connecting multiple GOTs [MINI-DIN 6-pin ← → separate wire (Connector terminal block 9-pin)]	—	—	○	○ *11
		GT11H-C30R2-6P	3 m	—	For connecting a QCPU or LCPU and the connector conversion box for Handy GOT	—	○ *17	—	—
	FXCPU communication function extension board connection cable FXCPU communication special adapter connection cable	GT01-C30R2-9S	3 m	—	For connecting the FXCPU communication expansion board and the GOT/personal computer (GT SoftGOT2000) For connecting an FXCPU communication special adapter and the GOT/personal computer (GT SoftGOT2000) [D-sub 9-pin ←→ D-sub 9-pin]	○	○	○	○ *5*8
	FXCPU communication special adapter connection cable	GT01-C30R2-25P	3 m	—	For connecting an FXCPU communication special adapter and the GOT/personal computer (GT SoftGOT2000) [D-sub 25-pin ←→ D-sub 9-pin]	○	○	○	○ *5*8
	Computer link connection cable CC-Link (G4) connection cable	GT09-C30R2-9P	3 m	○	For connecting the serial communication module and the GOT For connection between the computer link module and the GOT For connecting the peripheral connection module (AJ65BTR2N) and the GOT [D-sub 9-pin ←→ D-sub 9-pin]	○	○	○	○ *5*8
RS-232 cable	Computer link connection cable	GT09-C30R2-25P	3 m	○	For connecting the serial communication module and the GOT For connection between the computer link module and the GOT [D-sub 25-pin ←→ D-sub 9-pin]	○	○	○	○ *5*8
	RS-232 connector conversion cable	GT10-C02H-6PT9P	0.2 m	—	For connecting the PLC and the GOT For connecting multiple GOTs For connecting the barcode reader, RFID, or serial printer and the GOT [D-sub 9-pin ← → MINI-DIN 6-pin]	—	—	—	○ *11
	Data transfer cable	GT01-C30R2-6P	3 m	—	For connecting the GOT and the personal computer [D-sub 9-pin ←→ MINI-DIN 6-pin] * This cable is usable for the FA transparent function only, and cannot be used to transfer screen or OS data.	—	—	—	○ *11

Product name		Model	Cable length	Recommended product *1	Specifications	Supported model			
						GT 27	GT 25	GT 23	GT 21
Conversion cable for connecting the external I/O unit		GT15-C03HTB	0.3 m	○	For connecting an external I/O unit (GT15-DIO) and external I/O interface unit (A8GT-C05TK, A8GTC30TB, user-fabricated cable) for GOT-A900	○	○ *14	—	—
Analog RGB cable		GT15-C50VG	5 m	○	For connecting an RGB video output device (external monitor, personal computer, or others) and GOT	○	—	—	—
USB cable	Data transfer cable Printer connection cable	GT09-C30USB-5P	3 m	○	For connecting a personal computer (screen design software) and the GOT For connecting a personal computer (GT SoftGOT2000) and QnU/L/FXCPU For connecting a PictBridge-compatible printer and printer unit (GT15-PRN) [USB-A ←→ USB Mini-B]	○	○	○	○ *9
Extended USB waterproof cable		GT14-C10EXUSB-4S	1 m	—	For routing the USB port (Host) of the GOT rear face to the front side of the control panel	○	○	—	○ *13
		GT10-C10EXUSB-5S	1 m	—	For routing the USB port (Device) of the GOT rear face to the front side of the control panel	○ *15	○ *15	—	○ *16
External cable		GT16H-C30-42P	3 m	—	For connection between the Handy GOT and the connector conversion box (GT16H-CNB-42S)	—	○ *17	—	—
		GT16H-C60-42P	6 m			—	○ *17	—	—
		GT16H-C100-42P	10 m			—	○ *17	—	—
		GT14H-C30-42P	3 m			—	○ *19	—	—
		GT14H-C60-42P	6 m			—	○ *19	—	—
		GT14H-C100-42P	10 m			—	○ *19	—	—
		GT16H-C30-37PE	3 m	—	For connection between the Handy GOT and the connector conversion box (GT16H-CNB-37S)	—	○ *17	—	—
		GT16H-C60-37PE	6 m			—	○ *17	—	—
		GT16H-C100-37PE	10 m			—	○ *17	—	—
		GT11H-C30-37P	3 m		For connection between the Handy GOT and the connector conversion box (GT16H-CNB-37S and GT11H-CNB-37S) For connection between the Handy GOT and the relay cable (GT11H-C15R□-□P)	—	○ *19	—	—
		GT11H-C60-37P	6 m			—	○ *19	—	—
		GT11H-C100-37P	10 m			—	○ *19	—	—
		GT11H-C30	3 m	—	For connection between the Handy GOT and the FA device, the power supply, or the operation switch	—	○ *19	—	—
		GT11H-C60	6 m			—	○ *19	—	—
		GT11H-C100	10 m			—	○ *19	—	—
Relay cable		GT11H-C15R4-8P	1.5 m	—	For connecting to the PLC	—	○ *19	—	—
		GT11H-C15R4-25P	1.5 m			—	○ *19	—	—
		GT11H-C15R2-6P	1.5 m			—	○ *19	—	—

*1 FA-LTBGT2R4CBL□, FA-CNV240□CBL are developed by Mitsubishi Electric Engineering Company Limited and sold through your local sales office.
The other products listed are developed by Mitsubishi Electric Systems & Service Co., LTD. and sold through your local sales office.
*2 This cable is usable for GT2104-PMBD, GT2103-PMBD.
*3 This cable is usable for GT2107-WTBD, GT2107-WTSD, GT2105-QTBDS, GT2105-QMBDS, GT2104-RTBD, GT2104-PMBDS, GT2103-PMBDS.
*4 Only available to GT2104-RTBD, GT2104-PMBDS, GT2104-PMBLS, GT2103-PMBDS, and GT2103-PMBLS.
For GT2104-PMBLS and GT2103-PMBLS, use a 3 m or shorter cable.
*5 This cable is usable for GT2107-WTBD, GT2107-WTSD, GT2105-QTBDS, GT2105-QMBDS, GT2104-PMBDS, GT2104-PMBDS2, GT2103-PMBDS, GT2103-PMBDS2.
*6 Only available to GT2104-RTBD, GT2104-PMBDS2, and GT2103-PMBDS2.
*7 Available to GT2104-RTBD, GT2104-PMBDS, and GT2103-PMBDS when the RS-422 connector conversion cable (GT10-C02H-9SC) is used together.
*8 This cable is usable for GT2104-PMBDS, GT2104-PMBDS2, GT2103-PMBDS, and GT2103-PMBDS2 with the RS-232 connector conversion cable GT10-C02H-6PT9P.
*9 This cable is not usable for the printer connection.
*10 This cable is usable for GT2104-RTBD, GT2104-PMBDS, GT2103-PMBDS.
*11 Only available to GT2104-PMBDS, GT2104-PMBDS2, GT2103-PMBDS, and GT2103-PMBDS2.
*12 This cable is usable for GT2107-WTBD, GT2107-WTSD, GT2105-QTBDS, GT2105-QMBDS, GT2104-RTBD, GT2104-PMBD, GT2104-PMBDS, GT2103-PMBD, GT2103-PMBDS.
*13 This cable is usable for GT2107-WTBD, GT2107-WTSD.
*14 Not available to GT2512-WXTBD, GT2512-WXTSD, GT2510-WXTBD, GT2510-WXTSD, GT2507-WTBD, GT2507-WTSD, GT2507T-WTSD, GT2505-VTBD, GT2506HS-VTBD, and GT2505HS-VTBD.
*15 Available to GT2712-STWA, GT2712-STWD, GT2710-VTWA, GT2710-VTWD, GT2512F-STNA, GT2512F-STND, GT2510-VTWA, GT2510-VTWD, GT2510F-VTNA, GT2510F-VTND, GT2508-VTWA, GT2508-VTWD, GT2508F-VTNA, GT2508F-VTND, and GT2507T-WTSD
*16 This cable is usable for GT2104-RTBD, GT2104-PMBD, GT2104-PMBDS, GT2104-PMBDS2, GT2104-PMBLS, GT2103-PMBD, GT2103-PMBDS, GT2103-PMBDS2, GT2103-PMBLS.
*17 Only available to GT2506HS-VTBD.
*18 Not available to GT2506HS-VTBD and GT2505HS-VTBD
*19 Only available to GT2505HS-VTBD
*20 The total length of the cables between the Handy GOT and a controller includes the length of external cable.
A cable of 20 m or longer cannot be used for GT2506HS-VTBD and GT2505HS-VTBD.
For the details, refer to the following.
GOT2000 Series Handy GOT Connection Manual For GT Works3 Version1
*21 Not available to GT2505-VTBD, GT2506HS-VTBD, and GT2505HS-VTBD

Cable for OMRON PLC

Product name	Model	Cable length	Specifications	Supported model			
				GT27	GT25	GT23	GT21
RS-232 cable	GT09-C30R20101-9P	3 m	For connecting the OMRON PLC/serial communication module/communication board and the GOT	○	○	○	○ *1
	GT09-C30R20102-25S	3 m	For connecting the OMRON connection cable and the GOT				
	GT09-C30R20103-25P	3 m	For connecting the OMRON rack type host link unit and the GOT				
RS-422 cable	GT09-C30R40101-9P	3 m	For connecting the OMRON PLC/serial communication module/serial communication board and the GOT	○	○	○	○ *2
	GT09-C100R40101-9P	10 m					
	GT09-C200R40101-9P	20 m					
	GT09-C300R40101-9P	30 m					
	GT09-C30R40102-9P	3 m	For connecting the OMRON rack type host link unit and the GOT	○	○	○	○ *2
	GT09-C100R40102-9P	10 m					
	GT09-C200R40102-9P	20 m					
	GT09-C300R40102-9P	30 m					
	GT09-C30R40103-5T	3 m	For connecting the OMRON communication board and the GOT	○	○	○	○ *2
	GT09-C100R40103-5T	10 m					
	GT09-C200R40103-5T	20 m					
	GT09-C300R40103-5T	30 m					

*1 Available to GT2104-PMBDS, GT2104-PMBDS2, GT2103-PMBDS, and GT2103-PMBDS2 when the RS-232 connector conversion cable (GT10-C02H-6PT9P) is used together.

*2 Available to GT2104-RTBD, GT2104-PMBDS, and GT2103-PMBDS when the RS-422 connector conversion cable (GT10-C02H-9SC) is used together.

Cable for KEYENCE PLC

Product name	Model	Cable length	Specifications	Supported model			
				GT27	GT25	GT23	GT21
RS-232 cable	GT09-C30R21101-6P	3 m	For connecting the KEYENCE PLC and the GOT	○	○	○	○ *1
	GT09-C30R21102-9S	3 m	For connecting the KEYENCE multi-communication unit and the GOT				
	GT09-C30R21103-3T	3 m					
RS-422 cable	GT09-C30R41101-5T	3 m	For connecting the KEYENCE multi-communication unit and the GOT	○	○	○	○ *2
	GT09-C100R41101-5T	10 m					
	GT09-C200R41101-5T	20 m					
	GT09-C300R41101-5T	30 m					

*1 Available to GT2104-PMBDS, GT2104-PMBDS2, GT2103-PMBDS, and GT2103-PMBDS2 when the RS-232 connector conversion cable (GT10-C02H-6PT9P) is used together.

*2 Available to GT2104-RTBD, GT2104-PMBDS, and GT2103-PMBDS when the RS-422 connector conversion cable (GT10-C02H-9SC) is used together.

Cable for SHARP PLC

Product name	Model	Cable length	Specifications	Supported model			
				GT27	GT25	GT23	GT21
RS-232 cable	GT09-C30R20601-15P	3 m	For connecting the SHARP PLC and the GOT	○	○	○	—
	GT09-C30R20602-15P	3 m					
RS-422 cable	GT09-C30R40601-15P	3 m	For connecting the SHARP PLC and the GOT	○	○	○	—
	GT09-C100R40601-15P	10 m					
	GT09-C200R40601-15P	20 m					
	GT09-C300R40601-15P	30 m					
	GT09-C30R40602-15P	3 m					
	GT09-C100R40602-15P	10 m					
	GT09-C200R40602-15P	20 m					
	GT09-C300R40602-15P	30 m					
	GT09-C30R40603-6T	3 m					
	GT09-C100R40603-6T	10 m					
	GT09-C200R40603-6T	20 m					
	GT09-C300R40603-6T	30 m					

Cable for JTEKT PLC

Product name	Model	Cable length	Specifications	Supported model			
				GT27	GT25	GT23	GT21
RS-232 cable	GT09-C30R21201-25P	3 m	For connecting the JTEKT PLC and the GOT	○	○	○	—
RS-422 cable	GT09-C30R41201-6C	3 m	For connecting the JTEKT PLC and the GOT	○	○	○	—
	GT09-C100R41201-6C	10 m					
	GT09-C200R41201-6C	20 m					
	GT09-C300R41201-6C	30 m					

Cable for SHINKO indicating controller

Product name	Model	Cable length	Specifications	Supported model			
				GT27	GT25	GT23	GT21
RS-232 cable	GT09-C30R21401-4T	3 m	For connecting the SHINKO indicating controller and the GOT	○	○	○	—

Cable for TOSHIBA PLC

Product name	Model	Cable length	Specifications	Supported model			
				GT27	GT25	GT23	GT21
RS-232 cable	GT09-C30R20501-9P	3 m	For connecting the TOSHIBA PLC and the GOT	○	○	○	—
	GT09-C30R20502-15P	3 m					
RS-422 cable	GT09-C30R40501-15P	3 m	For connecting the TOSHIBA PLC and the GOT	○	○	○	—
	GT09-C100R40501-15P	10 m					
	GT09-C200R40501-15P	20 m					
	GT09-C300R40501-15P	30 m					
	GT09-C30R40502-6C	3 m					
	GT09-C100R40502-6C	10 m					
	GT09-C200R40502-6C	20 m					
	GT09-C300R40502-6C	30 m					
	GT09-C30R40503-15P	3 m					
	GT09-C100R40503-15P	10 m					
	GT09-C200R40503-15P	20 m					
	GT09-C300R40503-15P	30 m					

Cable for HITACHI IES PLC

Product name	Model	Cable length	Specifications	Supported model			
				GT27	GT25	GT23	GT21
RS-232 cable	GT09-C30R20401-15P	3 m	For connecting the HITACHI IES PLC/intelligent serial port module and the GOT	○	○	○	—
	GT09-C30R20402-15P	3 m	For connecting the HITACHI IES PLC and the GOT	○	○	○	—
RS-422 cable	GT09-C30R40401-7T	3 m	For connecting the HITACHI IES intelligent serial port module and the GOT	○	○	○	—
	GT09-C100R40401-7T	10 m					
	GT09-C200R40401-7T	20 m					
	GT09-C300R40401-7T	30 m					

Cable for HITACHI PLC

Product name	Model	Cable length	Specifications	Supported model			
				GT27	GT25	GT23	GT21
RS-232 cable	GT09-C30R21301-9S	3 m	For connecting the HITACHI communication module and the GOT	○	○	○	—
RS-422 cable	GT09-C30R41301-9S	3 m	For connecting the HITACHI PLC/communication module and the GOT	○	○	○	—
	GT09-C100R41301-9S	10 m					
	GT09-C200R41301-9S	20 m					
	GT09-C300R41301-9S	30 m					

Cable for FUJI FA PLC

Product name	Model	Cable length	Specifications	Supported model			
				GT27	GT25	GT23	GT21
RS-232 cable	GT09-C30R21003-25P	3 m	For connecting the FUJI FA RS-232C interface card/ RS-232C interface capsule/RS-485 interface capsule/ general-purpose interface module and the GOT	○	○	○	—
RS-422 cable	GT09-C30R41001-6T	3 m	For connecting the FUJI FA RS-232C interface capsule/ 485 interface capsule/general-purpose interface module and the GOT	○	○	○	—
	GT09-C100R41001-6T	10 m					
	GT09-C200R41001-6T	20 m					
	GT09-C300R41001-6T	30 m					

Cable for Panasonic IDS PLC

Product name	Model	Cable length	Specifications	Supported model			
				GT27	GT25	GT23	GT21
RS-232 cable	GT09-C30R20901-25P	3 m	For connecting the Panasonic IDS RS-422/RS-232C conversion adapter and the GOT	○	○	○	○ *1
	GT09-C30R20902-9P	3 m	For connecting the Panasonic IDS PLC/computer communication unit and the GOT	○	○	○	○ *1
	GT09-C30R20903-9P	3 m	For connecting the Panasonic IDS PLC and the GOT	○	○	○	○ *1
	GT09-C30R20904-3C	3 m					

*1 Available to GT2104-PMBDS, GT2104-PMBDS2, GT2103-PMBDS, and GT2103-PMBDS2 when the RS-232 connector conversion cable (GT10-C02H-6PT9P) is used together.

Cable for YASKAWA PLC

Product name	Model	Cable length	Specifications	Supported model			
				GT27	GT25	GT23	GT21
RS-232 cable	GT09-C30R20201-9P	3 m	For connecting the YASKAWA PLC and the GOT	○	○	○	○ *1
	GT09-C30R20202-15P	3 m					
	GT09-C30R20203-9P	3 m					
	GT09-C30R20204-14P	3 m					
	GT09-C30R20205-25P	3 m	For connecting the YASKAWA MEMOBUS module and the GOT	○	○	○	○ *1
RS-422 cable	GT09-C30R40201-9P	3 m	For connecting the YASKAWA MEMOBUS module and the GOT	○	○	○	○ *2
	GT09-C100R40201-9P	10 m					
	GT09-C200R40201-9P	20 m					
	GT09-C300R40201-9P	30 m					
	GT09-C30R40202-14P	3 m	For connecting the YASKAWA PLC and the GOT	○	○	○	○ *2
	GT09-C100R40202-14P	10 m					
	GT09-C200R40202-14P	20 m					
	GT09-C300R40202-14P	30 m					

*1 Available to GT2104-PMBDS, GT2104-PMBDS2, GT2103-PMBDS, and GT2103-PMBDS2 when the RS-232 connector conversion cable (GT10-C02H-6PT9P) is used together.

*2 Available to GT2104-RTBD, GT2104-PMBDS, and GT2103-PMBDS when the RS-422 connector conversion cable (GT10-C02H-9SC) is used together.

Cable for YOKOGAWA PLC and temperature controller

Product name	Model	Cable length	Specifications	Supported model			
				GT27	GT25	GT23	GT21
RS-232 cable	GT09-C30R20301-9P	3 m	For connecting the YOKOGAWA CPU port/D-sub 9-pin conversion cable and the GOT	○	○	○	—
	GT09-C30R20302-9P	3 m	For connecting the YOKOGAWA PC link module and the GOT	○	○	○	—
	GT09-C30R20304-9S	3 m	For connection the YOKOGAWA converter (ML2-□) and the GOT	○	○	○	—
	GT09-C30R20305-9S	3 m	For connecting the YOKOGAWA PLC and the GOT	○	○	○	—
RS-422 cable	GT09-C30R40301-6T	3 m	For connecting the YOKOGAWA PC link module and the GOT	○	○	○	—
	GT09-C100R40301-6T	10 m					
	GT09-C200R40301-6T	20 m					
	GT09-C300R40301-6T	30 m					
	GT09-C30R40302-6T	3 m					
	GT09-C100R40302-6T	10 m					
	GT09-C200R40302-6T	20 m					
	GT09-C300R40302-6T	30 m					
	GT09-C30R40303-6T	3 m	For connecting the YOKOGAWA temperature controller (GREEN series) and the GOT	○	○	○	—
	GT09-C100R40303-6T	10 m					
	GT09-C200R40303-6T	20 m					
	GT09-C300R40303-6T	30 m					
	GT09-C30R40304-6T	3 m	For connecting the YOKOGAWA temperature controller (UT2000 series) and the GOT	○	○	○	—
	GT09-C100R40304-6T	10 m					
	GT09-C200R40304-6T	20 m					
	GT09-C300R40304-6T	30 m					

ALLEN-BRADLEY PLC cables

Product name	Model	Cable length	Specifications	Supported model			
				GT27	GT25	GT23	GT21
RS-232 cable	GT09-C30R20701-9S	3 m	For connecting the ALLEN-BRADLEY PLC and the GOT	○	○	○	○ *1

*1 Available to GT2104-PMBDS, GT2104-PMBDS2, GT2103-PMBDS, and GT2103-PMBDS2 when the RS-232 connector conversion cable (GT10-C02H-6PT9P) is used together.

Cable for SIEMENS PLC

Product name	Model	Cable length	Specifications	Supported model			
				GT27	GT25	GT23	GT21
RS-232 cable	GT09-C30R20801-9S	3 m	For connecting the SIEMENS HMI Adapter and the GOT	○	○	○	○ *1

*1 Available to GT2104-PMBDS, GT2104-PMBDS2, GT2103-PMBDS, and GT2103-PMBDS2 when the RS-232 connector conversion cable (GT10-C02H-6PT9P) is used together.

Others

Peripherals

Of the following peripheral devices, you can use some models that we validated.

For the validated models expect the SD cards, refer to the following Technical Bulletin.

📖List of Valid Devices Applicable for GOT2000 Series and GOT SIMPLE Series (for Overseas) (GOT-A-0160)

For the validated models of the SD cards, refer to the following Technical Bulletin.

📖Information of valid Non-Mitsubishi SD cards applicable for GOT2000 series (GOT-A-0065)

For Technical Bulletins, go to the MITSUBISHI ELECTRIC FA Global Website.

www.MitsubishiElectric.com/fa

Product name		Overview
Barcode reader	RS-232 connection	Commercially available product
	USB connection	
2D code reader	RS-232 connection	
	USB connection	
RFID controller	RS-232 connection	
	USB connection	
USB mouse		
USB keyboard		
Memory card reader/writer		
SD card		
USB memory		
Hub		
Wireless LAN access point		
Video camera		
Speaker		

3 SPECIFICATIONS

- Page 59 General Specifications
- Page 66 Performance Specifications
- Page 110 Specifications of Power Supply Section
- Page 118 Battery Specifications

3.1 General Specifications

This section describes the general specifications of the GOT.

GT27, GT2512-WX, GT2510-WX, GT2507-W, GT25-S, GT25-V

Item	Specifications					
Operating ambient temperature *1	0 °C to 55 °C *2*7					
Storage ambient temperature	-20°C to 60°C					
Operating ambient humidity	10% RH to 90% RH, non-condensing *8					
Storage ambient humidity	10% RH to 90% RH, non-condensing *8					
Vibration resistance	Compliant with JIS B3502 and IEC 61131-2		Frequency	Acceleration	Half amplitude	Sweep count
		Under intermittent vibration	5 Hz to 8.4 Hz	—	3.5 mm	X, Y, or Z 10 times in each direction
			8.4 Hz to 150 Hz	9.8 m/s^2	—	
		Under continuous vibration	5 Hz to 8.4 Hz	—	1.75 mm	—
			8.4 Hz to 150 Hz	4.9 m/s^2	—	
Shock resistance	Compliant with JIS B3502 and IEC 61131-2 (147 m/s^2(15 G), 3 times in each X, Y, or Z direction)					
Operating atmosphere *6	No greasy fumes, corrosive gas, flammable gas, excessive conductive dust, and direct sunlight (as well as at storage)					
Operating altitude *3	2000 m or less					
Installation location	Inside control panel					
Overvoltage category *4	II or less					
Pollution degree *5	2 or less					
Cooling method	Self-cooling					
Grounding	Grounding with a ground resistance of 100 Ω or less by using a ground cable that has a cross-sectional area of 2 mm^2 or more. If impossible, connect the ground cable to the control panel.					

*1 Indicates the temperature inside the enclosure of the control panel on which the GOT is installed.

*2 When any of the following units is mounted, the maximum operating ambient temperature must be 5°C lower than the one described in the general specifications.
GT27:
Multimedia unit (GT27-MMR-Z)
MELSECNET/H communication unit (GT15-J71LP23-25, GT15-J71BR13)
CC-Link communication unit (GT15-J61BT13)
Protective cover for oil
GT25 (Except for GT25-W, GT2505-V):
MELSECNET/H communication unit (GT15-J71LP23-25, GT15-J71BR13)
CC-Link communication unit (GT15-J61BT13)
Protective cover for oil
GT25-W, GT2505-V:
Protective cover for oil

*3 Do not use or store the GOT under a pressure higher than the atmospheric pressure at an altitude 0 m.
Doing so may cause a malfunction.
Air purging by applying pressure to the control panel may create clearance between the surface sheet and the touch panel. This may cause the touch panel to be not sensitive enough or the sheet to come off.

*4 This indicates the power distribution section to which the equipment is assumed to be connected, between the public power grid and the machinery within the premises.
Category II applies to equipment for which electrical power is supplied from fixed facilities.
The withstand surge voltage for the equipment with the rated voltage up to 300 V is 2500 V.

*5 This indicates the occurrence rate of conductive material in an environment where a device is used. Pollution degree 2 indicates an environment where only non-conductive pollution occurs normally and a temporary conductivity caused by condensation shall be expected depending on the conditions.

*6 Some models have ANSI/ISA12.12.01 approval for use in Class I, Division 2 (ANSI/ISA 12.12.01, C22.2 No.213-M1987) hazardous locations.
For applicable GOT models, refer to Mitsubishi Electric FA Global Website.
www.MitsubishiElectric.com/fa

*7 For the vertically-oriented GT2505, the operating ambient temperature must be 0 to 50°C.

*8 If the ambient temperature of GT2505-V exceeds 40°C, observe the maximum absolute humidity that is calculated based on 90% RH at 40°C.

GT2507T-W

⚠CAUTION

- The GOT rugged model uses the environmental protection sheet (not replaceable) with UV protection function on the front surface.
  Therefore, it is possible to suppress deterioration of the touch panel or the liquid crystal display panel that may be caused by ultraviolet rays.
  Note that if the rugged model is exposed to ultraviolet rays for an extended period of time, the front surface may turn yellow.
  If the rugged model is likely to be exposed to ultraviolet rays for an extended period of time, it is recommended to use a UV protective sheet (option).

Item	Specifications *5					
Operating ambient temperature *1*6	-20 °C to 65 °C					
Storage ambient temperature	-30 °C to 75 °C					
Operating ambient humidity	10% RH to 90% RH, non-condensing					
Storage ambient humidity	10% RH to 90% RH, non-condensing					
Vibration resistance	IEC 60068-2-6		Frequency	Acceleration	Half amplitude	Sweep count
		Under intermittent vibration	5 Hz to 8.4 Hz	—	7.0 mm	X, Y, or Z 10 times in each Z direction
			8.4 Hz to 150 Hz	19.6m/s^2	—	
		Under continuous vibration	5 Hz to 8.4 Hz	—	7.0 mm	—
			8.4 Hz to 150 Hz	19.6 m/s^2	—	
Shock resistance	IEC 60068-2-27 (392 m/s^2(40 G), 3 times in each X, Y, or Z direction)					
Operating atmosphere	No greasy fumes, corrosive gas, flammable gas, excessive conductive dust, and direct sunlight (as well as at storage)					
Operating altitude *2	2000 m or less					
Installation location	Inside control panel (used indoors)					
Overvoltage category *3	II or less					
Pollution degree *4	2 or less					
Cooling method	Self-cooling					
Grounding	Grounding with a ground resistance of 100 Ω or less by using a ground cable that has a cross-sectional area of 2 mm^2 or more. If impossible, connect the ground cable to the control panel.					

*1 Indicates the temperature inside the enclosure of the control panel on which the GOT is installed.

*2 Do not use or store the GOT under a pressure higher than the atmospheric pressure at an altitude 0 m.
Doing so may cause a malfunction.
Air purging by applying pressure to the control panel may create clearance between the surface sheet and the touch panel. This may cause the touch panel to be not sensitive enough or the sheet to come off.

*3 This indicates the power distribution section to which the equipment is assumed to be connected, between the public power grid and the machinery within the premises.
Category II applies to equipment for which electrical power is supplied from fixed facilities.
The withstand surge voltage for the equipment with the rated voltage up to 300 V is 2500 V.

*4 This indicates the occurrence rate of conductive material in an environment where a device is used. Pollution degree 2 indicates an environment where only non-conductive pollution occurs normally and a temporary conductivity caused by condensation shall be expected depending on the conditions.

*5 Communication units and options usable with the rugged model can be used in the environment described in the general specifications of the rugged model.
However, when a protective cover for oil is mounted on the GOT, the operating ambient temperature must be -20°C to 50°C.
For using peripheral devices to be connected to the GOT, refer to the manual of each device.

*6 To avoid burns, do not touch the front panel when operating in environments of 60°C or higher.

GT25HS-V

Item	Specifications					
Operating ambient temperature	0 °C to 40 °C					
Storage ambient temperature	-20 °C to 60 °C					
Operating ambient humidity	10% RH to 90% RH, non-condensing					
Storage ambient humidity	10% RH to 90% RH, non-condensing					
Vibration resistance	Compliant with JIS B3502 and IEC 61131-2		Frequency	Acceleration	Half amplitude	Sweep count
		Under intermittent vibration	5 Hz to 8.4 Hz	—	3.5 mm	X, Y, or Z 10 times in each direction
			8.4 Hz to 150 Hz	9.8 m/s^2	—	
		Under continuous vibration	5 Hz to 8.4 Hz	—	1.75 mm	—
			8.4 Hz to 150 Hz	4.9 m/s^2	—	
Shock resistance	Compliant with JIS B3502 and IEC 61131-2 (147 m/s^2(15 G), 3 times in each X, Y, or Z direction)					
Operating atmosphere	No greasy fumes, corrosive gas, flammable gas, excessive conductive dust, and direct sunlight (as well as at storage)					
Operating altitude *1	2000 m or less					
Overvoltage category *2	II or less					
Pollution degree *3	2 or less					
Cooling method	Self-cooling					
Grounding	Grounding with a ground resistance of 100 Ω or less by using a ground cable that has a cross-sectional area of 2 mm^2 or more. If impossible, connect the ground cable to the control panel.					

*1 Do not use or store the GOT under a pressure higher than the atmospheric pressure at an altitude 0 m.
Doing so may cause a malfunction.

*2 This indicates the power distribution section to which the equipment is assumed to be connected, between the public power grid and the machinery within the premises.
Category II applies to equipment for which electrical power is supplied from fixed facilities.
The withstand surge voltage for the equipment with the rated voltage up to 300 V is 2500 V.

*3 This indicates the occurrence rate of conductive material in an environment where a device is used.
Pollution degree 2 indicates an environment where only non-conductive pollution occurs normally and a temporary conductivity caused by condensation shall be expected depending on the conditions.

GT23

Item	Specifications					
Operating ambient temperature *1	0 to 55°C					
Storage ambient temperature	-20°C to 60°C					
Operating ambient humidity	10% RH to 90% RH, non-condensing *2					
Storage ambient humidity	10% RH to 90% RH, non-condensing *2					
Vibration resistance	Compliant with JIS B3502 and IEC 61131-2		Frequency	Acceleration	Half amplitude	Sweep count
		Under intermittent vibration	5 Hz to 8.4 Hz	—	3.5 mm	X, Y, or Z 10 times in each direction
			8.4 Hz to 150 Hz	9.8 m/s^2	—	
		Under continuous vibration	5 Hz to 8.4 Hz	—	1.75 mm	—
			8.4 Hz to 150 Hz	4.9 m/s^2	—	
Shock resistance	Compliant with JIS B3502 and IEC 61131-2 (147 m/s^2(15 G), 3 times in each X, Y, or Z direction)					
Operating atmosphere	No greasy fumes, corrosive gas, flammable gas, excessive conductive dust, and direct sunlight (as well as at storage)					
Operating altitude *3	2000 m or less					
Installation location	Inside control panel					
Overvoltage category *4	II or less					
Pollution degree *5	2 or less					
Cooling method	Self-cooling					
Grounding	Grounding with a ground resistance of 100 Ω or less by using a ground cable that has a cross-sectional area of 2 mm^2 or more. If impossible, connect the ground cable to the control panel.					

*1 Indicates the temperature inside the enclosure of the control panel on which the GOT is installed.

*2 If the ambient temperature exceeds 40 °C, the absolute humidity must not exceed 90% at 40 °C.

*3 Do not use or store the GOT under a pressure higher than the atmospheric pressure at an altitude 0 m.
Doing so may cause a malfunction.
Air purging by applying pressure to the control panel may create clearance between the surface sheet and the touch panel. This may cause the touch panel to be not sensitive enough or the sheet to come off.

*4 This indicates the power distribution section to which the equipment is assumed to be connected, between the public power grid and the machinery within the premises.
Category II applies to equipment for which electrical power is supplied from fixed facilities.
The withstand surge voltage for the equipment with the rated voltage up to 300 V is 2500 V.

*5 This indicates the occurrence rate of conductive material in an environment where a device is used. Pollution degree 2 indicates an environment where only non-conductive pollution occurs normally and a temporary conductivity caused by condensation shall be expected depending on the conditions.

GT21

Item	Specifications					
Operating ambient temperature *1	0°C to 55°C *7(Horizontal installation), 0°C to 50°C (Vertical installation)					
Storage ambient temperature	-20°C to 60°C					
Operating ambient humidity	10% RH to 90% RH, non-condensing *2					
Storage ambient humidity	10% RH to 90% RH, non-condensing *2					
Vibration resistance	Compliant with JIS B3502 and IEC 61131-2		Frequency	Acceleration	Half amplitude	Sweep count
		Under intermittent vibration	5 Hz to 8.4 Hz	—	3.5 mm	X, Y, or Z 10 times in each direction
			8.4 Hz to 150 Hz	9.8 m/s^2	—	
		Under continuous vibration	5 Hz to 8.4 Hz	—	1.75 mm	—
			8.4 Hz to 150 Hz	4.9 m/s^2	—	
Shock resistance	Compliant with JIS B3502 and IEC 61131-2 (147 m/s^2(15 G), 3 times in each X, Y, or Z direction)					
Operating atmosphere	No greasy fumes, corrosive gas, flammable gas, excessive conductive dust, and direct sunlight (as well as at storage)					
Operating altitude *3	2000 m or less					
Installation location	Inside control panel					
Overvoltage category *4	II or less					
Pollution degree *5	2 or less					
Cooling method	Self-cooling					
Grounding	For GT2107-W and GT2105: Grounding with a ground resistance of 100 Ω or less by using a ground cable that has a cross-sectional area of 2 mm^2 or more. If impossible, connect the ground cable to the control panel. For GT2104 and GT2103: Grounding with a ground resistance of 100 Ω or less by using a ground cable that has a cross-sectional area of 0.14 to 1.5 mm^2 (solid wire), 0.14 to 1.0 mm^2 (stranded wire), or 0.25 to 0.5 mm^2 (rod terminal with an insulation sleeve). If impossible, connect the ground cable to the control panel. *6					

*1 Indicates the temperature inside the enclosure of the control panel on which the GOT is installed.

*2 If the ambient temperature exceeds 40 °C, the absolute humidity must not exceed 90% at 40 °C.

*3 Do not use or store the GOT under a pressure higher than the atmospheric pressure at an altitude 0 m.
Doing so may cause a malfunction.
Air purging by applying pressure to the control panel may create clearance between the surface sheet and the touch panel. This may cause the touch panel to be not sensitive enough or the sheet to come off.

*4 This indicates the power distribution section to which the equipment is assumed to be connected, between the public power grid and the machinery within the premises.
Category II applies to equipment for which electrical power is supplied from fixed facilities.
The withstand surge voltage for the equipment with the rated voltage up to 300 V is 2500 V.

*5 This indicates the occurrence rate of conductive material in an environment where a device is used. Pollution degree 2 indicates an environment where only non-conductive pollution occurs normally and a temporary conductivity caused by condensation shall be expected depending on the conditions.

*6 For the 5 V DC type, grounding is unnecessary.

*7 When a protective cover for oil is mounted on the GOT, the maximum operating ambient temperature must be 5°C lower than the one described above.

MEMO

3.2 Performance Specifications

The following shows the performance specifications of the GOT.

GT27

GT2715-X

Item		Specifications
		GT2715-XTBA GT2715-XTBD
Display section [*1][*2]	Display device	TFT color LCD
	Screen size	15"
	Resolution	XGA: 1024 × 768 dots
	Display size	304.1 (11.97) (W) × 228.1 (8.98) (H) mm (inch)
	Number of displayed characters	16-dot standard font: 64 characters × 48 lines (2-byte) 12-dot standard font: 85 characters × 64 lines (2-byte)
	Display color	65536 colors
	Brightness Adjustment	32 levels
	Backlight	LED (Not replaceable)
	Backlight life [*4]	Approx. 60000 h (Ambient temperature: 25°C, display intensity: 50%)
Touch panel [*3]	Type	Analog resistive film
	Key size	Minimum 2 × 2 dots [*6] (per key)
	Simultaneous press	Up to two points
	Life	1 million touches or more (Operating force: 0.98 N or less)
Human sensor[*9]	Detection length	1 m
	Detection temperature	Temperature difference between human body and ambient air: 4 °C or higher
User memory	User memory capacity	Memory for storage (ROM): 57 MB, Memory for operation (RAM): 256 MB[*8]
	Life (number of write times)	100000 times
Built-in clock precision		±90 seconds/month (Ambient temperature: 25 °C)
Battery		GT11-50BAT lithium battery
	Life	Approx. 5 years (Ambient temperature: 25 °C)
Built-in interface	RS-232	1 channel, transmission speed: 115200, 57600, 38400, 19200, 9600, 4800 bps Connector shape: D-sub 9-pin (male)
	RS-422/485	1 channel, transmission speed: 115200, 57600, 38400, 19200, 9600, 4800 bps Connector shape: D-sub 9-pin (female)
	Ethernet	1 channel Data transfer method: 100BASE-TX, 10BASE-T Connector shape: RJ45 (modular jack) AUTO MDI/MDI-X
	USB (Host)	2 channels (front face and rear face)
		USB 2.0 (High-Speed 480 Mbps), Connector shape: USB-A
	USB (Device)	1 channel (front face)
		USB 2.0 (High-Speed 480 Mbps), Connector shape: USB Mini-B
	SD card	1 channel, SDHC compliant (maximum 32 GB)
	Extension interface	For installing a communication unit or an option unit
	Auxiliary extension interface	For installing an option unit
	Side interface	For installing a communication unit
Buzzer output		Single tone (tone and tone length adjustable)
POWER LED		2 colors (blue and orange)
Protective structure		Front: IP67F [*5][*7] In control panel: IP2X
External dimensions		397 (15.63) (W) × 300 (11.81) (H) × 60 (2.36) (D) mm (inch)
Panel cutting dimensions		383.5 (15.10) (W) × 282.5 (11.12) (H) mm (inch)
Weight (excluding a fitting)		4.5 (9.9) kg (lb)
Compatible software package		GT Works3 Version1.112S or later

*1 As a characteristic of liquid crystal display panels, bright dots (always lit) and dark dots (never lit) may appear on the panel.
Since liquid crystal display panels comprise a great number of display elements, the appearance of bright and dark dots cannot be reduced to zero.
Individual differences in liquid crystal display panels may cause differences in color, uneven brightness and flickering.
Note that these phenomena are characteristics of liquid crystal display panels and it does not mean the products are defective or damaged.

*2 Flickering may occur due to vibration, shock, or the display colors.

*3 When a stylus is used, the touch panel has a life of 100 thousand touches.
The stylus must satisfy the following specifications.
Material: Polyacetal resin
Tip radius: 0.8 mm or more

*4 To prevent the display section from burning in and lengthen the backlight life, enable the screen save function and turn off the backlight.

*5 To conform to IP67F, close the USB environmental protection cover by pushing the [PUSH] mark firmly. (The GOT conforms to IP2X when the USB environmental protection cover is open.)
Note that the structure does not guarantee protection in all users' environments. The GOT should not be used in environments where it may be exposed to oil or chemicals for a long period of time, or where oil mist fills the air.

*6 Minimum size of a key that can be arranged.
To ensure safe use of the product, the following settings are recommended.
Key size: 16 × 16 dots or larger
Distance between keys: 16 dots or more

*7 The suffix "F" of IP67F is a symbol that indicates protection rate against oil.
It is described in the Appendix of JIS C 0920 of the Japanese Industrial Standards.

*8 If the function version is B or earlier, the memory for operation (RAM) is 128 MB.

*9 A human body hardly moving, moving toward the GOT front face, or moving rapidly may not be detected.
Heat sources other than human bodies may be detected.
Static electricity, electrical noises, and infrared rays can cause a false reaction.

GT2712-S

Item		Specifications	
		GT2712-STBA GT2712-STBD	GT2712-STWA GT2712-STWD
Display section [*1*2]	Display device	TFT color LCD	
	Screen size	12.1”	
	Resolution	SVGA: 800 × 600 dots	
	Display size	246 (9.69) (W) × 184.5 (7.26) (H) mm (inch)	
	Number of displayed characters	16-dot standard font: 50 characters × 37 lines (two-byte characters) 12-dot standard font: 66 characters × 50 lines (two-byte characters)	
	Display color	65536 colors	
	Brightness Adjustment	32 levels	
	Backlight	LED (Not replaceable)	
	Backlight life [*4]	Approx. 60000 h (Ambient temperature: 25°C, display intensity: 50%)	
Touch panel [*3]	Type	Analog resistive film	
	Key size	Minimum 2 × 2 dots (per key) [*6]	
	Simultaneous press	Up to two points	
	Life	1 million touches or more (Operating force: 0.98 N or less)	
Human sensor [*9]	Detection length	1 m	
	Detection temperature	Temperature difference between human body and ambient air: 4 °C or higher	
User memory	User memory capacity	Memory for storage (ROM): 57 MB, Memory for operation (RAM): 256 MB [*8]	
	Life (number of write times)	100000 times	
Built-in clock precision		±90 seconds/month (Ambient temperature: 25 °C)	
Battery		GT11-50BAT lithium battery	
	Life	Approx. 5 years (Ambient temperature: 25 °C)	
Built-in interface	RS-232	1 channel, transmission speed: 115200, 57600, 38400, 19200, 9600, 4800 bps Connector shape: D-sub 9-pin (male)	
	RS-422/485	1 channel, transmission speed: 115200, 57600, 38400, 19200, 9600, 4800 bps Connector shape: D-sub 9-pin (female)	
	Ethernet	1 channel Data transfer method: 100BASE-TX, 10BASE-T Connector shape: RJ45 (modular jack) AUTO MDI/MDI-X	
	USB (Host)	2 channels (front face and rear face)	1 channel (rear face)
		USB 2.0 (High-Speed 480 Mbps), Connector shape: USB-A	
	USB (Device)	1 channel (front face)	1 channel (rear face)
		USB 2.0 (High-Speed 480 Mbps), Connector shape: USB Mini-B	
	SD card	1 channel, SDHC compliant (maximum 32 GB)	
	Extension interface	For installing a communication unit or an option unit	
	Auxiliary extension interface	For installing an option unit	
	Side interface	For installing a communication unit	
Buzzer output		Single tone (tone and tone length adjustable)	
POWER LED		2 colors (blue and orange)	
Protective structure		Front: IP67F [*5*7] In control panel: IP2X	
External dimensions		316 (12.44) (W) × 246 (9.69) (H) × 52 (2.05) (D) mm (inch)	
Panel cutting dimensions		302 (11.89) (W) × 228 (8.98) (H) mm (inch)	
Weight (excluding a fitting)		2.4 (5.3) kg (lb)	
Compatible software package		GT Works3 Version1.100E or later	

*1 As a characteristic of liquid crystal display panels, bright dots (always lit) and dark dots (never lit) may appear on the panel.
Since liquid crystal display panels comprise a great number of display elements, the appearance of bright and dark dots cannot be reduced to zero.
Individual differences in liquid crystal display panels may cause differences in color, uneven brightness and flickering.
Note that these phenomena are characteristics of liquid crystal display panels and it does not mean the products are defective or damaged.

*2 Flickering may occur due to vibration, shock, or the display colors.

*3 When a stylus is used, the touch panel has a life of 100 thousand touches.
The stylus must satisfy the following specifications.
Material: Polyacetal resin
Tip radius: 0.8 mm or more

*4 To prevent the display section from burning in and lengthen the backlight life, enable the screen save function and turn off the backlight.

*5 To conform to IP67F, close the USB environmental protection cover by pushing the [PUSH] mark firmly. (The GOT conforms to IP2X when the USB environmental protection cover is open.)
Note that the structure does not guarantee protection in all users' environments. The GOT should not be used in environments where it may be exposed to oil or chemicals for a long period of time, or where oil mist fills the air.

*6 Minimum size of a key that can be arranged.
To ensure safe use of the product, the following settings are recommended.
Key size: 16 × 16 dots or larger
Distance between keys: 16 dots or more

*7 The suffix "F" of IP67F is a symbol that indicates protection rate against oil.
It is described in the Appendix of JIS C 0920 of the Japanese Industrial Standards.

*8 If the function version is B or earlier, the memory for operation (RAM) is 128 MB.

*9 A human body hardly moving, moving toward the GOT front face, or moving rapidly may not be detected.
Heat sources other than human bodies may be detected.
Static electricity, electrical noises, and infrared rays can cause a false reaction.

GT2710-S, GT2710-V

Item		Specifications		
		GT2710-STBA GT2710-STBD	GT2710-VTBA GT2710-VTBD	GT2710-VTWA GT2710-VTWD
Display section [*1*2]	Display device	TFT color LCD		
	Screen size	10.4"		
	Resolution	SVGA: 800 × 600 dots	VGA: 640 × 480 dots	
	Display size	211.2 (8.31) (W) × 158.4 (6.24) (H) mm (inch)		
	Number of displayed characters	16-dot standard font: 50 characters × 37 lines (two-byte characters) 12-dot standard font: 66 characters × 50 lines (two-byte characters)	16-dot standard font: 40 characters × 30 lines (two-byte characters) 12-dot standard font: 53 characters × 40 lines (two-byte characters)	
	Display color	65536 colors		
	Brightness Adjustment	32 levels		
	Backlight	LED (Not replaceable)		
	Backlight life [*4]	Approx. 60000 h (Ambient temperature: 25°C, display intensity: 50%)		
Touch panel [*3]	Type	Analog resistive film		
	Key size	Minimum 2 × 2 dots [*6] (per key)		
	Simultaneous press	Up to two points		
	Life	1 million touches or more (Operating force: 0.98 N or less)		
Human sensor	Detection length	—		
	Detection temperature	—		
User memory	User memory capacity	Memory for storage (ROM): 57 MB, Memory for operation (RAM): 256 MB[*8]		
	Life (number of write times)	100000 times		
Built-in clock precision		±90 seconds/month (Ambient temperature: 25 °C)		
Battery		GT11-50BAT lithium battery		
	Life	Approx. 5 years (Ambient temperature: 25 °C)		
Built-in interface	RS-232	1 channel, transmission speed: 115200, 57600, 38400, 19200, 9600, 4800 bps Connector shape: D-sub 9-pin (male)		
	RS-422/485	1 channel, transmission speed: 115200, 57600, 38400, 19200, 9600, 4800 bps Connector shape: D-sub 9-pin (female)		
	Ethernet	1 channel Data transfer method: 100BASE-TX, 10BASE-T Connector shape: RJ45 (modular jack) AUTO MDI/MDI-X		
	USB (Host)	2 channels (front face and rear face)		1 channel (rear face)
		USB 2.0 (High-Speed 480 Mbps), Connector shape: USB-A		
	USB (Device)	1 channel (front face)		1 channel (rear face)
		USB 2.0 (High-Speed 480 Mbps), Connector shape: USB Mini-B		
	SD card	1 channel, SDHC compliant (maximum 32 GB)		
	Extension interface	For installing a communication unit or an option unit		
	Auxiliary extension interface	For installing an option unit		
	Side interface	For installing a communication unit		
Buzzer output		Single tone (tone and tone length adjustable)		
POWER LED		2 colors (blue and orange)		
Protective structure		Front: IP67F [*5*7] In control panel: IP2X		
External dimensions		303 (11.93) (W) × 218 (8.58) (H) × 52 (2.05) (D) mm (inch)		
Panel cutting dimensions		289 (11.38) (W) × 200 (7.87) (H) mm (inch)		
Weight (excluding a fitting)		2.1 (4.6) kg (lb)		
Compatible software package		GT Works3 Version1.100E or later		

*1 As a characteristic of liquid crystal display panels, bright dots (always lit) and dark dots (never lit) may appear on the panel.
Since liquid crystal display panels comprise a great number of display elements, the appearance of bright and dark dots cannot be reduced to zero.
Individual differences in liquid crystal display panels may cause differences in color, uneven brightness and flickering.
Note that these phenomena are characteristics of liquid crystal display panels and it does not mean the products are defective or damaged.

*2 Flickering may occur due to vibration, shock, or the display colors.

*3 When a stylus is used, the touch panel has a life of 100 thousand touches.
The stylus must satisfy the following specifications.
Material: Polyacetal resin
Tip radius: 0.8 mm or more

*4 To prevent the display section from burning in and lengthen the backlight life, enable the screen save function and turn off the backlight.

*5 To conform to IP67F, close the USB environmental protection cover by pushing the [PUSH] mark firmly. (The GOT conforms to IP2X when the USB environmental protection cover is open.)
Note that the structure does not guarantee protection in all users' environments. The GOT should not be used in environments where it may be exposed to oil or chemicals for a long period of time, or where oil mist fills the air.

*6 Minimum size of a key that can be arranged.
To ensure safe use of the product, the following settings are recommended.
Key size: 16 × 16 dots or larger
Distance between keys: 16 dots or more

*7 The suffix "F" of IP67F is a symbol that indicates protection rate against oil.
It is described in the Appendix of JIS C 0920 of the Japanese Industrial Standards.

*8 If the function version is B or earlier, the memory for operation (RAM) is 128 MB.

GT2708-S, GT2708-V

Item		Specifications	
		GT2708-STBA GT2708-STBD	GT2708-VTBA GT2708-VTBD
Display section [*1*2]	Display device	TFT color LCD	
	Screen size	8.4"	
	Resolution	SVGA: 800 × 600 dots	VGA: 640 × 480 dots
	Display size	170.9 (6.73) (W) × 128.2 (5.05) (H) mm (inch)	
	Number of displayed characters	16-dot standard font: 50 characters × 37 lines (two-byte characters) 12-dot standard font: 66 characters × 50 lines (two-byte characters)	16-dot standard font: 40 characters × 30 lines (two-byte characters) 12-dot standard font: 53 characters × 40 lines (two-byte characters)
	Display color	65536 colors	
	Brightness Adjustment	32 levels	
	Backlight	LED (Not replaceable)	
	Backlight life [*4]	Approx. 60000 h (Ambient temperature: 25°C, display intensity: 50%)	
Touch panel [*3]	Type	Analog resistive film	
	Key size	Minimum 2 × 2 dots [*6] (per key)	
	Simultaneous press	Up to two points	
	Life	1 million touches or more (Operating force: 0.98 N or less)	
Human sensor	Detection length	—	
	Detection temperature	—	
User memory	User memory capacity	Memory for storage (ROM): 57 MB, Memory for operation (RAM): 256 MB [*8]	
	Life (number of write times)	100000 times	
Built-in clock precision		±90 seconds/month (Ambient temperature: 25 °C)	
Battery		GT11-50BAT lithium battery	
	Life	Approx. 5 years (Ambient temperature: 25 °C)	
Built-in interface	RS-232	1 channel, transmission speed: 115200, 57600, 38400, 19200, 9600, 4800 bps Connector shape: D-sub 9-pin (male)	
	RS-422/485	1 channel, transmission speed: 115200, 57600, 38400, 19200, 9600, 4800 bps Connector shape: D-sub 9-pin (female)	
	Ethernet	1 channel Data transfer method: 100BASE-TX, 10BASE-T Connector shape: RJ45 (modular jack) AUTO MDI/MDI-X	
	USB (Host)	2 channels (front face and rear face)	
		USB 2.0 (High-Speed 480 Mbps), Connector shape: USB-A	
	USB (Device)	1 channel (front face)	
		USB 2.0 (High-Speed 480 Mbps), Connector shape: USB Mini-B	
	SD card	1 channel, SDHC compliant (maximum 32 GB)	
	Extension interface	For installing a communication unit or an option unit	
	Auxiliary extension interface	For installing an option unit	
	Side interface	For installing a communication unit	
Buzzer output		Single tone (tone and tone length adjustable)	
POWER LED		2 colors (blue and orange)	
Protective structure		Front: IP67F [*5*7] In control panel: IP2X	
External dimensions		241 (9.49) (W) × 194 (7.64) (H) × 52 (2.05) (D) mm (inch)	
Panel cutting dimensions		227 (8.94) (W) × 176 (6.93) (H) mm (inch)	
Weight (excluding a fitting)		1.5 (3.3) kg (lb)	
Compatible software package		GT Works3 Version1.100E or later	

*1 As a characteristic of liquid crystal display panels, bright dots (always lit) and dark dots (never lit) may appear on the panel.
Since liquid crystal display panels comprise a great number of display elements, the appearance of bright and dark dots cannot be reduced to zero.
Individual differences in liquid crystal display panels may cause differences in color, uneven brightness and flickering.
Note that these phenomena are characteristics of liquid crystal display panels and it does not mean the products are defective or damaged.

*2 Flickering may occur due to vibration, shock, or the display colors.

*3 When a stylus is used, the touch panel has a life of 100 thousand touches.
The stylus must satisfy the following specifications.
Material: Polyacetal resin
Tip radius: 0.8 mm or more

*4 To prevent the display section from burning in and lengthen the backlight life, enable the screen save function and turn off the backlight.

*5 To conform to IP67F, close the USB environmental protection cover by pushing the [PUSH] mark firmly. (The GOT conforms to IP2X when the USB environmental protection cover is open.)
Note that the structure does not guarantee protection in all users' environments. The GOT should not be used in environments where it may be exposed to oil or chemicals for a long period of time, or where oil mist fills the air.

*6 Minimum size of a key that can be arranged.
To ensure safe use of the product, the following settings are recommended.
Key size: 16 × 16 dots or larger
Distance between keys: 16 dots or more

*7 The suffix "F" of IP67F is a symbol that indicates protection rate against oil.
It is described in the Appendix of JIS C 0920 of the Japanese Industrial Standards.

*8 If the function version is B or earlier, the memory for operation (RAM) is 128 MB.

GT2705-V

Item		Specifications
		GT2705-VTBD
Display section *1*2	Display device	TFT color LCD
	Screen size	5.7”
	Resolution	VGA: 640 × 480 dots
	Display size	115.2 (4.54) (W) × 86.4 (3.40) (H) mm (inch)
	Number of displayed characters	16-dot standard font: 40 characters × 30 lines (two-byte characters) 12-dot standard font: 53 characters × 40 lines (two-byte characters)
	Display color	65536 colors
	Brightness Adjustment	32 levels
	Backlight	LED (Not replaceable)
	Backlight life *4	Approx. 60000 h (Ambient temperature: 25°C, display intensity: 50%)
Touch panel *3	Type	Analog resistive film
	Key size	Minimum 2 × 2 dots *7 (per key)
	Simultaneous press	Up to two points
	Life	1 million touches or more (Operating force: 0.98 N or less)
Human sensor	Detection length	—
	Detection temperature	—
User memory	User memory capacity	Memory for storage (ROM): 32 MB, Memory for operation (RAM): 80 MB
	Life (number of write times)	100000 times
Built-in clock precision		±90 seconds/month (Ambient temperature: 25 °C)
Battery		GT11-50BAT lithium battery
	Life	Approx. 5 years (Ambient temperature: 25 °C)
Built-in interface	RS-232	1 channel, transmission speed: 115200, 57600, 38400, 19200, 9600, 4800 bps Connector shape: D-sub 9-pin (male)
	RS-422/485	1 channel, transmission speed: 115200, 57600, 38400, 19200, 9600, 4800 bps Connector shape: D-sub 9-pin (female)
	Ethernet	1 channel Data transfer method: 100BASE-TX, 10BASE-T Connector shape: RJ45 (modular jack) AUTO MDI/MDI-X
	USB (Host)	2 channels (front face and rear face)
		USB 2.0 (High-Speed 480 Mbps), Connector shape: USB-A
	USB (Device)	1 channel (front face)
		USB 2.0 (High-Speed 480 Mbps), Connector shape: USB Mini-B
	SD card	1 channel, SDHC compliant (maximum 32 GB)
	Extension interface *6	For installing a communication unit or an option unit
	Auxiliary extension interface	—
	Side interface	For installing a communication unit
Buzzer output		Single tone (tone and tone length adjustable)
POWER LED		2 colors (blue and orange)
Protective structure		Front: IP67F *5*8 In control panel: IP2X
External dimensions		167 (6.57) (W) × 139 (5.47) (H) × 60 (2.36) (D) mm (inch)
Panel cutting dimensions		153 (6.02) (W) × 121 (4.76) (H) mm (inch)
Weight (excluding a fitting)		1.0 (2.2) kg (lb)
Compatible software package		GT Works3 Version1.130L or later

*1 As a characteristic of liquid crystal display panels, bright dots (always lit) and dark dots (never lit) may appear on the panel.
Since liquid crystal display panels comprise a great number of display elements, the appearance of bright and dark dots cannot be reduced to zero.
Individual differences in liquid crystal display panels may cause differences in color, uneven brightness and flickering.
Note that these phenomena are characteristics of liquid crystal display panels and it does not mean the products are defective or damaged.

*2 Flickering may occur due to vibration, shock, or the display colors.

*3 When a stylus is used, the touch panel has a life of 100 thousand touches.
The stylus must satisfy the following specifications.
Material: Polyacetal resin
Tip radius: 0.8 mm or more

*4 To prevent the display section from burning in and lengthen the backlight life, enable the screen save function and turn off the backlight.

*5 To conform to IP67F, close the USB environmental protection cover by pushing the [PUSH] mark firmly. (The GOT conforms to IP2X when the USB environmental protection cover is open.)
Note that the structure does not guarantee protection in all users' environments. The GOT should not be used in environments where it may be exposed to oil or chemicals for a long period of time, or where oil mist fills the air.

*6 When multiple devices such as extension units, a barcode reader, and an RFID controller are connected, the total amount of current must be within the maximum amount of current supplied by the GOT.
For the amount of current required for an extension unit, a barcode reader, or an RFID controller, and the maximum amount of current supplied by the GOT, refer to the following.
☞ Page 436 Calculating Consumed Current of GT2705-V

*7 The minimum size of a key that can be arranged.
To ensure safe use of the product, the following settings are recommended.
Key size: 16 × 16 dots or larger
Distance between keys: 16 dots or more

*8 The suffix "F" of IP67F is a symbol that indicates protection rate against oil.
It is described in the Appendix of JIS C 0920 of the Japanese Industrial Standards.

GT2512-WX, GT2510-WX, GT2507-W

GT2512-WX

Item		Specifications
		GT2512-WXTBD GT2512-WXTSD
Display section [*1][*2]	Display device	TFT color LCD
	Screen size	12.1" wide screen
	Resolution	WXGA: 1280 × 800 dots
	Display size	261.12 (10.28) (W) × 163.2 (6.43) (H) mm (inch)
	Number of displayed characters	16-dot standard font: 80 characters × 50 lines (two-byte characters) 12-dot standard font: 106 characters × 66 lines (two-byte characters)
	Display color	65536 colors
	Brightness Adjustment	32 levels
	Backlight	LED (Not replaceable)
	Backlight life [*4]	Approx. 50000 h (Ambient temperature: 25°C, display intensity: 50%)
Touch panel [*3]	Type	Analog resistive film
	Key size	Minimum 2 × 2 dots [*7] (per key)
	Simultaneous press	Not available [*5] (Only 1 point can be touched.)
	Life	1 million touches or more (Operating force: 0.98 N or less)
Human sensor	Detection length	—
	Detection temperature	—
User memory	User memory capacity	Memory for storage (ROM): 32 MB, Memory for operation (RAM): 128 MB
	Life (number of write times)	100000 times
Built-in clock precision		±90 seconds/month (Ambient temperature: 25 °C)
Battery		GT11-50BAT lithium battery
	Life	Approx. 5 years (Ambient temperature: 25 °C)
Built-in interface	RS-232	1 channel, transmission speed: 115200, 57600, 38400, 19200, 9600, 4800 bps Connector shape: D-sub 9-pin (male)
	RS-422/485	1 channel, transmission speed: 115200, 57600, 38400, 19200, 9600, 4800 bps Connector shape: D-sub 9-pin (female)
	Ethernet	2 channels, data transfer method: 100BASE-TX, 10BASE-T Connector shape: RJ45 (modular jack) AUTO MDI/MDI-X
	USB (Host)	1 channel (rear face)
		USB 2.0 (High-Speed 480 Mbps), Connector shape: USB-A
	USB (Device)	1 channel (front face)
		USB 2.0 (High-Speed 480 Mbps), Connector shape: USB Mini-B
	SD card	1 channel, SDHC compliant (maximum 32 GB)
	Extension interface	—
	Auxiliary extension interface	—
	Wireless LAN communication unit interface	For installing a wireless LAN communication unit
	Sound output interface	1 channel, WAV format (16 bits, 8.000 kHz/16.000 kHz, monoral) Applicable plug: Φ3.5 stereo mini-plug (3-prong)
Buzzer output		Single tone (tone and tone length adjustable)
POWER LED		2 colors (blue and orange)
Protective structure		Front: IP67F [*6][*8] In control panel: IP2X
External dimensions		299 (11.77) (W) × 219 (8.62) (H) × 48 (1.89) (D) mm (inch)
Panel cutting dimensions		290.5 (11.44) (W) × 210.5 (8.29) (H) mm (inch)
Weight (Excluding installation fitting)		1.7 kg (3.7 lb)
Compatible software package		GT Works3 Version1.250L or later

*1 As a characteristic of liquid crystal display panels, bright dots (always lit) and dark dots (never lit) may appear on the panel.
Since liquid crystal display panels comprise a great number of display elements, the appearance of bright and dark dots cannot be reduced to zero.
Individual differences in liquid crystal display panels may cause differences in color, uneven brightness and flickering.
Note that these phenomena are characteristics of liquid crystal display panels and it does not mean the products are defective or damaged.

*2 Flickering may occur due to vibration, shock, or the display colors.

*3 When a stylus is used, the touch panel has a life of 100 thousand touches.
The stylus must satisfy the following specifications.
Material: Polyacetal resin
Tip radius: 0.8 mm or more

*4 To prevent the display section from burning in and lengthen the backlight life, enable the screen save function and turn off the backlight.

*5 If you touch two points or more simultaneously on the touch panel, a switch in an unintended location may operate.
Do not touch two points or more simultaneously on the touch panel.

*6 To conform to IP67F, close the USB environmental protection cover by pushing the USB mark firmly. (The GOT conforms to IP2X when the USB environmental protection cover is open.)
Note that the structure does not guarantee protection in all users' environments. The GOT should not be used in environments where it may be exposed to oil or chemicals for a long period of time, or where oil mist fills the air.

*7 Minimum size of a key that can be arranged.
To ensure safe use of the product, the following settings are recommended.
Key size: 16 × 16 dots or larger
Distance between keys: 16 dots or more

*8 The suffix "F" of IP67F is a symbol that indicates protection rate against oil.
It is described in the Appendix of JIS C 0920 of the Japanese Industrial Standards.

GT2510-WX

Item		Specifications
		GT2510-WXTBD GT2510-WXTSD
Display section [*1*2]	Display device	TFT color LCD
	Screen size	10.1" wide screen
	Resolution	WXGA: 1280 × 800 dots
	Display size	216.96 (8.54) (W) × 135.6 (5.34) (H) mm (inch)
	Number of displayed characters	16-dot standard font: 80 characters × 50 lines (two-byte characters) 12-dot standard font: 106 characters × 66 lines (two-byte characters)
	Display color	65536 colors
	Brightness Adjustment	32 levels
	Backlight	LED (Not replaceable)
	Backlight life [*4]	Approx. 50000 h (Ambient temperature: 25°C, display intensity: 50%)
Touch panel [*3]	Type	Analog resistive film
	Key size	Minimum 2 × 2 dots [*7] (per key)
	Simultaneous press	Not available [*5] (Only 1 point can be touched.)
	Life	1 million touches or more (Operating force: 0.98 N or less)
Human sensor	Detection length	—
	Detection temperature	—
User memory	User memory capacity	Memory for storage (ROM): 32 MB, Memory for operation (RAM): 128 MB
	Life (number of write times)	100000 times
Built-in clock precision		±90 seconds/month (Ambient temperature: 25 °C)
Battery		GT11-50BAT lithium battery
	Life	Approx. 5 years (Ambient temperature: 25 °C)
Built-in interface	RS-232	1 channel, transmission speed: 115200, 57600, 38400, 19200, 9600, 4800 bps Connector shape: D-sub 9-pin (male)
	RS-422/485	1 channel, transmission speed: 115200, 57600, 38400, 19200, 9600, 4800 bps Connector shape: D-sub 9-pin (female)
	Ethernet	2 channels, data transfer method: 100BASE-TX, 10BASE-T Connector shape: RJ45 (modular jack) AUTO MDI/MDI-X
	USB (Host)	1 channel (rear face)
		USB 2.0 (High-Speed 480 Mbps), Connector shape: USB-A
	USB (Device)	1 channel (front face)
		USB 2.0 (High-Speed 480 Mbps), Connector shape: USB Mini-B
	SD card	1 channel, SDHC compliant (maximum 32 GB)
	Extension interface	—
	Auxiliary extension interface	—
	Wireless LAN communication unit interface	For installing a wireless LAN communication unit
	Sound output interface	1 channel, WAV format (16 bits, 8.000 kHz/16.000 kHz, monoral) Applicable plug: Φ3.5 stereo mini-plug (3-prong)
Buzzer output		Single tone (tone and tone length adjustable)
POWER LED		2 colors (blue and orange)
Protective structure		Front: IP67F [*6*8] In control panel: IP2X
External dimensions		252 (9.92) (W) × 194 (7.64) (H) × 48 (1.89) (D) mm (inch)
Panel cutting dimensions		243.5 (9.59) (W) × 185.5 (7.30) (H) mm (inch)
Weight (Excluding installation fitting)		1.2 (2.6) kg (lb)
Compatible software package		GT Works3 Version1.175H or later

*1 As a characteristic of liquid crystal display panels, bright dots (always lit) and dark dots (never lit) may appear on the panel.
Since liquid crystal display panels comprise a great number of display elements, the appearance of bright and dark dots cannot be reduced to zero.
Individual differences in liquid crystal display panels may cause differences in color, uneven brightness and flickering.
Note that these phenomena are characteristics of liquid crystal display panels and it does not mean the products are defective or damaged.

*2 Flickering may occur due to vibration, shock, or the display colors.

*3 When a stylus is used, the touch panel has a life of 100 thousand touches.
The stylus must satisfy the following specifications.
Material: Polyacetal resin
Tip radius: 0.8 mm or more

*4 To prevent the display section from burning in and lengthen the backlight life, enable the screen save function and turn off the backlight.

*5 If you touch two points or more simultaneously on the touch panel, a switch in an unintended location may operate.
Do not touch two points or more simultaneously on the touch panel.

*6 To conform to IP67F, close the USB environmental protection cover by pushing the USB mark firmly. (The GOT conforms to IP2X when the USB environmental protection cover is open.)
Note that the structure does not guarantee protection in all users' environments. The GOT should not be used in environments where it may be exposed to oil or chemicals for a long period of time, or where oil mist fills the air.

*7 Minimum size of a key that can be arranged.
To ensure safe use of the product, the following settings are recommended.
Key size: 16 × 16 dots or larger
Distance between keys: 16 dots or more

*8 The suffix "F" of IP67F is a symbol that indicates protection rate against oil.
It is described in the Appendix of JIS C 0920 of the Japanese Industrial Standards.

GT2507-W

Item		Specifications
		GT2507-WTBD GT2507-WTSD
Display section [*1*2]	Display device	TFT color LCD
	Screen size	7" wide screen
	Resolution	WVGA: 800 × 480 dots
	Display size	152.40 (6.00) (W) × 91.44 (3.60) (H) mm (inch)
	Number of displayed characters	16-dot standard font: 50 characters × 30 rows (Two-byte characters) 12-dot standard font: 66 characters × 40 rows (Two-byte characters)
	Display color	65536 colors
	Brightness Adjustment	32 levels
	Backlight	LED (Not replaceable)
	Backlight life [*4]	Approx. 50000 h (Ambient temperature: 25°C, display intensity: 50%)
Touch panel [*3]	Type	Analog resistive film
	Key size	Minimum 2 × 2 dots [*7] (per key)
	Simultaneous press	Not available [*5] (Only 1 point can be touched.)
	Life	1 million touches or more (Operating force: 0.98 N or less)
Human sensor	Detection length	—
	Detection temperature	—
User memory	User memory capacity	Memory for storage (ROM): 32 MB, Memory for operation (RAM): 128 MB
	Life (number of write times)	100000 times
Built-in clock precision		±90 seconds/month (Ambient temperature: 25 °C)
Battery		GT11-50BAT lithium battery
	Life	Approx. 5 years (Ambient temperature: 25 °C)
Built-in interface	RS-232	1 channel, transmission speed: 115200, 57600, 38400, 19200, 9600, 4800 bps Connector shape: D-sub 9-pin (male)
	RS-422/485	1 channel, transmission speed: 115200, 57600, 38400, 19200, 9600, 4800 bps Connector shape: D-sub 9-pin (female)
	Ethernet	2 channels Data transfer method: 100BASE-TX, 10BASE-T Connector shape: RJ45 (modular jack) AUTO MDI/MDI-X
	USB (Host)	1 channel (rear face)
		USB 2.0 (High-Speed 480 Mbps), Connector shape: USB-A
	USB (Device)	1 channel (front face)
		USB 2.0 (High-Speed 480 Mbps), Connector shape: USB Mini-B
	SD card	1 channel, SDHC compliant (maximum 32 GB)
	Extension interface	—
	Auxiliary extension interface	—
	Wireless LAN communication unit interface	For installing a wireless LAN communication unit
	Sound output interface	1 channel, WAV format (16 bits, 8.000 kHz/16.000 kHz, monoral) Applicable plug: Φ3.5 stereo mini-plug (3-prong)
Buzzer output		Single tone (tone and tone length adjustable)
POWER LED		2 colors (blue and orange)
Protective structure		Front: IP67F [*6*8] In control panel: IP2X
External dimensions		189 (7.44) (W) × 142 (5.59) (H) × 48 (1.89) (D) mm (inch)
Panel cutting dimensions		180.5 (7.11) (W) × 133.5 (5.26) (H) mm (inch)
Weight (excluding a fitting)		0.75 (1.7) kg (lb)
Compatible software package		GT Works3 Version1.175H or later

*1 As a characteristic of liquid crystal display panels, bright dots (always lit) and dark dots (never lit) may appear on the panel.
Since liquid crystal display panels comprise a great number of display elements, the appearance of bright and dark dots cannot be reduced to zero.
Individual differences in liquid crystal display panels may cause differences in color, uneven brightness and flickering.
Note that these phenomena are characteristics of liquid crystal display panels and it does not mean the products are defective or damaged.

*2 Flickering may occur due to vibration, shock, or the display colors.

*3 When a stylus is used, the touch panel has a life of 100 thousand touches.
The stylus must satisfy the following specifications.
Material: Polyacetal resin
Tip radius: 0.8 mm or more

*4 To prevent the display section from burning in and lengthen the backlight life, enable the screen save function and turn off the backlight.

*5 If you touch two points or more simultaneously on the touch panel, a switch in an unintended location may operate.
Do not touch two points or more simultaneously on the touch panel.

*6 To conform to IP67F, close the USB environmental protection cover by pushing the USB mark firmly. (The GOT conforms to IP2X when the USB environmental protection cover is open.)
Note that the structure does not guarantee protection in all users' environments. The GOT should not be used in environments where it may be exposed to oil or chemicals for a long period of time, or where oil mist fills the air.

*7 Minimum size of a key that can be arranged.
To ensure safe use of the product, the following settings are recommended.
Key size: 16 × 16 dots or larger
Distance between keys: 16 dots or more

*8 The suffix "F" of IP67F is a symbol that indicates protection rate against oil.
It is described in the Appendix of JIS C 0920 of the Japanese Industrial Standards.

GT2507T-W

Item		Specifications
		GT2507T-WTSD
Display section *1*2	Display device	TFT color LCD
	Screen size	7" wide screen
	Resolution	WVGA: 800 × 480 dots
	Display size	152.40 (6.00) (W) × 91.44 (3.60) (H) mm (inch)
	Number of displayed characters	16-dot standard font: 50 characters × 30 rows (Two-byte characters) 12-dot standard font: 66 characters × 40 rows (Two-byte characters)
	Display color	65536 colors
	Brightness Adjustment	32 levels
	Backlight	LED (Not replaceable)
	Backlight life *4	Approx. 50000 h (Ambient temperature: 25°C, display intensity: 50%)
Touch panel *3	Type	Analog resistive film
	Key size	Minimum 2 × 2 dots *6 (per key)
	Simultaneous press	Not available *5 (Only 1 point can be touched.)
	Life	1 million touches or more (Operating force: 0.98 N or less)
Human sensor	Detection length	—
	Detection temperature	—
User memory	User memory capacity	Memory for storage (ROM): 32 MB, Memory for operation (RAM): 128 MB
	Life (number of write times)	100000 times
Built-in clock precision		±90 seconds/month (Ambient temperature: 25 °C)
Battery		GT11-50BAT lithium battery
	Life	Approx. 5 years (Ambient temperature: 25 °C)
Built-in interface	RS-232	1 channel, transmission speed: 115200, 57600, 38400, 19200, 9600, 4800 bps Connector shape: D-sub 9-pin (male)
	RS-422/485	1 channel, transmission speed: 115200, 57600, 38400, 19200, 9600, 4800 bps Connector shape: D-sub 9-pin (female)
	Ethernet	2 channels Data transfer method: 100BASE-TX, 10BASE-T Connector shape: RJ45 (modular jack) AUTO MDI/MDI-X
	USB (Host)	1 channel (rear face)
		USB 2.0 (High-Speed 480 Mbps), Connector shape: USB-A
	USB (Device)	1 channel (rear face)
		USB 2.0 (High-Speed 480 Mbps), Connector shape: USB Mini-B
	SD card	1 channel, SDHC compliant (maximum 32 GB)
	Extension interface	—
	Auxiliary extension interface	—
	Wireless LAN communication unit interface	For installing a wireless LAN communication unit
	Sound output interface	1 channel, WAV format (16 bits, 8.000 kHz/16.000 kHz, monoral) Applicable plug: Φ3.5 stereo mini-plug (3-prong)
Buzzer output		Single tone (tone and tone length adjustable)
POWER LED		2 colors (blue and orange)
UV cutoff		Front: Approximately 95% (370 nm)
Protective structure		Front: IP66F *7/IP67F *7 In control panel: IP2X
External dimensions		214 (8.43) (W) × 158 (6.22) (H) × 55 (2.17) (D) mm (inch)
Panel cutting dimensions		197 (7.76) (W) × 141 (5.55) (H) mm (inch)
Weight (excluding a fitting)		1.2 (2.6) kg (lb)
Compatible software package		GT Works3 Version1.195D or later

*1 As a characteristic of liquid crystal display panels, bright dots (always lit) and dark dots (never lit) may appear on the panel.
Since liquid crystal display panels comprise a great number of display elements, the appearance of bright and dark dots cannot be reduced to zero.
Individual differences in liquid crystal display panels may cause differences in color, uneven brightness and flickering.
Note that these phenomena are characteristics of liquid crystal display panels and it does not mean the products are defective or damaged.

*2 Flickering may occur due to vibration, shock, or the display colors.

*3 When a stylus is used, the touch panel has a life of 100 thousand touches.
The stylus must satisfy the following specifications.
Material: Polyacetal resin
Tip radius: 0.8 mm or more

*4 To prevent the display section from burning in and lengthen the backlight life, enable the screen save function and turn off the backlight.

*5 If you touch two points or more simultaneously on the touch panel, a switch in an unintended location may operate.
Do not touch two points or more simultaneously on the touch panel.

*6 Minimum size of a key that can be arranged.
To ensure safe use of the product, the following settings are recommended.
Key size: 16 × 16 dots or larger
Distance between keys: 16 dots or more

*7 The suffix "F" of IP66F and IP67F is a symbol that indicates protection rate against oil.
It is described in the Appendix of JIS C 0920 of the Japanese Industrial Standards.

GT2512-S, GT2512F-S

Item		Specifications	
		GT2512-STBA GT2512-STBD	GT2512F-STNA GT2512F-STND
Display section [*1*2]	Display device	TFT color LCD	
	Screen size	12.1”	
	Resolution	SVGA: 800 × 600 dots	
	Display size	246 (9.69) (W) × 184.5 (7.26) (H) mm (inch)	
	Number of displayed characters	16-dot standard font: 50 characters × 37 lines (two-byte characters) 12-dot standard font: 66 characters × 50 lines (two-byte characters)	
	Display color	65536 colors	
	Brightness Adjustment	32 levels	
	Backlight	LED (Not replaceable)	
	Backlight life [*4]	Approx. 60000 h (Ambient temperature: 25°C, display intensity: 50%)	
Touch panel [*3]	Type	Analog resistive film	
	Key size	Minimum 2 × 2 dots [*8] (per key)	
	Simultaneous press	Not available [*5] (Only 1 point can be touched.)	
	Life	1 million touches or more (Operating force: 0.98 N or less)	
Human sensor	Detection length	—	
	Detection temperature	—	
User memory	User memory capacity	Memory for storage (ROM): 32 MB, Memory for operation (RAM): 80 MB	
	Life (number of write times)	100000 times	
Built-in clock precision		±90 seconds/month (Ambient temperature: 25 °C)	
Battery		GT11-50BAT lithium battery	
	Life	Approx. 5 years (Ambient temperature: 25 °C)	
Built-in interface	RS-232	1 channel, transmission speed: 115200, 57600, 38400, 19200, 9600, 4800 bps Connector shape: D-sub 9-pin (male)	
	RS-422/485	1 channel, transmission speed: 115200, 57600, 38400, 19200, 9600, 4800 bps Connector shape: D-sub 9-pin (female)	
	Ethernet	1 channel Data transfer method: 100BASE-TX, 10BASE-T Connector shape: RJ45 (modular jack) AUTO MDI/MDI-X	
	USB (Host)	2 channels (front face and rear face)	1 channel (rear face)
		USB 2.0 (High-Speed 480 Mbps), Connector shape: USB-A	
	USB (Device)	1 channel (front face)	1 channel (rear face)
		USB 2.0 (High-Speed 480 Mbps), Connector shape: USB Mini-B	
	SD card	1 channel, SDHC compliant (maximum 32 GB)	
	Extension interface	For installing a communication unit or an option unit	
	Auxiliary extension interface	—	
	Side interface	For installing a communication unit	
Buzzer output		Single tone (tone and tone length adjustable)	
POWER LED		2 colors (blue and orange)	
Protective structure		Front: IP67F [*6*9] In control panel: IP2X	Front: IP67F [*7*9] In control panel: IP2X
External dimensions		316 (12.44) (W) × 246 (9.69) (H) × 52 (2.05) (D) mm (inch)	311 (12.24) (W) × 237 (9.33) (H) × 54 (2.13) (D) mm (inch)
Panel cutting dimensions		302 (11.89) (W) × 228 (8.98) (H) mm (inch)	269 (10.59) (W) × 214 (8.43) (H) mm (inch)
Weight (Excluding installation fitting)		2.4 (5.3) kg (lb)	2.4 (5.3) kg (lb)
Compatible software package		GT Works3 Version1.122C or later	GT Works3 Version1.150G or later

*1 As a characteristic of liquid crystal display panels, bright dots (always lit) and dark dots (never lit) may appear on the panel.
Since liquid crystal display panels comprise a great number of display elements, the appearance of bright and dark dots cannot be reduced to zero.
Individual differences in liquid crystal display panels may cause differences in color, uneven brightness and flickering.
Note that these phenomena are characteristics of liquid crystal display panels and it does not mean the products are defective or damaged.

*2 Flickering may occur due to vibration, shock, or the display colors.

*3 When a stylus is used, the touch panel has a life of 100 thousand touches.
The stylus must satisfy the following specifications.
Material: Polyacetal resin
Tip radius: 0.8 mm or more

*4 To prevent the display section from burning in and lengthen the backlight life, enable the screen save function and turn off the backlight.

*5 If you touch two points or more simultaneously on the touch panel, a switch in an unintended location may operate.
Do not touch two points or more simultaneously on the touch panel.

*6 To conform to IP67F, close the USB environmental protection cover by pushing the [PUSH] mark firmly. (The GOT conforms to IP2X when the USB environmental protection cover is open.)
Note that the structure does not guarantee protection in all users' environments. The GOT should not be used in environments where it may be exposed to oil or chemicals for a long period of time, or where oil mist fills the air.

*7 To conform to IP67F, attach the environmental protection sheet.
Note that the structure does not guarantee protection in all users' environments. The GOT should not be used in environments where it may be exposed to oil or chemicals for a long period of time, or where oil mist fills the air.

*8 Minimum size of a key that can be arranged.
To ensure safe use of the product, the following settings are recommended.
Key size: 16 × 16 dots or larger
Distance between keys: 16 dots or more

*9 The suffix "F" of IP67F is a symbol that indicates protection rate against oil.
It is described in the Appendix of JIS C 0920 of the Japanese Industrial Standards.

GT2510-V, GT2510F-V

Item		Specifications		
		GT2510-VTBA GT2510-VTBD	GT2510-VTWA GT2510-VTWD	GT2510F-VTNA GT2510F-VTND
Display section *1*2	Display device	TFT color LCD		
	Screen size	10.4”		
	Resolution	VGA: 640 × 480 dots		
	Display size	211.2 (8.31) (W) × 158.4 (6.24) (H) mm (inch)		
	Number of displayed characters	16-dot standard font: 40 characters × 30 lines (two-byte characters) 12-dot standard font: 53 characters × 40 lines (two-byte characters)		
	Display color	65536 colors		
	Brightness Adjustment	32 levels		
	Backlight	LED (Not replaceable)		
	Backlight life *4	Approx. 60000 h (Ambient temperature: 25°C, display intensity: 50%)		
Touch panel *3	Type	Analog resistive film		
	Key size	Minimum 2 × 2 dots *8 (per key)		
	Simultaneous press	Not available *5 (Only 1 point can be touched.)		
	Life	1 million touches or more (Operating force: 0.98 N or less)		
Human sensor	Detection length	—		
	Detection temperature	—		
User memory	User memory capacity	Memory for storage (ROM): 32 MB, Memory for operation (RAM): 80 MB		
	Life (number of write times)	100000 times		
Built-in clock precision		±90 seconds/month (Ambient temperature: 25 °C)		
Battery		GT11-50BAT lithium battery		
	Life	Approx. 5 years (Ambient temperature: 25 °C)		
Built-in interface	RS-232	1 channel, transmission speed: 115200, 57600, 38400, 19200, 9600, 4800 bps Connector shape: D-sub 9-pin (male)		
	RS-422/485	1 channel, transmission speed: 115200, 57600, 38400, 19200, 9600, 4800 bps Connector shape: D-sub 9-pin (female)		
	Ethernet	1 channel Data transfer method: 100BASE-TX, 10BASE-T Connector shape: RJ45 (modular jack) AUTO MDI/MDI-X		
	USB (Host)	2 channels (front face and rear face)	1 channel (rear face)	
		USB 2.0 (High-Speed 480 Mbps), Connector shape: USB-A		
	USB (Device)	1 channel (front face)	1 channel (rear face)	
		USB 2.0 (High-Speed 480 Mbps), Connector shape: USB Mini-B		
	SD card	1 channel, SDHC compliant (maximum 32 GB)		
	Extension interface	For installing a communication unit or an option unit		
	Auxiliary extension interface	—		
	Side interface	For installing a communication unit		
Buzzer output		Single tone (tone and tone length adjustable)		
POWER LED		2 colors (blue and orange)		
Protective structure		Front: IP67F *6*9 In control panel: IP2X		Front: IP67F *7*9 In control panel: IP2X
External dimensions		303 (11.93) (W) × 218 (8.58) (H) × 52 (2.05) (D) mm (inch)		298 (11.73) (W) × 209 (8.23) (H) × 54 (2.13) (D) mm (inch)
Panel cutting dimensions		289 (11.38) (W) × 200 (7.87) (H) mm (inch)		234 (9.21) (W) × 187 (7.36) (H) mm (inch)
Weight (excluding a fitting)		2.1 (4.6) kg (lb)		2.1 (4.6) kg (lb)
Compatible software package		GT Works3 Version1.112S or later		GT Works3 Version1.150G or later

*1 As a characteristic of liquid crystal display panels, bright dots (always lit) and dark dots (never lit) may appear on the panel.
Since liquid crystal display panels comprise a great number of display elements, the appearance of bright and dark dots cannot be reduced to zero.
Individual differences in liquid crystal display panels may cause differences in color, uneven brightness and flickering.
Note that these phenomena are characteristics of liquid crystal display panels and it does not mean the products are defective or damaged.

*2 Flickering may occur due to vibration, shock, or the display colors.

*3 When a stylus is used, the touch panel has a life of 100 thousand touches.
The stylus must satisfy the following specifications.
Material: Polyacetal resin
Tip radius: 0.8 mm or more

*4 To prevent the display section from burning in and lengthen the backlight life, enable the screen save function and turn off the backlight.

*5 If you touch two points or more simultaneously on the touch panel, a switch in an unintended location may operate.
Do not touch two points or more simultaneously on the touch panel.

*6 To conform to IP67F, close the USB environmental protection cover by pushing the [PUSH] mark firmly. (The GOT conforms to IP2X when the USB environmental protection cover is open.)
Note that the structure does not guarantee protection in all users' environments. The GOT should not be used in environments where it may be exposed to oil or chemicals for a long period of time, or where oil mist fills the air.

*7 To conform to IP67F, attach the environmental protection sheet.
Note that the structure does not guarantee protection in all users' environments. The GOT should not be used in environments where it may be exposed to oil or chemicals for a long period of time, or where oil mist fills the air.

*8 Minimum size of a key that can be arranged.
To ensure safe use of the product, the following settings are recommended.
Key size: 16 × 16 dots or larger
Distance between keys: 16 dots or more

*9 The suffix "F" of IP67F is a symbol that indicates protection rate against oil.
It is described in the Appendix of JIS C 0920 of the Japanese Industrial Standards.

GT2508-V, GT2508F-V

Item		Specifications		
		GT2508-VTBA GT2508-VTBD	GT2508-VTWA GT2508-VTWD	GT2508F-VTNA GT2508F-VTND
Display section [*1*2]	Display device	TFT color LCD		
	Screen size	8.4"		
	Resolution	VGA: 640 × 480 dots		
	Display size	170.9 (6.73) (W) × 128.2 (5.05) (H) mm (inch)		
	Number of displayed characters	16-dot standard font: 40 characters × 30 lines (two-byte characters) 12-dot standard font: 53 characters × 40 lines (two-byte characters)		
	Display color	65536 colors		
	Brightness Adjustment	32 levels		
	Backlight	LED (Not replaceable)		
	Backlight life [*4]	Approx. 60000 h (Ambient temperature: 25°C, display intensity: 50%)		
Touch panel [*3]	Type	Analog resistive film		
	Key size	Minimum 2 × 2 dots [*8] (per key)		
	Simultaneous press	Not available [*5] (Only 1 point can be touched.)		
	Life	1 million touches or more (Operating force: 0.98 N or less)		
Human sensor	Detection length	—		
	Detection temperature	—		
User memory	User memory capacity	Memory for storage (ROM): 32 MB, Memory for operation (RAM): 80 MB		
	Life (number of write times)	100000 times		
Built-in clock precision		±90 seconds/month (Ambient temperature: 25 °C)		
Battery		GT11-50BAT lithium battery		
	Life	Approx. 5 years (Ambient temperature: 25 °C)		
Built-in interface	RS-232	1 channel, transmission speed: 115200, 57600, 38400, 19200, 9600, 4800 bps Connector shape: D-sub 9-pin (male)		
	RS-422/485	1 channel, transmission speed: 115200, 57600, 38400, 19200, 9600, 4800 bps Connector shape: D-sub 9-pin (female)		
	Ethernet	1 channel Data transfer method: 100BASE-TX, 10BASE-T Connector shape: RJ45 (modular jack) AUTO MDI/MDI-X		
	USB (Host)	2 channels (front face and rear face)	1 channel (rear face)	
		USB 2.0 (High-Speed 480 Mbps), Connector shape: USB-A		
	USB (Device)	1 channel (front face)	1 channel (rear face)	
		USB 2.0 (High-Speed 480 Mbps), Connector shape: USB Mini-B		
	SD card	1 channel, SDHC compliant (maximum 32 GB)		
	Extension interface	For installing a communication unit or an option unit		
	Auxiliary extension interface	—		
	Side interface	For installing a communication unit		
Buzzer output		Single tone (tone and tone length adjustable)		
POWER LED		2 colors (blue and orange)		
Protective structure		Front: IP67F [*6*9] In control panel: IP2X		Front: IP67F [*7*9] In control panel: IP2X
External dimensions		241 (9.49) (W) × 194 (7.64) (H) × 52 (2.05) (D) mm (inch)		236 (9.29) (W) × 185 (7.28) (H) × 54 (2.13) (D) mm (inch)
Panel cutting dimensions		227 (8.94) (W) × 176 (6.93) (H) mm (inch)		194 (7.64) (W) × 158 (6.22) (H) mm (inch)
Weight (excluding a fitting)		1.5 (3.3) kg (lb)		1.5 (3.3) kg (lb)
Compatible software package		GT Works3 Version1.112S or later		GT Works3 Version1.150G or later

*1 As a characteristic of liquid crystal display panels, bright dots (always lit) and dark dots (never lit) may appear on the panel.
Since liquid crystal display panels comprise a great number of display elements, the appearance of bright and dark dots cannot be reduced to zero.
Individual differences in liquid crystal display panels may cause differences in color, uneven brightness and flickering.
Note that these phenomena are characteristics of liquid crystal display panels and it does not mean the products are defective or damaged.

*2 Flickering may occur due to vibration, shock, or the display colors.

*3 When a stylus is used, the touch panel has a life of 100 thousand touches.
The stylus must satisfy the following specifications.
Material: Polyacetal resin
Tip radius: 0.8 mm or more

*4 To prevent the display section from burning in and lengthen the backlight life, enable the screen save function and turn off the backlight.

*5 If you touch two points or more simultaneously on the touch panel, a switch in an unintended location may operate.
Do not touch two points or more simultaneously on the touch panel.

*6 To conform to IP67F, close the USB environmental protection cover by pushing the [PUSH] mark firmly. (The GOT conforms to IP2X when the USB environmental protection cover is open.)
Note that the structure does not guarantee protection in all users' environments. The GOT should not be used in environments where it may be exposed to oil or chemicals for a long period of time, or where oil mist fills the air.

*7 To conform to IP67F, attach the environmental protection sheet.
Note that the structure does not guarantee protection in all users' environments. The GOT should not be used in environments where it may be exposed to oil or chemicals for a long period of time, or where oil mist fills the air.

*8 Minimum size of a key that can be arranged.
To ensure safe use of the product, the following settings are recommended.
Key size: 16 × 16 dots or larger
Distance between keys: 16 dots or more

*9 The suffix "F" of IP67F is a symbol that indicates protection rate against oil.
It is described in the Appendix of JIS C 0920 of the Japanese Industrial Standards.

GT2505-V

Item		Specifications
		GT2505-VTBD
Display section [*1*2]	Display device	TFT color LCD
	Screen size	5.7”
	Resolution	VGA: 640 × 480 dots
	Display size	115.2 (4.54) (W) × 86.4 (3.40) (H) mm (inch)
	Number of displayed characters	16-dot standard font: 40 characters × 30 lines (two-byte characters) 12-dot standard font: 53 characters × 40 lines (two-byte characters)
	Display color	65536 colors
	Brightness Adjustment	32 levels
	Backlight	LED (Not replaceable)
	Backlight life [*4]	Approx. 60000 h (Ambient temperature: 25°C, display intensity: 50%)
Touch panel [*3]	Type	Analog resistive film
	Key size	Minimum 2 × 2 dots [*8] (per key)
	Simultaneous press	Not available [*5] (Only 1 point can be touched.)
	Life	1 million touches or more (Operating force: 0.98 N or less)
Human sensor	Detection length	—
	Detection temperature	—
User memory	User memory capacity	Memory for storage (ROM): 32 MB, Memory for operation (RAM): 80 MB
	Life (number of write times)	100000 times
Built-in clock precision		±90 seconds/month (Ambient temperature: 25 °C)
Battery		GT11-50BAT lithium battery
	Life	Approx. 5 years (Ambient temperature: 25 °C)
Built-in interface	RS-232	1 channel, transmission speed: 115200, 57600, 38400, 19200, 9600, 4800 bps Connector shape: D-sub 9-pin (male)
	RS-422/485	1 channel, transmission speed: 115200, 57600, 38400, 19200, 9600, 4800 bps Terminating resistor: 330 Ω, 100 Ω, OPEN (Selectable by the terminating resistor setting switch. Factory default: 330 Ω) [*7] Connector shape: D-sub 9-pin (female)
	Ethernet	1 channel Data transfer method: 100BASE-TX, 10BASE-T Connector shape: RJ45 (modular jack) AUTO MDI/MDI-X
	USB (Host)	1 channel (rear face)
		USB 2.0 (High-Speed 480 Mbps), Connector shape: USB-A
	USB (Device)	1 channel (front face)
		USB 2.0 (High-Speed 480 Mbps), Connector shape: USB Mini-B
	SD card	1 channel, SDHC compliant (maximum 32 GB)
	Extension interface	—
	Auxiliary extension interface	—
	Side interface	—
Buzzer output		Single tone (tone and tone length adjustable)
POWER LED		2 colors (blue and orange)
Protective structure		Front: IP67F [*6*9] In control panel: IP2X
External dimensions		164 (6.46) (W) × 139 (5.47) (H) × 53.5 (2.11) (D) mm (inch)
Panel cutting dimensions		153 (6.02) (W) × 121 (4.76) (H) mm (inch)
Weight (excluding a fitting)		0.6 (1.3) kg (lb)
Compatible software package		GT Works3 Version1.180N or later

*1 As a characteristic of liquid crystal display panels, bright dots (always lit) and dark dots (never lit) may appear on the panel.
Since liquid crystal display panels comprise a great number of display elements, the appearance of bright and dark dots cannot be reduced to zero.
Individual differences in liquid crystal display panels may cause differences in color, uneven brightness and flickering.
Note that these phenomena are characteristics of liquid crystal display panels and it does not mean the products are defective or damaged.

*2 Flickering may occur due to vibration, shock, or the display colors.

*3 When a stylus is used, the touch panel has a life of 100 thousand touches.
The stylus must satisfy the following specifications.
Material: Polyacetal resin
Tip radius: 0.8 mm or more

*4 To prevent the display section from burning in and lengthen the backlight life, enable the screen save function and turn off the backlight.

*5 If you touch two points or more simultaneously on the touch panel, a switch in an unintended location may operate.
Do not touch two points or more simultaneously on the touch panel.

*6 To conform to IP67F, close the USB environmental protection cover by pushing the USB mark firmly.
(The GOT conforms to IP2X when the USB environmental protection cover is open.)
Note that the structure does not guarantee protection in all users' environments.
The GOT may not be used in an environment where the GOT is exposed to oil or chemicals for a long time, or where oil mist fills the air.

*7 For the GOT multi-drop connection, set the terminating resistor setting switch of the GOT according to the connection type.
For details on the GOT multi-drop connection, refer to the following.
GOT2000 Series Connection Manual (Mitsubishi Electric Products) For GT Works3 Version1

*8 The minimum size of a key that can be arranged.
To ensure safe use of the product, the following settings are recommended.
Key size: 16 × 16 dots or larger
Distance between keys: 16 dots or more

*9 The suffix "F" of IP67F is a symbol that indicates protection rate against oil.
It is described in the Appendix of JIS C 0920 of the Japanese Industrial Standards.

GT25HS-V

GT2506HS-V

Item		Specifications
		GT2506HS-VTBD
Display section *1*2	Display device	TFT color LCD
	Screen size	6.5”
	Resolution	VGA: 640 × 480 dots
	Display size	132.5 (6.02) (W) × 99.4 (4.76) (H) mm (inch)
	Number of displayed characters	16-dot standard font: 40 characters × 30 lines (two-byte characters) 12-dot standard font: 53 characters × 40 lines (two-byte characters)
	Display color	65536 colors
	Brightness Adjustment	32 levels
	Backlight	LED (Not replaceable)
	Backlight life *4	Approx. 40000 h (Ambient temperature: 25°C, display intensity: 50%)
Touch panel *3	Type	Analog resistive film
	Key size	Minimum 2 × 2 dots *7 (per key)
	Simultaneous press	Not available *5 (Only 1 point can be touched.)
	Life	1 million touches or more (Operating force: 0.98 N or less)
Switch	Operation switch	6 switches (6 contacts/common) N/O contact, Maximum rating 10 mA/24 V DC, Life: 1000000 times
	Grip switch	1 switch (single wiring) (IDEC HE3B-M2PB) Enable switch (deadman switch) 3-position system of OFF ← → ON → OFF *10 2 N/O contacts Maximum rating 1 A/24 V DC (resistance load), Maximum rating 0.3 A/24 V DC (induction load), Life: 100000 times
	Emergency stop switch	1 switch (single wiring) (IDEC XA1E-BV303R) 3 N/C contacts Maximum rating 1 A/24 V DC (resistance load), Maximum rating 0.3 A/24 V DC (induction load), Life: 100000 times
	Keylock switch (2-position switch)	1 switch (single wiring) (IDEC AS6M-2KT1PB) 2-notch type (Manual stop at each position/A key can be inserted and removed on only the left side./On the right side, a key cannot be removed./Two keys are provided.) 2-position, Maximum rating 1 A/24 V DC (resistance load), Maximum rating 0.3 A/24 V DC (induction load), Life: 100000 times
Human sensor	Detection length	—
	Detection temperature	—
User memory	User memory capacity	Memory for storage (ROM): 32 MB, Memory for operation (RAM): 80 MB
	Life (Number of writings)	100000 times
Built-in clock precision		±90 seconds/month (Ambient temperature: 25 °C)
Battery		GT15-BAT lithium battery
	Life	Approx. 5 years (Ambient temperature: 25 °C)
Built-in interface	RS-232 *9	1 channel, transmission speed: 115200, 57600, 38400, 19200, 9600, 4800 bps Connector shape: Square 42 pins (male)
	RS-422/485 *9	1 channel, transmission speed: 115200, 57600, 38400, 19200, 9600, 4800 bps Connector shape: Square 42 pins (male)
	Ethernet	1 channel Data transfer method: 100BASE-TX, 10BASE-T Connector shape: Square 42 pins (male)
	USB (Host)	1 channel (Top face)
		USB 2.0 (High-Speed 480 Mbps), Connector shape: USB-A
	USB (Device)	1 channel (Top face)
		USB 2.0 (High-Speed 480 Mbps), Connector shape: USB Mini-B
	SD card	1 channel, SDHC compliant (maximum 32 GB)
Buzzer output		Single tone (tone and tone length adjustable)
POWER LED		2 colors (blue and orange)

Item	Specifications
	GT2506HS-VTBD
Protective structure	IP65F *6*8 (When an external cable is connected, the rating is not applied to the relay connector side of the external cable.)
External dimensions	201 (7.91) (W) × 230 (9.06) (H) × 97 (3.82) (D) mm (inch) (Excluding projections such as the emergency stop switch)
Weight (excluding a fitting)	1.2 (2.6) kg (lb) (GOT main unit only)
Compatible software package	GT Works3 Version1.170C or later

*1 As a characteristic of liquid crystal display panels, bright dots (always lit) and dark dots (never lit) may appear on the panel.
Since liquid crystal display panels comprise a great number of display elements, the appearance of bright and dark dots cannot be reduced to zero.
Individual differences in liquid crystal display panels may cause differences in color, uneven brightness and flickering.
Note that these phenomena are characteristics of liquid crystal display panels and it does not mean the products are defective or damaged.

*2 Flickering may occur due to vibration, shock, or the display colors.

*3 When a stylus is used, the touch panel has a life of 100 thousand touches.
The stylus must satisfy the following specifications.
Material: Polyacetal resin
Tip radius: 0.8 mm or more

*4 To prevent the display section from burning in and lengthen the backlight life, enable the screen save function and turn off the backlight.

*5 If you touch two points or more simultaneously on the touch panel, a switch in an unintended location may operate.
Do not touch two points or more simultaneously on the touch panel.

*6 Note that the structure does not guarantee protection in all users' environments.
The rating is not applied when the interface environment protection cover or the environmental protection back cover is removed.
The GOT may not be used in an environment where the GOT is exposed to oil or chemicals for a long time, or where oil mist fills the air.

*7 The minimum size of a key that can be arranged.
To ensure safe use of the product, the following settings are recommended.
Key size: 16 × 16 dots or larger
Distance between keys: 16 dots or more

*8 The suffix "F" of IP65F is a symbol that indicates protection rate against oil.
It is described in the Appendix of JIS C 0920 of the Japanese Industrial Standards.

*9 Select RS-422/485 or RS-232.
Factory default: RS-422/485

*10 For details of the grip switch operation, refer to the following.
☞ Page 357 Grip switch

GT2505HS-V

Item		Specifications
		GT2505HS-VTBD
Display section [*1*2]	Display device	TFT color LCD
	Screen size	5.7”
	Resolution	VGA: 640 × 480 dots
	Display size	115.2 (4.54) (W) × 86.4 (3.40) (H) mm (inch)
	Number of displayed characters	16-dot standard font: 40 characters × 30 lines (two-byte characters) 12-dot standard font: 53 characters × 40 lines (two-byte characters)
	Display color	65536 colors
	Brightness Adjustment	32 levels
	Backlight	LED (Not replaceable)
	Backlight life [*4]	Approx. 60000 h (Ambient temperature: 25°C, display intensity: 50%)
Touch panel [*3]	Type	Analog resistive film
	Key size	Minimum 2 × 2 dots [*7] (per key)
	Simultaneous press	Not available [*5] (Only 1 point can be touched.)
	Life	1 million touches or more (Operating force: 0.98 N or less)
Switch	Operation switch	6 switches (6 contacts/common) N/O contact, Maximum rating 10 mA/24 V DC, Life: 1000000 times
	Grip switch	1 switch (single wiring) (IDEC HE3B-M2PB) Enable switch (deadman switch) 3-position system of OFF ← → ON → OFF [*10] 2 N/O contacts Maximum rating 1 A/24 V DC (resistance load), Maximum rating 0.3 A/24 V DC (induction load), Life: 100000 times
	Emergency stop switch	1 switch (single wiring) (IDEC XA1E-BV303R) 3 N/C contacts Maximum rating 1 A/24 V DC (resistance load), Maximum rating 0.3 A/24 V DC (induction load), Life: 100000 times
	Keylock switch (2-position switch)	1 switch (single wiring) (IDEC AS6M-2KT1PB) 2-notch type (Manual stop at each position/A key can be inserted and removed on only the left side./On the right side, a key cannot be removed./Two keys are provided.) 2-position, Maximum rating 1 A/24 V DC (resistance load), Maximum rating 0.3 A/24 V DC (induction load), Life: 100000 times
Human sensor	Detection length	—
	Detection temperature	—
User memory	User memory capacity	Memory for storage (ROM): 32 MB, Memory for operation (RAM): 80 MB
	Life (Number of writings)	100000 times
Built-in clock precision		±90 seconds/month (Ambient temperature: 25 °C)
Battery		GT11-50BAT lithium battery
	Life	Approx. 5 years (Ambient temperature: 25 °C)
Built-in interface	RS-232 [*9]	1 channel, transmission speed: 115200, 57600, 38400, 19200, 9600, 4800 bps Connector shape: Round 32 pins (male)
	RS-422 [*9]	1 channel, transmission speed: 115200, 57600, 38400, 19200, 9600, 4800 bps Connector shape: Round 32 pins (male)
	Ethernet [*9]	1 channel Data transfer method: 100BASE-TX, 10BASE-T Connector shape: Round 32 pins (male)
	USB (Host)	1 channel (Top face)
		USB 2.0 (High-Speed 480 Mbps), Connector shape: USB-A
	USB (Device)	1 channel (Top face)
		USB 2.0 (High-Speed 480 Mbps), Connector shape: USB Mini-B
	SD card	1 channel, SDHC compliant (maximum 32 GB)
Buzzer output		Single tone (tone and tone length adjustable)
POWER LED		2 colors (blue and orange)
Protective structure		IP65F [*6*8] (When an external cable is connected, the rating is not applied to the relay connector side of the external cable.)

Item	Specifications
	GT2505HS-VTBD
External dimensions	145 (5.71) (W) × 185 (7.28) (H) × 79.3 (3.12) (D) mm (inch) (Excluding projections such as the emergency stop switch)
Weight (excluding a fitting)	0.79 (1.7) kg (lb) (GOT main unit only)
Compatible software package	GT Works3 Version1.195D or later

*1 As a characteristic of liquid crystal display panels, bright dots (always lit) and dark dots (never lit) may appear on the panel.
Since liquid crystal display panels comprise a great number of display elements, the appearance of bright and dark dots cannot be reduced to zero.
Individual differences in liquid crystal display panels may cause differences in color, uneven brightness and flickering.
Note that these phenomena are characteristics of liquid crystal display panels and it does not mean the products are defective or damaged.

*2 Flickering may occur due to vibration, shock, or the display colors.

*3 When a stylus is used, the touch panel has a life of 100 thousand touches.
The stylus must satisfy the following specifications.
Material: Polyacetal resin
Tip radius: 0.8 mm or more

*4 To prevent the display section from burning in and lengthen the backlight life, enable the screen save function and turn off the backlight.

*5 If you touch two points or more simultaneously on the touch panel, a switch in an unintended location may operate.
Do not touch two points or more simultaneously on the touch panel.

*6 Note that the structure does not guarantee protection in all users' environments.
The rating is not applied when the interface environment protection cover or the environmental protection back cover is removed.
The GOT may not be used in an environment where the GOT is exposed to oil or chemicals for a long time, or where oil mist fills the air.

*7 The minimum size of a key that can be arranged.
To ensure safe use of the product, the following settings are recommended.
Key size: 16 × 16 dots or larger
Distance between keys: 16 dots or more

*8 The suffix "F" of IP65F is a symbol that indicates protection rate against oil.
It is described in the Appendix of JIS C 0920 of the Japanese Industrial Standards.

*9 Select one channel, RS-422, RS-232, or Ethernet.
Ethernet interface is set at factory default.

*10 For details of the grip switch operation, refer to the following.
☞ Page 357 Grip switch

GT23

GT2310-V

Item		Specifications
		GT2310-VTBA GT2310-VTBD
Display section [*1][*2]	Display device	TFT color LCD
	Screen size	10.4”
	Resolution	VGA: 640 × 480 dots
	Display size	211.2 (8.31) (W) × 158.4 (6.24) (H) mm (inch)
	Number of displayed characters	16-dot standard font: 40 characters × 30 lines (two-byte characters) 12-dot standard font: 53 characters × 40 lines (two-byte characters)
	Display color	65536 colors
	Brightness Adjustment	16 levels
	Backlight	LED (Not replaceable)
	Backlight life [*4]	Approx. 50000 h (Ambient temperature: 25°C, display intensity: 50%)
Touch panel [*3]	Type	Analog resistive film
	Key size	Minimum 2 × 2 dots [*7] (per key)
	Simultaneous press	Not available [*5] (Only 1 point can be touched.)
	Life	1 million touches or more (Operating force: 0.98 N or less)
User memory	User memory capacity	Memory for storage (ROM): 9MB, Memory for operation (RAM): 9MB
	Life (Number of writings)	100000 times
Built-in clock precision		±90 seconds/month (Ambient temperature: 25 °C)
Battery		GT11-50BAT lithium battery (option)
	Life	Approx. 5 years (Ambient temperature: 25 °C)
Built-in interface	RS-232	1 channel, transmission speed: 115200, 57600, 38400, 19200, 9600, 4800 bps Connector shape: D-sub 9-pin (male)
	RS-422/485	1 channel, transmission speed: 115200, 57600, 38400, 19200, 9600, 4800 bps Connector shape: D-sub 9-pin (female)
	Ethernet	1 channel Data transfer method: 100BASE-TX, 10BASE-T Connector shape: RJ45 (modular jack) AUTO MDI/MDI-X
	USB (Host)	1 channel (rear face)
		USB1.1 (Full-Speed 12 Mbps), Connector shape: USB-A
	USB (Device)	1 channel (rear face)
		USB1.1 (Full-Speed 12 Mbps), Connector shape: USB Mini-B
	SD card	1 channel, SDHC compliant (maximum 32 GB)
Buzzer output		Single tone (Tone length adjustable)
POWER LED		2 colors (blue and orange)
Protective structure		Front: IP67F [*6][*8]
External dimensions		303 (11.93) (W) × 218 (8.58) (H) × 56 (2.20) (D) mm (inch)
Panel cutting dimensions		289 (11.38) (W) × 200 (7.87) (H) mm (inch)
Weight (excluding a fitting)		1.9 (4.2) kg (lb)
Compatible software package		GT Works3 Version1.100E or later

*1 As a characteristic of liquid crystal display panels, bright dots (always lit) and dark dots (never lit) may appear on the panel.
Since liquid crystal display panels comprise a great number of display elements, the appearance of bright and dark dots cannot be reduced to zero.
Individual differences in liquid crystal display panels may cause differences in color, uneven brightness and flickering.
Note that these phenomena are characteristics of liquid crystal display panels and it does not mean the products are defective or damaged.

*2 Flickering may occur due to vibration, shock, or the display colors.

*3 When a stylus is used, the touch panel has a life of 100 thousand touches.
The stylus must satisfy the following specifications.
Material: Polyacetal resin
Tip radius: 0.8 mm or more

*4 To prevent the display section from burning in and lengthen the backlight life, enable the screen save function and turn off the backlight.

*5 If you touch two points or more simultaneously on the touch panel, a switch in an unintended location may operate.
Do not touch two points or more simultaneously on the touch panel.

*6 Note that the structure does not guarantee protection in all users' environments. The GOT should not be used in environments where it may be exposed to oil or chemicals for a long period of time, or where oil mist fills the air.

*7 Minimum size of a key that can be arranged.
To ensure safe use of the product, the following settings are recommended.
Key size: 16 × 16 dots or larger
Distance between keys: 16 dots or more

*8 The suffix "F" of IP67F is a symbol that indicates protection rate against oil.
It is described in the Appendix of JIS C 0920 of the Japanese Industrial Standards.

GT2308-V

Item		Specifications
		GT2308-VTBA GT2308-VTBD
Display section [*1*2]	Display device	TFT color LCD
	Screen size	8.4”
	Resolution	VGA: 640 × 480 dots
	Display size	170.9 (6.73) (W) × 128.2 (5.05) (H) mm (inch)
	Number of displayed characters	16-dot standard font: 40 characters × 30 lines (two-byte characters) 12-dot standard font: 53 characters × 40 lines (two-byte characters)
	Display color	65536 colors
	Brightness Adjustment	16 levels
	Backlight	LED (Not replaceable)
	Backlight life [*4]	Approx. 50000 h (Ambient temperature: 25°C, display intensity: 50%)
Touch panel [*3]	Type	Analog resistive film
	Key size	Minimum 2 × 2 dots [*7] (per key)
	Simultaneous press	Not available [*5] (Only 1 point can be touched.)
	Life	1 million touches or more (Operating force: 0.98 N or less)
User memory	User memory capacity	Memory for storage (ROM): 9MB, Memory for operation (RAM): 9MB
	Life (Number of writings)	100000 times
Built-in clock precision		±90 seconds/month (Ambient temperature: 25 °C)
Battery		GT11-50BAT lithium battery (option)
	Life	Approx. 5 years (Ambient temperature: 25 °C)
Built-in interface	RS-232	1 channel, transmission speed: 115200, 57600, 38400, 19200, 9600, 4800 bps Connector shape: D-sub 9-pin (male)
	RS-422/485	1 channel, transmission speed: 115200, 57600, 38400, 19200, 9600, 4800 bps Connector shape: D-sub 9-pin (female)
	Ethernet	1 channel Data transfer method: 100BASE-TX, 10BASE-T Connector shape: RJ45 (modular jack) AUTO MDI/MDI-X
	USB (Host)	1 channel (rear face)
		USB1.1 (Full-Speed 12 Mbps), Connector shape: USB-A
	USB (Device)	1 channel (rear face)
		USB1.1 (Full-Speed 12 Mbps), Connector shape: USB Mini-B
	SD card	1 channel, SDHC compliant (maximum 32 GB)
Buzzer output		Single tone (Tone length adjustable)
POWER LED		2 colors (blue and orange)
Protective structure		Front: IP67F [*6*8]
External dimensions		241 (9.49) (W) × 194 (7.64) (H) × 56 (2.20) (D) mm (inch)
Panel cutting dimensions		227 (8.94) (W) × 176 (6.93) (H) mm (inch)
Weight (excluding a fitting)		1.5 (3.3) kg (lb)
Compatible software package		GT Works3 Version1.100E or later

*1 As a characteristic of liquid crystal display panels, bright dots (always lit) and dark dots (never lit) may appear on the panel.
Since liquid crystal display panels comprise a great number of display elements, the appearance of bright and dark dots cannot be reduced to zero.
Individual differences in liquid crystal display panels may cause differences in color, uneven brightness and flickering.
Note that these phenomena are characteristics of liquid crystal display panels and it does not mean the products are defective or damaged.

*2 Flickering may occur due to vibration, shock, or the display colors.

*3 When a stylus is used, the touch panel has a life of 100 thousand touches.
The stylus must satisfy the following specifications.
Material: Polyacetal resin
Tip radius: 0.8 mm or more

*4 To prevent the display section from burning in and lengthen the backlight life, enable the screen save function and turn off the backlight.

*5 If you touch two points or more simultaneously on the touch panel, a switch in an unintended location may operate.
Do not touch two points or more simultaneously on the touch panel.

*6 Note that the structure does not guarantee protection in all users' environments. The GOT should not be used in environments where it may be exposed to oil or chemicals for a long period of time, or where oil mist fills the air.

*7 Minimum size of a key that can be arranged.
To ensure safe use of the product, the following settings are recommended.
Key size: 16 × 16 dots or larger
Distance between keys: 16 dots or more

*8 The suffix "F" of IP67F is a symbol that indicates protection rate against oil.
It is described in the Appendix of JIS C 0920 of the Japanese Industrial Standards.

GT2107-W

Item		Specifications
		GT2107-WTBD GT2107-WTSD
Display section [*1][*2]	Display device	TFT color LCD
	Screen size	7" wide screen
	Resolution	WVGA: 800 × 480 dots
	Display size	152.40 (6.00) (W) × 91.44 (3.60) (H) mm (inch)
	Number of displayed characters	16-dot standard font: 50 characters × 30 rows (Two-byte characters) 12-dot standard font: 66 characters × 40 rows (Two-byte characters)
	Display color	65536 colors
	Brightness Adjustment	32 levels
	Backlight	LED (Not replaceable)
	Backlight life [*3]	Approx. 50000 h (operating ambient temperature: 25 °C, display intensity: 50%)
Touch panel [*4]	Type	Analog resistive film
	Key size	Minimum 2 × 2 dots [*7] (per key)
	Simultaneous press	Not available [*5] (Only 1 point can be touched.)
	Life	1 million touches or more (Operating force: 0.98 N or less)
Human sensor	Detection length	—
	Detection temperature	—
User memory	User memory capacity	Memory for storage (ROM): 15 MB
	Life (Number of writings)	100000 times
Built-in clock precision		±45 seconds/month (Ambient temperature: 25 °C)
Battery		GT11-50BAT lithium battery
	Life	Approx. 5 years (Ambient temperature: 25 °C)
Built-in interface	RS-232	1 channel, transmission speed: 115200, 57600, 38400, 19200, 9600, 4800 bps Connector shape: D-sub 9-pin (male)
	RS-422/485	1 channel, transmission speed: 115200, 57600, 38400, 19200, 9600, 4800 bps Connector shape: D-sub 9-pin (female) Terminating resistor: 330 Ω, 100 Ω, OPEN (Selectable by the terminating resistor setting switch.) [*9]
	Ethernet	1 channel Data transfer method: 100BASE-TX, 10BASE-T Connector shape: RJ45 (modular jack) AUTO MDI/MDI-X
	USB (Host)	1 channel (rear face)
		USB1.1 (Full-Speed 12 Mbps), Connector shape: USB-A
	USB (Device)	1 channel (front face)
		USB1.1 (Full-Speed 12 Mbps), Connector shape: USB Mini-B
	SD card	1 channel, SDHC compliant (maximum 32 GB)
	Extension interface	—
	Auxiliary extension interface	—
	Side interface	—
Buzzer output		Single tone (Tone length adjustable)
POWER LED		—
Protective structure		Front: IP67F [*6][*8] In control panel: IP2X
External dimensions		189 (7.44) (W) × 142 (5.59) (H) × 48 (1.89) (D) mm (inch)
Panel cutting dimensions		180.5 (7.11) (W) × 133.5 (5.26) (H) mm (inch)
Weight (excluding a fitting)		0.7 (1.5) kg (lb)
Compatible software package		GT Works3 Version1.215Z or later

*1 As a characteristic of liquid crystal display panels, bright dots (always lit) and dark dots (never lit) may appear on the panel.
Since liquid crystal display panels comprise a great number of display elements, the appearance of bright and dark dots cannot be reduced to zero.
Individual differences in liquid crystal display panels may cause differences in color, uneven brightness and flickering.
Note that these phenomena are characteristics of liquid crystal display panels and it does not mean the products are defective or damaged.

*2 Flickering may occur due to vibration, shock, or the display colors.

*3 To prevent the display section from burning in and lengthen the backlight life, enable the screen save function and turn off the backlight.

*4 When a stylus is used, the touch panel has a life of 100 thousand touches.
The stylus must satisfy the following specifications.
Material: Polyacetal resin
Tip radius: 0.8 mm or more

*5 If you touch two points or more simultaneously on the touch panel, a switch in an unintended location may operate.
Do not touch two points or more simultaneously on the touch panel.

*6 To conform to IP67F, close the USB environmental protection cover by pushing the USB mark firmly. (The GOT conforms to IP2X when the USB environmental protection cover is open.)
Note that the structure does not guarantee protection in all users' environments. The GOT should not be used in environments where it may be exposed to oil or chemicals for a long period of time, or where oil mist fills the air.

*7 Minimum size of a key that can be arranged.
To ensure safe use of the product, the following settings are recommended.
Key size: 16 × 16 dots or larger
Distance between keys: 16 dots or more

*8 The suffix "F" of IP67F is a symbol that indicates protection rate against oil.
It is described in the Appendix of JIS C 0920 of the Japanese Industrial Standards.

*9 For the GOT multi-drop connection, set the terminating resistor setting switch of the GOT according to the connection type.
For the details of the GOT multi-drop connection, refer to the following.
GOT2000 Series Connection Manual (Mitsubishi Electric Products) For GT Works3 Version1

GT2105-Q

Item		Specifications	
		GT2105-QTBDS	GT2105-QMBDS
Display section [*1*2]	Display device	TFT color LCD	TFT monochrome LCD
	Screen size	5.7”	
	Resolution	QVGA: 320 × 240 dots	
	Display size	115 (4.53) (W) × 86 (3.39) (H) mm (inch)	
	Number of displayed characters	16-dot standard font: 20 characters × 15 rows (Two-byte characters) 12-dot standard font: 26 characters × 20 rows (Two-byte characters)	
	Display color	65536 colors	32-shade monochrome (black/white)
	Brightness adjustment	32 levels	
	Backlight	LED (Not replaceable)	
	Backlight life [*3]	Approx. 65000 h (Ambient temperature: 25°C, display intensity: 50%)	
Touch panel [*4]	Type	Analog resistive film	
	Key size	Minimum 2 × 2 dots [*7] (per key)	
	Simultaneous press	Not available [*5] (Only 1 point can be touched.)	
	Life	1 million touches or more (Operating force: 0.98 N or less)	
Human sensor	Detection length	—	
	Detection temperature	—	
User memory	User memory capacity	Memory for storage (ROM): 9 MB	
	Life (Number of writings)	100000 times	
Built-in clock precision		±45 seconds/month (Ambient temperature: 25 °C)	
Battery		GT11-50BAT lithium battery	
	Life	Approx. 5 years (Ambient temperature: 25 °C)	
Built-in interface	RS-232	1 channel, transmission speed: 115200, 57600, 38400, 19200, 9600, 4800 bps Connector shape: D-sub 9-pin (male)	
	RS-422/485	1 channel, transmission speed: 115200, 57600, 38400, 19200, 9600, 4800 bps Connector shape: D-sub 9-pin (female)	
	Ethernet	—	
	USB (Host)	—	
		—	
	USB (Device)	1 channel (front face)	
		USB1.1 (Full-Speed 12 Mbps), Connector shape: USB Mini-B	
	SD card	1 channel, SDHC compliant (maximum 32 GB)	
	Extension interface	—	
	Auxiliary extension interface	—	
	Side interface	—	
Buzzer output		Single tone (Tone length adjustable)	
POWER LED		2 colors (blue and orange)	
Protective structure		Front: IP67F [*6*8] In control panel: IP2X	
External dimensions		164 (6.46) (W) × 135 (5.32) (H) × 55 (2.17) (D) mm (inch)	
Panel cutting dimensions		153 (6.02) (W) × 121 (4.76) (H) mm (inch)	
Weight (Excluding installation fitting)		0.7 (1.5) kg (lb)	
Compatible software package		GT Works3 Version1.144A or later	

*1 As a characteristic of liquid crystal display panels, bright dots (always lit) and dark dots (never lit) may appear on the panel.
Since liquid crystal display panels comprise a great number of display elements, the appearance of bright and dark dots cannot be reduced to zero.
Individual differences in liquid crystal display panels may cause differences in color, uneven brightness and flickering.
Note that these phenomena are characteristics of liquid crystal display panels and it does not mean the products are defective or damaged.

*2 Flickering may occur due to vibration, shock, or the display colors.

*3 To prevent the display section from burning in and lengthen the backlight life, enable the screen save function and turn off the backlight.

*4 When a stylus is used, the touch panel has a life of 100 thousand touches.
The stylus must satisfy the following specifications.
Material: Polyacetal resin
Tip radius: 0.8 mm or more

*5 If you touch two points or more simultaneously on the touch panel, a switch in an unintended location may operate.
Do not touch two points or more simultaneously on the touch panel.

*6 To conform to IP67F, close the USB environmental protection cover firmly and tighten the fixing screw on the lower part of the cover in the specified torque range (0.36 N•m to 0.48 N•m). (The GOT conforms to IP2X when the USB environmental protection cover is open.)
Note that the structure does not guarantee protection in all users' environments. The GOT should not be used in environments where it may be exposed to oil or chemicals for a long period of time, or where oil mist fills the air.

*7 Minimum size of a key that can be arranged.
To ensure safe use of the product, the following settings are recommended.
Key size: 16 × 16 dots or larger

*8 The suffix "F" of IP67F is a symbol that indicates protection rate against oil.
It is described in the Appendix of JIS C 0920 of the Japanese Industrial Standards.

GT2104-R

Item		Specifications
		GT2104-RTBD
Display section [*1*2]	Display device	TFT color LCD
	Screen size	4.3"
	Resolution	480 × 272 dots
	Display size	95.0 (3.74) (W) × 53.8 (2.12) (H) mm (inch)
	Number of displayed characters	16-dot standard font: 30 characters × 17 rows (Two-byte characters) 12-dot standard font: 40 characters × 22 rows (Two-byte characters)
	Display color	65536 colors
	Brightness adjustment	32 levels
	Backlight	LED (Not replaceable)
	Backlight life [*3]	Approx. 50000 h (Ambient temperature: 25°C, display intensity: 50%)
Touch panel [*4]	Type	Analog resistive film
	Key size	Minimum 2 × 2 dots [*7] (per key)
	Simultaneous press	Not available [*5] (Only 1 point can be touched.)
	Life	1 million touches or more (Operating force: 0.98 N or less)
Human sensor	Detection length	—
	Detection temperature	—
User memory	User memory capacity	Memory for storage (ROM): 9 MB
	Life (Number of writings)	100000 times
Built-in clock precision		±45 seconds/month (Ambient temperature: 25 °C)
Battery		GT11-50BAT lithium battery
	Life	Approx. 5 years (Ambient temperature: 25 °C)
Built-in interface	RS-232	1 channel, transmission speed: 115200, 57600, 38400, 19200, 9600, 4800 bps Connector shape: 9-pin connector terminal block
	RS-422/485	1 channel, transmission speed: 115200, 57600, 38400, 19200, 9600, 4800 bps Connector shape: 9-pin connector terminal block
	Ethernet	1 channel Data transfer method: 100BASE-TX, 10BASE-T Connector shape: RJ45 (modular jack) AUTO MDI/MDI-X
	USB (Host)	—
		—
	USB (Device)	1 channel (rear face)
		USB1.1 (Full-Speed 12 Mbps), Connector shape: USB Mini-B
	SD card	1 channel, SDHC compliant (maximum 32 GB)
	Extension interface	—
	Auxiliary extension interface	—
	Side interface	—
Buzzer output		Single tone (Tone length adjustable)
POWER LED		—
Protective structure		Front: IP67F [*6*8] In control panel: IP2X
External dimensions		128 (5.04) (W) × 102 (4.02) (H) × 40 (1.57) (D) mm (inch)
Panel cutting dimensions		118 (4.65) (W) × 92 (3.62) (H) mm (inch)
Weight (Excluding installation fitting)		0.4 (0.88) kg (lb)
Compatible software package		GT Works3 Version1.122C or later

*1 As a characteristic of liquid crystal display panels, bright dots (always lit) and dark dots (never lit) may appear on the panel.
Since liquid crystal display panels comprise a great number of display elements, the appearance of bright and dark dots cannot be reduced to zero.
Individual differences in liquid crystal display panels may cause differences in color, uneven brightness and flickering.
Note that these phenomena are characteristics of liquid crystal display panels and it does not mean the products are defective or damaged.

*2 Flickering may occur due to vibration, shock, or the display colors.

*3 To prevent the display section from burning in and lengthen the backlight life, enable the screen save function and turn off the backlight.

*4 When a stylus is used, the touch panel has a life of 100 thousand touches.
The stylus must satisfy the following specifications.
Material: Polyacetal resin
Tip radius: 0.8 mm or more

*5 If you touch two points or more simultaneously on the touch panel, a switch in an unintended location may operate.
Do not touch two points or more simultaneously on the touch panel.

*6 Note that the structure does not guarantee protection in all users' environments. The GOT should not be used in environments where it may be exposed to oil or chemicals for a long period of time, or where oil mist fills the air.

*7 Minimum size of a key that can be arranged.
To ensure safe use of the product, the following settings are recommended.
Key size: 16 × 16 dots or larger

*8 The suffix "F" of IP67F is a symbol that indicates protection rate against oil.
It is described in the Appendix of JIS C 0920 of the Japanese Industrial Standards.

GT2104-P

Item		Specifications			
		GT2104-PMBD	GT2104-PMBDS	GT2104-PMBDS2	GT2104-PMBLS
Display section *1*2	Display device	TFT monochrome LCD			
	Screen size	4.5”			
	Resolution	384 × 128 dots			
	Display size	109.4 (4.31) (W) × 36.5 (1.44) (H) mm (inch)			
	Number of displayed characters	16-dot standard font: 24 characters × 8 rows (Two-byte characters) 12-dot standard font: 32 characters × 10 rows (Two-byte characters)			
	Display color	32-shade monochrome (black/white)			
	Brightness adjustment	32 levels			
	Backlight	5-color LED (white, green, pink, orange, red) (Not replaceable)			
	Backlight life *3	Approx. 50000 h (Ambient temperature: 25°C, display intensity: 50%)			
Touch panel *4	Type	Analog resistive film			
	Key size	Minimum 2 × 2 dots *7 (per key)			
	Simultaneous press	Not available *5 (Only 1 point can be touched.)			
	Life	1 million touches or more (Operating force: 0.98 N or less)			
Human sensor	Detection length	—			
	Detection temperature	—			
User memory	User memory capacity	Memory for storage (ROM): 6MB			
	Life (Number of writings)	100000 times			
Built-in clock precision		±45 seconds/month (Ambient temperature: 25 °C)			
Battery		GT11-50BAT lithium battery			
	Life	Approx. 5 years (Ambient temperature: 25 °C)			
Built-in interface	RS-232 (rear face)	—	1 channel, transmission speed: 115200, 57600, 38400, 19200, 9600, 4800 bps Connector shape: MINIDIN 6-pin (female)	1 channel, transmission speed: 115200, 57600, 38400, 19200, 9600, 4800 bps Connector shape: MINIDIN 6-pin (female)	—
	RS-232 (side face)	—	—	1 channel, transmission speed: 115200, 57600, 38400, 19200, 9600, 4800 bps Connector shape: 9-pin connector terminal block	—
	RS-422/485	1 channel, transmission speed: 115200, 57600, 38400, 19200, 9600, 4800 bps Connector shape: 5-pin connector terminal block	1 channel, transmission speed: 115200, 57600, 38400, 19200, 9600, 4800 bps Connector shape: 9-pin connector terminal block	—	—
	RS-422	—	—	—	1 channel, transmission speed: 115200, 57600, 38400, 19200, 9600, 4800 bps Connector shape: 9-pin connector terminal block *9
	Ethernet	1 channel Data transfer method: 100BASE-TX, 10BASE-T Connector shape: RJ45 (modular jack) AUTO MDI/MDI-X	—	—	—

Item		Specifications			
		GT2104-PMBD	GT2104-PMBDS	GT2104-PMBDS2	GT2104-PMBLS
Built-in interface	USB (Host)	—			
		—			
	USB (Device)	1 channel (rear face)			
		USB1.1 (Full-Speed 12 Mbps), Connector shape: USB Mini-B			
	SD card	1 channel, SDHC compliant (maximum 32 GB)			—
	Extension interface	—			
	Auxiliary extension interface	—			
	Side interface	—			
Buzzer output		Single tone (Tone length adjustable)			
POWER LED		—			
Protective structure		Front: IP67F *6*8 In control panel: IP2X			
External dimensions		145 (5.71) (W) × 76 (2.99) (H) × 32.5 (1.28) (D) mm (inch)	145 (5.71) (W) × 76 (2.99) (H) × 29.5 (1.16) (D) mm (inch)		
Panel cutting dimensions		137 (5.39) (W) × 66 (2.60) (H) mm (inch)			
Weight (Excluding installation fitting)		0.3 (0.66) kg (lb)			0.28 (0.62) kg (lb)
Compatible software package		GT Works3 Version1.131M or later		GT Works3 Version1.137T or later	

*1 As a characteristic of liquid crystal display panels, bright dots (always lit) and dark dots (never lit) may appear on the panel.
Since liquid crystal display panels comprise a great number of display elements, the appearance of bright and dark dots cannot be reduced to zero.
Individual differences in liquid crystal display panels may cause differences in color, uneven brightness and flickering.
Note that these phenomena are characteristics of liquid crystal display panels and it does not mean the products are defective or damaged.

*2 Flickering may occur due to vibration, shock, or the display colors.

*3 To prevent the display section from burning in and lengthen the backlight life, enable the screen save function and turn off the backlight.

*4 When a stylus is used, the touch panel has a life of 100 thousand touches.
The stylus must satisfy the following specifications.
Material: Polyacetal resin
Tip radius: 0.8 mm or more

*5 If you touch two points or more simultaneously on the touch panel, a switch in an unintended location may operate.
Do not touch two points or more simultaneously on the touch panel.

*6 Note that the structure does not guarantee protection in all users' environments. The GOT should not be used in environments where it may be exposed to oil or chemicals for a long period of time, or where oil mist fills the air.

*7 Minimum size of a key that can be arranged.
To ensure safe use of the product, the following settings are recommended.
Key size: 16 × 16 dots or larger

*8 The suffix "F" of IP67F is a symbol that indicates protection rate against oil.
It is described in the Appendix of JIS C 0920 of the Japanese Industrial Standards.

*9 Use a 3 m or shorter cable.

GT2103-P

Item		Specifications			
		GT2103-PMBD	GT2103-PMBDS	GT2103-PMBDS2	GT2103-PMBLS
Display section *1*2	Display device	TFT monochrome LCD			
	Screen size	3.8”			
	Resolution	320 × 128 dots			
	Display size	89.0 (3.50) (W) × 35.6 (1.40) (H) mm (inch)			
	Number of displayed characters	16-dot standard font: 20 characters × 8 rows (Two-byte characters) 12-dot standard font: 26 characters × 10 rows (Two-byte characters)			
	Display color	32-shade monochrome (black/white)			
	Brightness adjustment	32 levels			
	Backlight	5-color LED (white, green, pink, orange, red) (Not replaceable)			
	Backlight life *3	Approx. 50000 h (Ambient temperature: 25°C, display intensity: 50%)			
Touch panel *4	Type	Analog resistive film			
	Key size	Minimum 2 × 2 dots *9 (per key)			
	Simultaneous press	Not available *5 (Only 1 point can be touched.)			
	Life	1 million touches or more (Operating force: 0.98 N or less)			
Human sensor	Detection length	—			
	Detection temperature	—			
User memory	User memory capacity	Memory for storage (ROM): 3 MB			
	Life (Number of writings)	100000 times			
Built-in clock precision		—			
Battery		—			
	Life	—			
Built-in interface	RS-232 (rear face)	—	1 channel, transmission speed: 115200, 57600, 38400, 19200, 9600, 4800 bps Connector shape: MINIDIN 6-pin (female)	1 channel, transmission speed: 115200, 57600, 38400, 19200, 9600, 4800 bps Connector shape: MINIDIN 6-pin (female)	—
	RS-232 (side face)	—	—	1 channel, transmission speed: 115200, 57600, 38400, 19200, 9600, 4800 bps Connector shape: 9-pin connector terminal block	—
	RS-422/485	1 channel, transmission speed: 115200, 57600, 38400, 19200, 9600, 4800 bps Connector shape: 5-pin connector terminal block	1 channel, transmission speed: 115200, 57600, 38400, 19200, 9600, 4800 bps Connector shape: 9-pin connector terminal block	—	—
	RS-422	—	—	—	1 channel, transmission speed: 115200, 57600, 38400, 19200, 9600, 4800 bps Connector shape: 9-pin connector terminal block *11
	Ethernet	1 channel Data transfer method: 100BASE-TX, 10BASE-T Connector shape: RJ45 (modular jack) AUTO MDI/MDI-X	—	—	—

Item		Specifications			
		GT2103-PMBD	GT2103-PMBDS	GT2103-PMBDS2	GT2103-PMBLS
Built-in interface	USB (Host)	—			
		—			
	USB (Device)	1 channel (rear face)			
		USB1.1 (Full-Speed 12 Mbps), Connector shape: USB Mini-B			
	SD card *6	1 channel, SDHC compliant (maximum 32 GB)			—
	Extension interface	—			
	Auxiliary extension interface	—			
	Side interface	—			
Buzzer output		Single tone (Tone length adjustable)			
POWER LED		—			
Protective structure		Front: IP67F *7*10 In control panel: IP2X			
External dimensions		113 (4.45) (W) × 74 (2.91) (H) × 32 (1.26) (D) mm (inch)	113 (4.45) (W) × 74 (2.91) (H) × 27 (1.06) (D) mm (inch) *8		113 (4.45) (W) × 74 (2.91) (H) × 27 (1.26) (D) mm (inch)
Panel cutting dimensions		105 (4.13) (W) × 66 (2.60) (H) mm (inch)			
Weight (Excluding installation fitting)		0.2 (0.44) kg (lb)			0.18 (0.40) kg (lb)
Compatible software package		GT Works3 Version1.112S or later		GT Works3 Version1.119Z or later	

*1 As a characteristic of liquid crystal display panels, bright dots (always lit) and dark dots (never lit) may appear on the panel.
Since liquid crystal display panels comprise a great number of display elements, the appearance of bright and dark dots cannot be reduced to zero.
Individual differences in liquid crystal display panels may cause differences in color, uneven brightness and flickering.
Note that these phenomena are characteristics of liquid crystal display panels and it does not mean the products are defective or damaged.

*2 Flickering may occur due to vibration, shock, or the display colors.

*3 To prevent the display section from burning in and lengthen the backlight life, enable the screen save function and turn off the backlight.

*4 When a stylus is used, the touch panel has a life of 100 thousand touches.
The stylus must satisfy the following specifications.
Material: Polyacetal resin
Tip radius: 0.8 mm or more

*5 If you touch two points or more simultaneously on the touch panel, a switch in an unintended location may operate.
Do not touch two points or more simultaneously on the touch panel.

*6 The SD card unit (GT21-03SDCD), sold separately, needs to be mounted.

*7 Note that the structure does not guarantee protection in all users' environments. The GOT should not be used in environments where it may be exposed to oil or chemicals for a long period of time, or where oil mist fills the air.

*8 The dimension when the SD card unit (GT21-03SDCD) is mounted is 113 (4.45) (W) × 74 (2.91) (H) × 32 (1.26) (D) mm (inch).

*9 The minimum size of a key that can be arranged.
To ensure safe use of the product, the following settings are recommended.
Key size: 16 × 16 dots or larger

*10 The suffix "F" of IP67F is a symbol that indicates protection rate against oil.
It is described in the Appendix of JIS C 0920 of the Japanese Industrial Standards.

*11 Use a 3 m or shorter cable.

3.3 Specifications of Power Supply Section

The following shows the power supply specifications of the GOT.

Point

Operation at instantaneous power failure

If an instantaneous power failure occurs in the power supply and continues for more than the permissible period, the GOT may be reset.

Make sure to power on the unit more than 5 seconds after power-off.

GT27

Input power supply 100 V AC to 240 V AC

Item		Specifications			
		GT2715-XTBA	GT2712-STBA GT2712-STWA	GT2710-STBA GT2710-VTBA GT2710-VTWA	GT2708-STBA GT2708-VTBA
Power supply voltage		100 V AC to 240 V AC (+10%, -15%)			
Power supply frequency		50 Hz/60 Hz (±5%)			
Maximum apparent power		140 VA	100 VA		
Power consumption	Under the maximum load	51 W or less	44 W or less	41 W or less	41 W or less
	Main unit	25 W	19 W	17 W	15 W
	Main unit (Backlight OFF)	10 W	10 W	10 W	10 W
Inrush current		40 A or less (3 ms, ambient temperature: 25 °C, under the maximum load)	60 A or less (2 ms, ambient temperature: 25 °C, under the maximum load)		
Permissible instantaneous power failure time		20 ms or less (100 V AC or more)			
Noise immunity		Noise voltage: 1500 Vp-p, noise width: 1 μs, measured by a noise simulator with noise frequency ranging from 25 Hz to 60 Hz			
Withstand voltage		1500 V AC for 1 minute across power terminals and earth			
Insulation resistance		500 V DC across power terminals and earth, 10 MΩ or more by an insulation resistance tester			
Applicable wire size		0.75 mm^2 to 2 mm^2 (AWG18 to AWG14)			
Applicable solderless terminal		Solderless terminal for M3 screw RAA1.25-3, V2-S3.3, V2-N3A, FV2-N3A Manufacturer: J.S.T.MFG.CO.,LTD. Compatible wire: 18 to 16 AWG (RAA1.25-3 only), 16 to 14 AWG (others) Certification: UL/CSA Listed			
Applicable tightening torque (Terminal block terminal screw)		0.5 N·m to 0.8 N·m			

Input power supply 24 V DC

Item		Specifications				
		GT2715-XTBD	GT2712-STBD GT2712-STWD	GT2710-STBD GT2710-VTBD GT2710-VTWD	GT2708-STBD GT2708-VTBD	GT2705-VTBD
Power supply voltage		24 V DC (+25%, -20%)				
Power consumption	Under the maximum load	48 W or less	45 W or less	42 W or less	39 W or less	30 W or less
	Main unit	23 W	18 W	15 W	13 W	7 W
	Main unit (Backlight OFF)	8 W	8 W	8 W	8 W	5 W
Inrush current		5 A or less (20 ms, ambient temperature: 25 °C, under the maximum load)				69 A or less (1 ms, ambient temperature: 25 °C, under the maximum load)
Permissible instantaneous power failure time		10 ms or less				
Noise immunity		Noise voltage: 500 Vp-p, noise width: 1 μs, measured by a noise simulator with noise frequency ranging from 25 Hz to 60 Hz				
Withstand voltage		350 V AC for 1 minute across power terminals and earth				
Insulation resistance		500 V DC across power terminals and earth, 10 MΩ or more by an insulation resistance tester				
Applicable wire size		0.75 mm^2 to 2 mm^2 (AWG18 to AWG14)				
Applicable solderless terminal		Solderless terminal for M3 screw RAA1.25-3, V2-S3.3, V2-N3A, FV2-N3A Manufacturer: J.S.T.MFG.CO.,LTD. Compatible wire: 18 to 16 AWG (RAA1.25-3 only), 16 to 14 AWG (others) Certification: UL/CSA Listed				
Applicable tightening torque (Terminal block terminal screw)		0.5 N·m to 0.8 N·m				

GT2512-WX, GT2510-WX, GT2507-W

Input power supply 24 V DC

Item		Specifications		
		GT2512-WXTBD GT2512-WXTSD	GT2510-WXTBD GT2510-WXTSD	GT2507-WTBD GT2507-WTSD
Power supply voltage		24 V DC (+25%, -20%)		
Power consumption	Under the maximum load	20 W or less	16 W or less	16 W or less
	Main unit	14 W	9 W	9 W
	Main unit (Backlight OFF)	8 W	5 W	5 W
Inrush current		59 A or less (2 ms, ambient temperature: 25 °C, under the maximum load)		
Permissible instantaneous power failure time		5 ms or less		
Noise immunity		Noise voltage: 500 Vp-p, noise width: 1 μs, measured by a noise simulator with noise frequency ranging from 25 Hz to 60 Hz		
Withstand voltage		350 V AC for 1 minute across power terminals and earth		
Insulation resistance		500 V DC across power terminals and earth, 10 MΩ or more by an insulation resistance tester		
Applicable wire size		0.75 mm^2 to 2 mm^2 (AWG18 to AWG14)		
Applicable solderless terminal		Solderless terminal for M3 screw RAA1.25-3, V2-S3.3, V2-N3A, FV2-N3A		
Applicable tightening torque (Terminal block terminal screw)		0.5 N·m to 0.8 N·m		

GT2507T-W

Input power supply 24 V DC

Item		Specifications
		GT2507T-WTSD
Power supply voltage		24 V DC (+25%, -20%)
Power consumption	Under the maximum load	17 W or less
	Main unit	11 W
	Main unit (Backlight OFF)	7 W
Inrush current		59 A or less (2 ms, ambient temperature: 25 °C, under the maximum load)
Permissible instantaneous power failure time		5 ms or less
Noise immunity		Noise voltage: 500 Vp-p, noise width: 1 μs, measured by a noise simulator with noise frequency ranging from 25 Hz to 60 Hz
Withstand voltage		350 V AC for 1 minute across power terminals and earth
Insulation resistance		500 V DC across power terminals and earth, 10 MΩ or more by an insulation resistance tester
Applicable wire size		0.75 mm^2 to 2 mm^2 (AWG18 to AWG14)
Applicable solderless terminal		Solderless terminal for M3 screw RAA1.25-3, V2-S3.3, V2-N3A, FV2-N3A Manufacturer: J.S.T.MFG.CO.,LTD. Compatible wire: 18 to 16 AWG (RAA1.25-3 only), 16 to 14 AWG (others) Certification: UL/CSA Listed
Applicable tightening torque (Terminal block terminal screw)		0.5 N·m to 0.8 N·m

GT25-S, GT25-V

Input power supply 100 V AC to 240 V AC

Item		Specifications		
		GT2512-STBA GT2512F-STNA	GT2510-VTBA GT2510-VTWA GT2510F-VTNA	GT2508-VTBA GT2508-VTWA GT2508F-VTNA
Power supply voltage		100 V AC to 240 V AC (+10%, -15%)		
Power supply frequency		50 Hz/60 Hz (±5%)		
Maximum apparent power		80 VA	80 VA	70 VA
Power consumption	Under the maximum load	35 W or less	34 W or less	31 W or less
	Main unit	14 W	12 W	11 W
	Main unit (Backlight OFF)	7 W	7 W	7 W
Inrush current		60 A or less (2 ms, ambient temperature: 25 °C, under the maximum load)		
Permissible instantaneous power failure time		20 ms or less (100 V AC or more)		
Noise immunity		Noise voltage: 1500 Vp-p, noise width: 1 μs, measured by a noise simulator with noise frequency ranging from 25 Hz to 60 Hz		
Withstand voltage		1500 V AC for 1 minute across power terminals and earth		
Insulation resistance		500 V DC across power terminals and earth, 10 MΩ or more by an insulation resistance tester		
Applicable wire size		0.75 mm^2 to 2 mm^2 (AWG18 to AWG14)		
Applicable solderless terminal		Solderless terminal for M3 screw RAA1.25-3, V2-S3.3, V2-N3A, FV2-N3A Manufacturer: J.S.T.MFG.CO.,LTD. Compatible wire: 18 to 16 AWG (RAA1.25-3 only), 16 to 14 AWG (others) Certification: UL/CSA Listed		
Applicable tightening torque (Terminal block terminal screw)		0.5 N·m to 0.8 N·m		

Input power supply 24 V DC

Item		Specifications			
		GT2512-STBD GT2512F-STND	GT2510-VTBD GT2510-VTWD GT2510F-VTND	GT2508-VTBD GT2508-VTWD GT2508F-VTND	GT2505-VTBD
Power supply voltage		24 V DC (+25%, -20%)			24 V DC (+10%, -15%)
Power consumption	Under the maximum load	37 W or less	33 W or less	31 W or less	8.4 W or less
	Main unit	13 W	10 W	8 W	4.3 W
	Main unit (Backlight OFF)	6 W	6 W	6 W	2.6 W
Inrush current		5 A or less (20 ms, ambient temperature: 25 °C, under the maximum load)			42 A or less (2 ms, operating ambient temperature 25, maximum load)
Permissible instantaneous power failure time		10 ms or less			
Noise immunity		Noise voltage: 500 Vp-p, noise width: 1 μs, measured by a noise simulator with noise frequency ranging from 25 Hz to 60 Hz			Noise voltage: 1000 Vp-p, noise width: 1 μs, measured by a noise simulator with noise frequency ranging from 30 Hz to 100 Hz
Withstand voltage		350 V AC for 1 minute across power terminals and earth			500 V AC for 1 minute across power terminals and earth
Insulation resistance		500 V DC across power terminals and earth, 10 MΩ or more by an insulation resistance tester			
Applicable wire size		0.75 mm^2 to 2 mm^2 (AWG18 to AWG14)			
Applicable solderless terminal		Solderless terminal for M3 screw RAA1.25-3, V2-S3.3, V2-N3A, FV2-N3A Manufacturer: J.S.T.MFG.CO.,LTD. Compatible wire: 18 to 16 AWG (RAA1.25-3 only), 16 to 14 AWG (others) Certification: UL/CSA Listed			
Applicable tightening torque (Terminal block terminal screw)		0.5 N·m to 0.8 N·m			

Input power supply 24 V DC

Item		Specifications	
		GT2506HS-VTBD	GT2505HS-VTBD
Power supply voltage		24 V DC (+10%, -15%)	
Power consumption	Under the maximum load	11.6 W or less	8.4 W or less
	Backlight OFF	8.2 W	7.0 W
Inrush current		30 A or less (2 ms, ambient temperature: 25 °C, under the maximum load)	
Permissible instantaneous power failure time		5 ms or less	
Noise immunity		Noise voltage: 1000 Vp-p, noise width: 1 μs, measured by a noise simulator with noise frequency ranging from 30 Hz to 100 Hz	
Withstand voltage		500 V DC for 1 minute across power supply terminals and earth	
Insulation resistance		500 V DC across power terminals and earth, 10 MΩ or more by an insulation resistance tester	

Input power supply 100 V AC to 240 V AC

Item		Specifications			
		GT2310-VTBA		GT2308-VTBA	
Power supply voltage		100 V AC to 240 V AC (+10%, -15%)			
Power supply frequency		50 Hz/60 Hz (±5%)			
Maximum apparent power		44 VA (under the maximum load)		30 VA (under the maximum load)	
Power consumption	Under the maximum load	18 W or less		11 W or less	
	Main unit	15 W		9 W	
	Main unit (Backlight OFF)	10 W	10 W	10 W	10 W
Inrush current		40 A or less (4 ms, ambient temperature: 25°C, under the maximum load)			
Permissible instantaneous power failure time		20 ms or less (100 V AC or more)			
Noise immunity		Noise voltage: 1500 Vp-p, noise width: 1 μs, measured by a noise simulator with noise frequency ranging from 25 Hz to 60 Hz			
Withstand voltage		1500 V AC for 1 minute across power terminals and earth			
Insulation resistance		500 V DC across power terminals and earth, 10 MΩ or more by an insulation resistance tester			
Applicable wire size		0.75 mm^2 to 2 mm^2 (AWG18 to AWG14)			
Applicable solderless terminal		Solderless terminal for M3 screw RAA1.25-3, V2-S3.3, V2-N3A, FV2-N3A			
Applicable tightening torque (Terminal block terminal screw)		0.5 N·m to 0.8 N·m			

Input power supply 24 V DC

Item		Specifications	
		GT2310-VTBD	GT2308-VTBD
Power supply voltage		100 V AC to 240 V AC (+25%, -20%)	
Power consumption	Under the maximum load	16 W or less	11 W or less
	Main unit	13 W	8 W
	Main unit (Backlight OFF)	7 W	6 W
Inrush current		40 A or less (2 ms, ambient temperature: 25°C, under the maximum load)	
Permissible instantaneous power failure time		10 ms or less	
Noise immunity		Noise voltage: 500 Vp-p, noise width: 1 μs, measured by a noise simulator with noise frequency ranging from 25 Hz to 60 Hz	
Withstand voltage		350 V AC for 1 minute across power terminals and earth	
Insulation resistance		500 V DC across power terminals and earth, 10 MΩ or more by an insulation resistance tester	
Applicable wire size		0.75 mm^2 to 2 mm^2 (AWG18 to AWG14)	
Applicable solderless terminal		Solderless terminal for M3 screw RAA1.25-3, V2-S3.3, V2-N3A, FV2-N3A	
Applicable tightening torque (Terminal block terminal screw)		0.5 N·m to 0.8 N·m	

Input power supply 24 V DC/5 V DC

■For GT2107-W, GT2105

Item		Specifications		
		GT2107-WTBD GT2107-WTSD	GT2105-QTBDS	GT2105-QMBDS
Power supply voltage		24 V DC (+10%, -15%)		
Power consumption	Under the maximum load	11.3 W or less	4.5 W or less	2.9 W or less
	Backlight OFF	7.0 W	2.2 W	2.2 W
Inrush current		35 A or less (3 ms, ambient temperature: 25 °C, under the maximum load)	27 A or less (2 ms, ambient temperature: 25 °C, under the maximum load)	
Permissible instantaneous power failure time		5 ms or less		
Noise immunity		Noise voltage: 1000 Vp-p, noise width: 1 μs, measured by a noise simulator with noise frequency ranging from 30 Hz to 100 Hz		
Withstand voltage		500 V AC for 1 minute across power terminals and earth		
Insulation resistance		500 V DC across power terminals and earth, 10 MΩ or more by an insulation resistance tester		
Applicable wire size		For power supply: 0.75 mm^2 (AWG18) or more, For grounding: 2 mm^2 (AWG14) or more		
Applicable solderless terminal		Solderless terminal for M3 screw RAA1.25-3, V2-N3A, FV2-N3A		
Applicable tightening torque (Terminal block terminal screw)		0.5 N·m to 0.8 N·m		

■For GT2104, GT2103

Item		Specifications						
		GT2104-RTBD	GT2104-PMBD	GT2104-PMBDS GT2104-PMBDS2	GT2103-PMBD	GT2103-PMBDS	GT2103-PMBDS2	GT2103-PMBLS GT2104-PMBLS
Power supply voltage		24 V DC (+10%, -15%)						5 V DC (+5%, -5%) Power from the sequencer
Power consumption	Under the maximum load	4.4 W or less	2.9 W or less	2.2 W or less	2.6 W or less	2.2 W or less[*1]	2.2 W or less	1.1 W or less
	Backlight OFF	2.9 W	2.2 W	1.5 W	2.0 W	1.6 W[*1]	1.6 W	0.7 W
Inrush current		18 A or less (2 ms, ambient temperature: 25 °C, under the maximum load)	30 A or less (1 ms, ambient temperature: 25 °C, under the maximum load)					—
Permissible instantaneous power failure time		5 ms or less						—
Noise immunity		Noise voltage: 1000 Vp-p, noise width: 1 μs, measured by a noise simulator with noise frequency ranging from 30 Hz to 100 Hz						
Withstand voltage		500 V AC for 1 minute across power terminals and earth						—
Insulation resistance		500 V DC across power terminals and earth, 10 MΩ or more by an insulation resistance tester						—
Applicable wire size		Single wiring: solid wire 0.14 to 1.5 mm^2 (AWG26 to AWG16), stranded wire 0.14 to 1.0 mm^2 (AWG26 to AWG18), or rod terminal with an insulation sleeve 0.25 to 0.5 mm^2 (AWG24 to AWG20) Double wiring: solid wire 0.14 to 0.5 mm^2 (AWG26 to AWG20) or stranded wire 0.14 to 0.2 mm^2 (AWG26 to AWG24)						
Applicable solderless terminal		AI 0.25-6BU (AWG24), AI 0.34-6TQ (AWG22), AI 0.5-6WH (AWG20) (manufactured by PHOENIX CONTACT) Swage: CRIMPFOX 6 (manufactured by PHOENIX CONTACT)						
Applicable tightening torque (Terminal block terminal screw)		0.22 N·m to 0.25 N·m						

*1 For hardware version D or earlier, the power consumption is as follows:
Maximum load: 1.9 W or less.
Backlight off: 1.3 W

3.4 Battery Specifications

Applicable battery

The following batteries are applicable for GOT2000 series.

Model name	Description	Target GOT
GT11-50BAT	Battery for backup of SRAM data, clock data, and system status log data *3	GT27 GT25 *2 GT23 GT21 *1
GT15-BAT	Battery for backup of SRAM data, clock data, and system status log data	GT2506HS-V

*1 GT2103-P does not have a built-in battery.
*2 Not available to GT2506HS-V.
*3 GT21 does not support the system status log data backup function.

Battery specifications

The following describes the battery specifications for the GOT2000 series.

Item	Specifications	
	GT27 GT25 *2 GT23 GT21 *1	**GT2506HS-V**
Model name	GT11-50BAT	GT15-BAT
Type	Manganese dioxide lithium primary battery	
Initial voltage	3.0 V	
Nominal current	550 mAh	1800 mAh
Storage life	Approx.5 years (Operating ambient temperature of 25°C)	
Total power stoppage time	☞ Page 119 Retention period of the battery-backed data	
Lithium content	0.00015 kg (1.7 lb)	0.00057 kg (1.7 lb)

*1 GT2103-P does not have a built-in battery.
*2 Not available to GT2506HS-V.

Point

For the battery directive in EU member states, refer to the following.
☞ Page 370 Handling of batteries and devices with built-in batteries in EU member states

Retention period of the battery-backed data

The following shows the retainable period of battery-backed data when the GOT is turned off.

■GT27, GT25, GT23, GT21 (excluding GT25HS, GT2507T-W, and GT2103-P)

Ambient temperature 0 to 25 °C	Operating ambient temperature of 25 to 45°C	Operating ambient temperature of 45 to 55°C	Data backup time after detection of battery voltage low *1
3 years	4 years	3 years	14 days

*1 If the battery connector is disconnected or the battery lead is broken, the data retention period after power-off varies depending on the GOT.
GT27, GT25 (excluding GT2505, GT25HS-V, and GT2507T-W): 5 minutes
GT2505, GT23, GT21 (excluding GT2103-P): 30 seconds

■GT25HS-V

Operating ambient temperature of 0 to 25°C	Operating ambient temperature of 25 to 40°C	Data backup time after detection of battery voltage low *1
3 years	4 years	14 days

*1 If the battery connector is disconnected or the battery lead is broken, the data retention period after power-off varies depending on the GOT.
GT2506HS-V: 5 minutes
GT2505HS-V: 30 seconds

■GT2507T-W

Operating ambient temperature of -20 to 25°C	Operating ambient temperature of 25 to 45°C	Operating ambient temperature of 45 to 65°C	Data backup time after detection of battery voltage low *1
3 years	4 years	3 years	14 days

*1 If the battery connector is disconnected or the battery lead is broken, the data retention period after power-off is five minutes.

Point

Battery life and replacement time

• GT27, GT25, GT23, and GT21 (excluding GT25HS-V and GT2103-P)

Battery life reference: Approx.5 years in actual use (Ambient temperature: 25°C)

Battery replacement time reference: 3 to 4 years

The battery is susceptible to self-discharge. Consult your local sales office when necessary.

• GT25HS-V

Battery life reference: Approx.5 years in actual use (Ambient temperature: 25°C)

Battery replacement time reference: 3 to 4 years

The battery is susceptible to self-discharge. Consult your local sales office when necessary.

• Check if the battery condition is normal within the utility.

Refer to the following for details on the battery status display.

GOT2000 Series User's Manual (Utility)

MEMO

4 PART NAMES AND SETTINGS

- Page 121 GT27
- Page 125 GT2512-WX, GT2510-WX, GT2507-W
- Page 128 GT2507T-W
- Page 130 GT25-S, GT25-V
- Page 136 GT25HS-V
- Page 144 GT21

4.1 GT27

GT2715-X

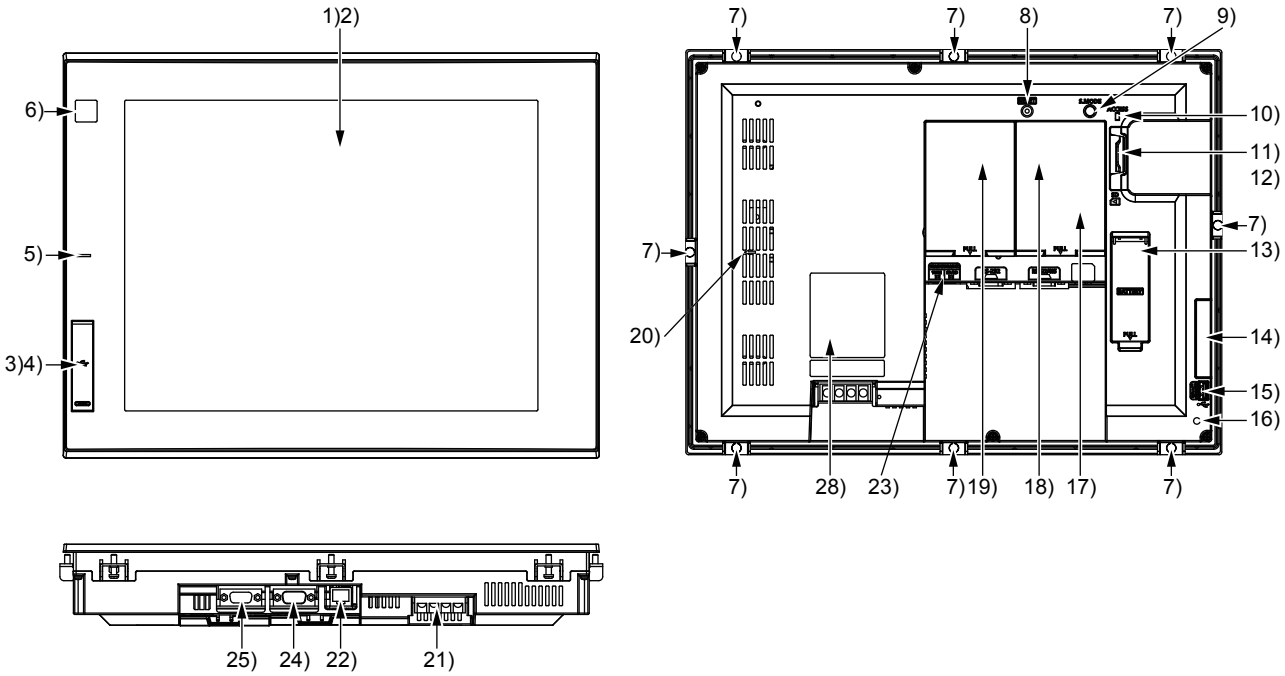

For the names of parts, refer to the following.

☞ Page 124 Part names and settings of GT27

GT2712-S

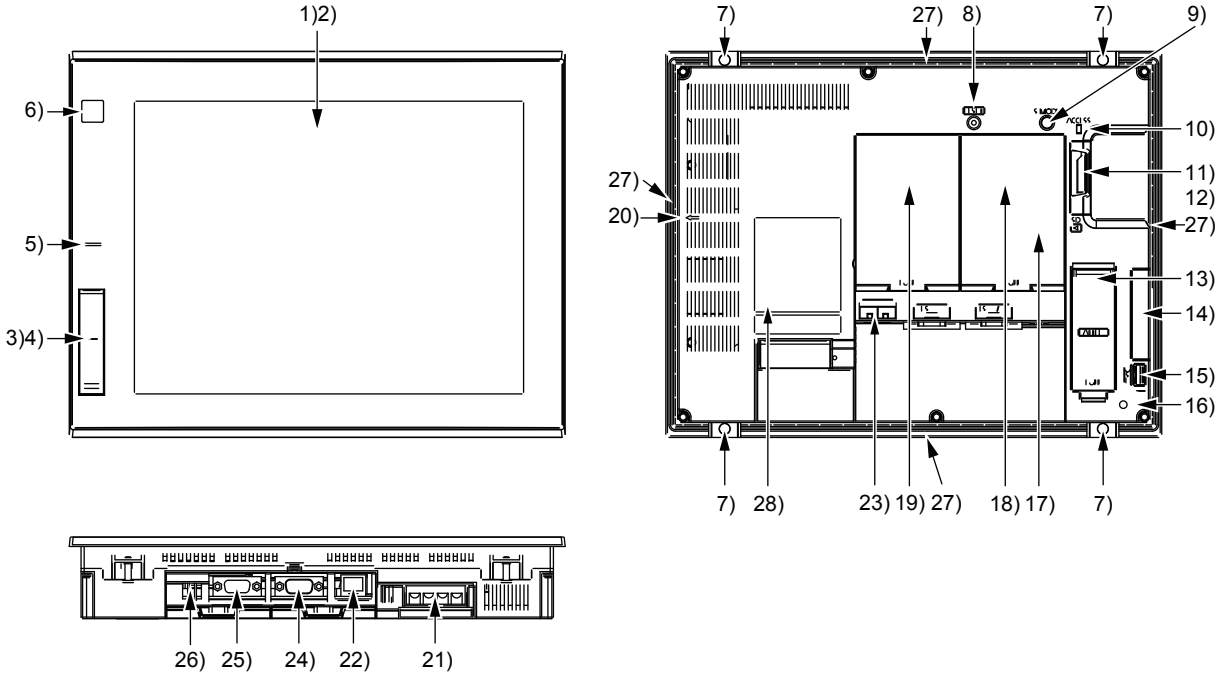

For the names of parts, refer to the following.

☞ Page 124 Part names and settings of GT27

GT2710-S, GT2710-V

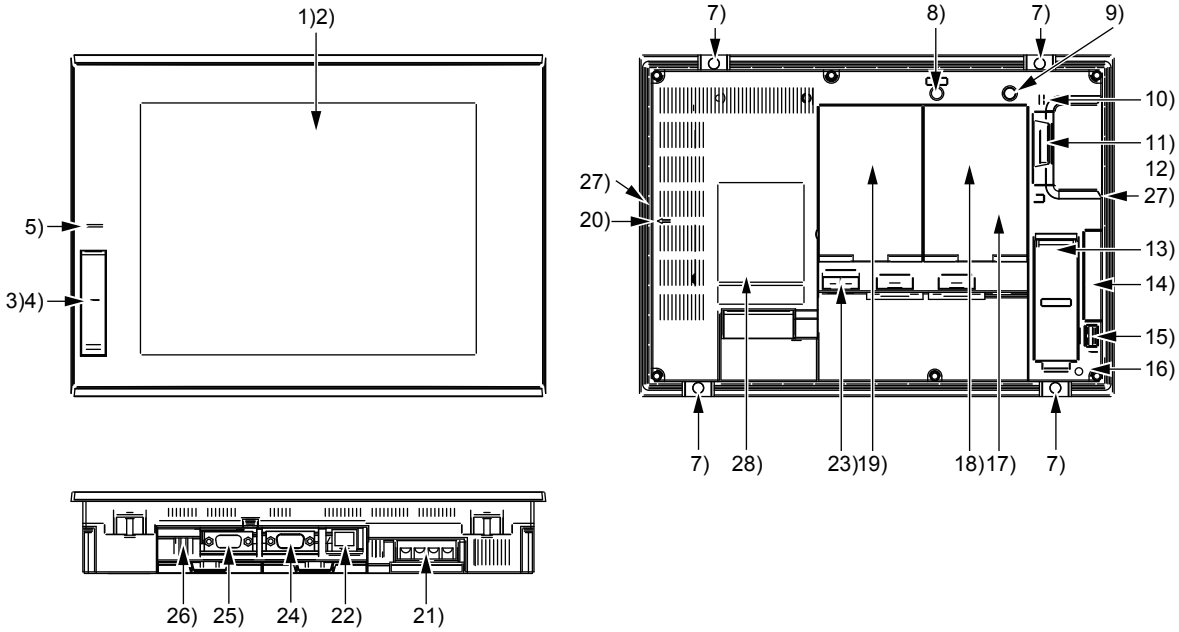

For the names of parts, refer to the following.

☞ Page 124 Part names and settings of GT27

GT2708-S, GT2708-V

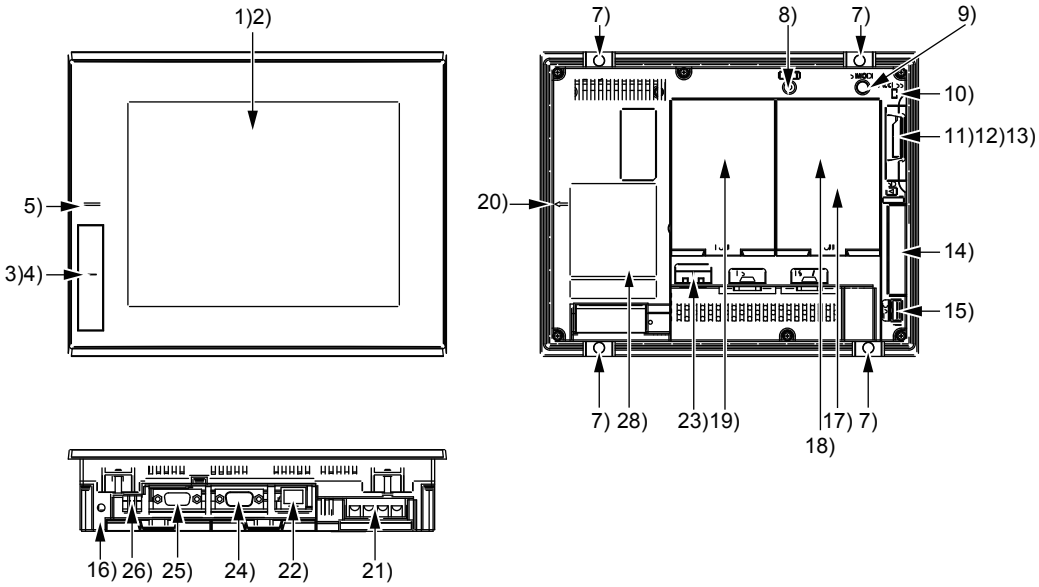

For the names of parts, refer to the following.

☞ Page 124 Part names and settings of GT27

GT2705-V

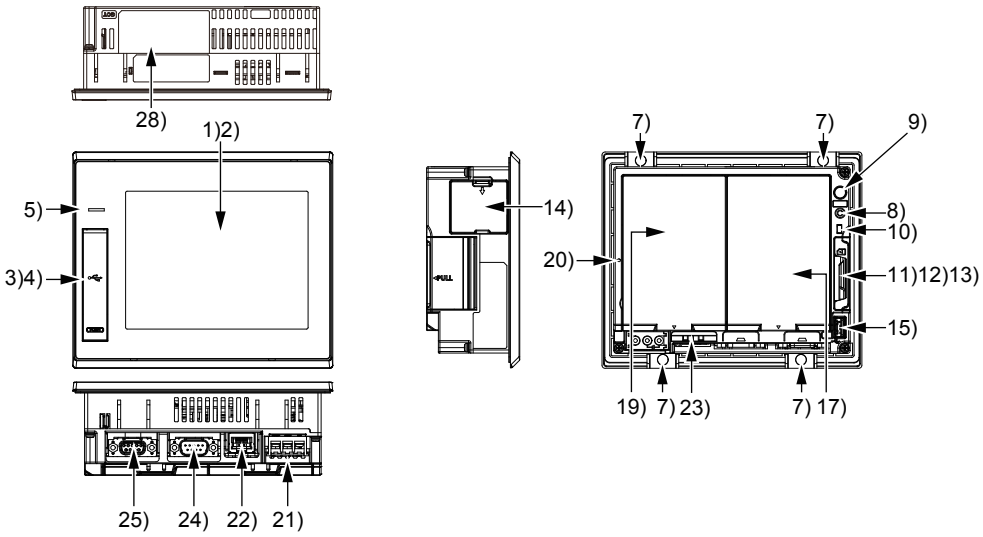

For the names of parts, refer to the following.

☞ Page 124 Part names and settings of GT27

Part names and settings of GT27

No.	Name	Description
1)	Display section	Displays the utility and the user-created screen.
2)	Touch panel	For operating the touch switches in the utility and the user-created screen
3)	USB interface (Host/front)	For connecting a USB mouse, a USB keyboard, or a USB barcode reader, and transferring or saving data (Connector shape: TYPE-A) Applicable models: GT2715-XTBA/D, GT2712-STBA/D, GT2710-STBA/D, GT2710-VTBA/D, GT2708-STBA/D, GT2708-VTBA/D, GT2705-VTBD
4)	USB interface (Device/front)	For connecting a personal computer (Connector shape: Mini-B) Applicable models: GT2715-XTBA/D, GT2712-STBA/D, GT2710-STBA/D, GT2710-VTBA/D, GT2708-STBA/D, GT2708-VTBA/D, GT2705-VTBD
5)	POWER LED	Lit in blue: Power is properly supplied. Lit in orange: Screen saving Blinks in orange and blue: Backlight failure Not lit: Power is not supplied.
6)	Human sensor	Detects human movement. Applicable models: GT2715-XTBA/D and GT2712-STBA/D
7)	Unit installation fitting	Mounting fixtures for fixing the GOT to the control panel
8)	Reset switch	Hardware reset switch
9)	S.MODE switch	Used for OS installation at the GOT startup
10)	SD card access LED	ON: SD card installed Blink: SD card accessed OFF: SD card not installed or SD card installed but removal possible
11)	SD card interface (inside the cover)	For installing an SD card
12)	SD card cover	Has the function to switch the access to the SD card between enabled and disabled states. When the cover is opened: Access prohibited When the cover is closed: Access allowed
13)	Battery (inside the cover)	Space for housing the battery
14)	Side interface (inside the cover)	For installing a communication unit
15)	USB interface (Host/back)	For connecting a USB mouse, a USB keyboard, or a USB barcode reader, and transferring or saving data (Connector shape: TYPE-A)
16)	Cable clamp mounting hole	Cable clamp mounting hole as a precaution against a disconnection of the USB cable
17)	Terminating resistor setting switch (inside the cover)	Switches the terminating resistor for the RS-422/485 communication port between used and unused states (initial setting (unused))
18)	Auxiliary extension interface	For installing an option unit Applicable models: GT2715-XTBA/D, GT2712-STBA/D, GT2712-STWA/D, GT2710-STBA/D, GT2710-VTBA/D, GT2710-VTWA/D, GT2708-STBA/D, GT2708-VTBA/D
19)	Extension interface	For installing a communication unit or an option unit
20)	Vertical installation arrow mark	For the vertical installation, install the GOT so that the arrow points upward.
21)	Power terminal	Power input terminal, FG terminal, LG terminal (except GT2705-VTBD)
22)	Ethernet interface	For communicating with a controller or connecting a personal computer (Connector shape: RJ45 (modular jack))
23)	Ethernet communication status LED	SD/RD LED ON: Data sent or received SD/RD LED OFF: Data not sent or received SPEED LED ON: Communicating at 100 Mbps SPEED LED OFF: Communicating at 10 Mbps or disconnected
24)	RS-232 interface	For communicating with a controller (connector shape: D-sub 9-pin (male), #4-40UNC inch screw thread) For the pin layout of the connector, refer to the following. 📖GOT2000 Series Connection Manual (Mitsubishi Electric Products) For GT Works3 Version1
25)	RS-422/485 interface	For communicating with a controller (connector shape: D-sub 9-pin (female), M2.6 metric screw thread) For the pin layout of the connector, refer to the following. 📖GOT2000 Series Connection Manual (Mitsubishi Electric Products) For GT Works3 Version1
26)	USB interface (Device/back)	For connecting a personal computer (Connector shape: Mini-B) Applicable model: GT2712-STWA/D, GT2710-VTWA/D
27)	Special fitting installation hole *1	For fixing the GOT to the control panel to comply with the ATEX directive and KCs regulation Applicable model: GT2712-STWD, GT2710-VTWD
28)	Rating plate	—

*1 The special fittings are sold separately.
To obtain the special fittings, contact your local sales office.

4.2 GT2512-WX, GT2510-WX, GT2507-W

GT2512-WX

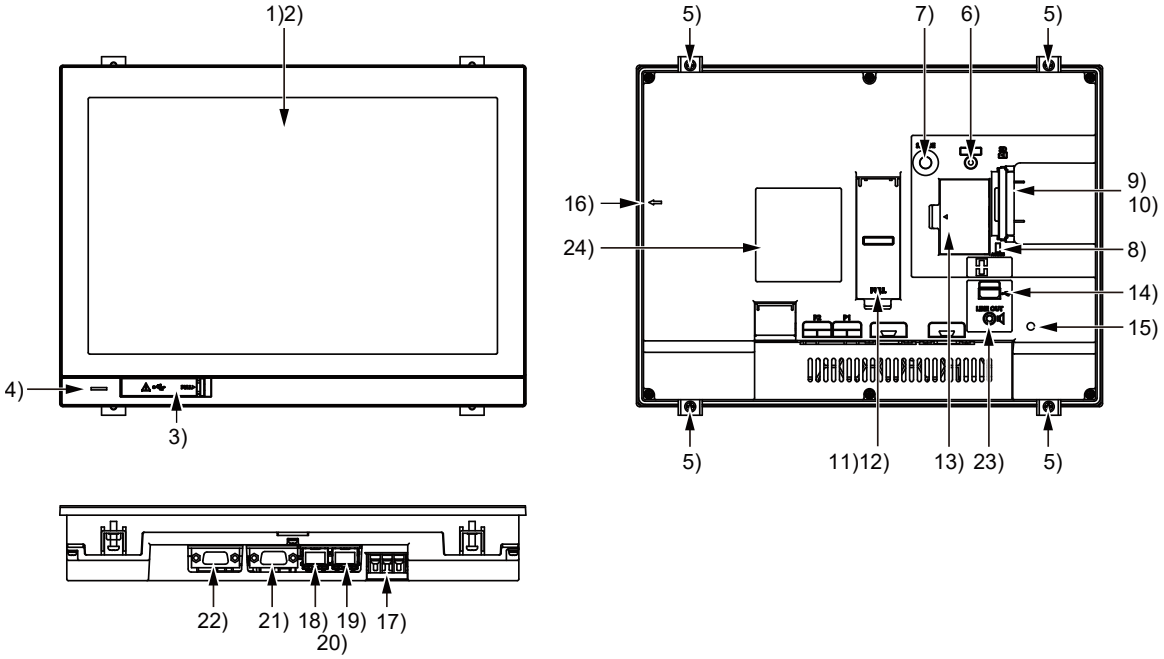

For the names of parts, refer to the following.

☞ Page 127 Part names and settings of GT2512-WX, GT2510-WX, and GT2507-W

GT2510-WX

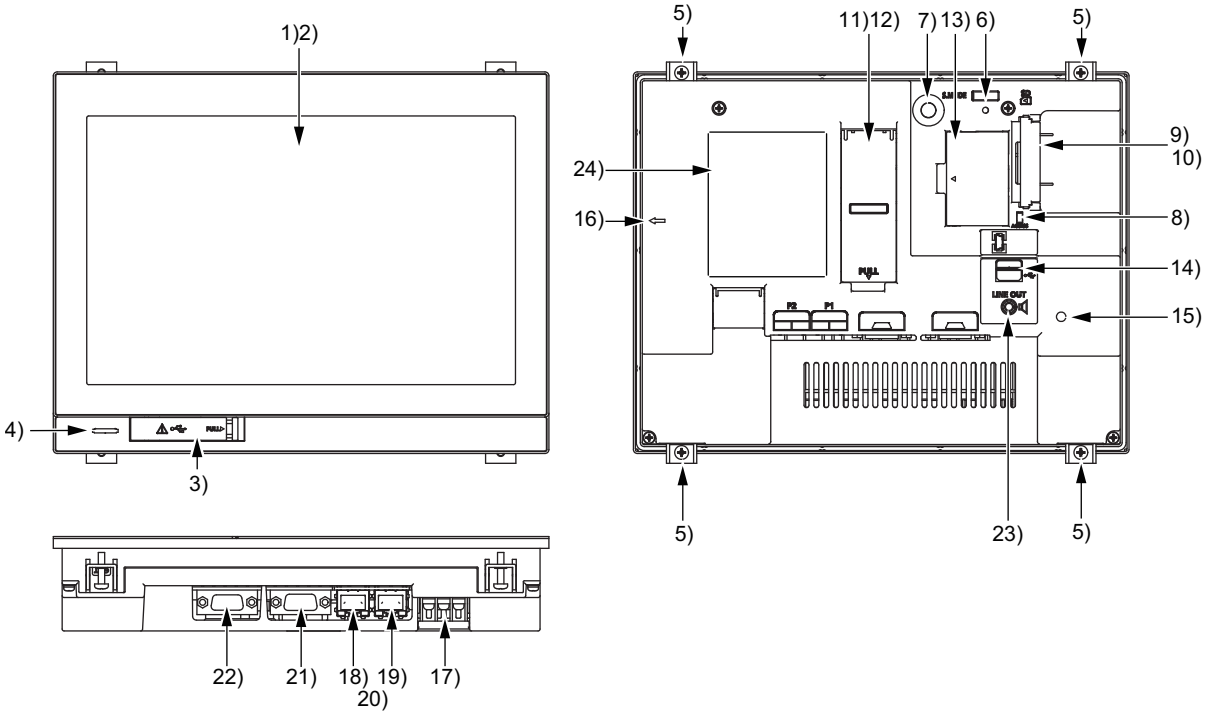

For the names of parts, refer to the following.

☞ Page 127 Part names and settings of GT2512-WX, GT2510-WX, and GT2507-W

GT2507-W

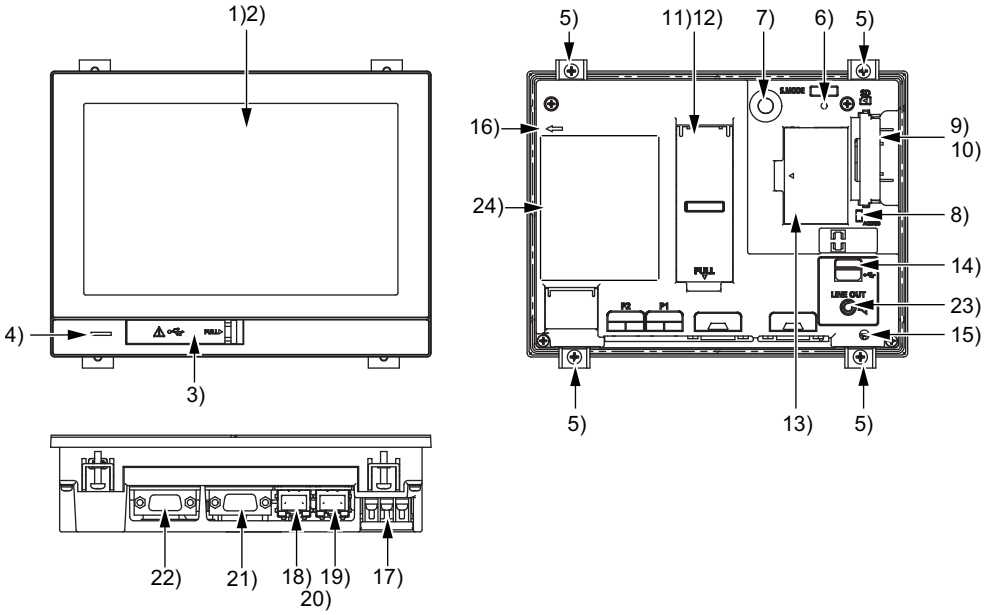

For the names of parts, refer to the following.

☞ Page 127 Part names and settings of GT2512-WX, GT2510-WX, and GT2507-W

Part names and settings of GT2512-WX, GT2510-WX, and GT2507-W

No.	Name	Description
1)	Display section	Displays the utility and the user-created screen.
2)	Touch panel	For operating the touch switches in the utility and the user-created screen
3)	USB interface (Device/front)	For connecting a personal computer (Connector shape: Mini-B) ⚠mark: *1
4)	POWER LED	Lit in blue: Power is properly supplied. Lit in orange: Screen saving Blinks in orange and blue: Backlight failure Not lit: Power is not supplied.
5)	Unit installation fitting	Mounting fixtures for fixing the GOT to the control panel
6)	Reset switch	Hardware reset switch
7)	S.MODE switch	Used for OS installation at the GOT startup
8)	SD card access LED	ON: SD card installed Blink: SD card accessed OFF: SD card not installed or SD card installed but removal possible
9)	SD card interface (inside the cover)	For installing an SD card
10)	SD card cover	Has the function to switch the access to the SD card between enabled and disabled states. When the cover is opened: Access prohibited When the cover is closed: Access allowed
11)	Battery (inside the cover)	Space for housing the battery
12)	Terminating resistor setting switch (inside the cover)	Switches the terminating resistor for the RS-422/485 communication port between used and unused states (initial setting (unused))
13)	Wireless LAN communication unit interface (inside the cover)	For installing a wireless LAN communication unit
14)	USB interface (Host/back)	For connecting a USB mouse, a USB keyboard, or a USB barcode reader, and transferring or saving data (Connector shape: TYPE-A)
15)	Cable clamp mounting hole	For attaching a cable clamp to prevent the USB cable or the sound output cable from being accidentally pulled out
16)	Vertical installation arrow mark	For the vertical installation, install the GOT so that the arrow points upward.
17)	Power terminal	Power input terminal, FG terminal
18)	Ethernet interface (port 1)	For communicating with a controller or connecting a personal computer (connector shape: RJ45 (modular jack))
19)	Ethernet interface (port 2)	
20)	Ethernet communication status LED	SD/RD LED ON: Data sent or received SD/RD LED OFF: Data not sent or received SPEED LED ON: Communicating at 100 Mbps SPEED LED OFF: Communicating at 10 Mbps or disconnected
21)	RS-422/485 interface	For communicating with a controller (connector shape: D-sub 9-pin (female), M2.6 metric screw thread) For the pin layout of the connector, refer to the following. 📖GOT2000 Series Connection Manual (Mitsubishi Electric Products) For GT Works3 Version1
22)	RS-232 interface	For communicating with a controller (connector shape: D-sub 9-pin (male), #4-40UNC inch screw thread) For the pin layout of the connector, refer to the following. 📖GOT2000 Series Connection Manual (Mitsubishi Electric Products) For GT Works3 Version1
23)	Sound output interface	For outputting sounds (applicable plug: Φ3.5 stereo mini-plug (3-prong))
24)	Rating plate	⚠mark: *2*3

*1 When you remove the USB cable from the GOT, support it by hand after the successful completion dialog is displayed.
For closing the USB environmental protection cover, fix the cover to the GOT by firmly pushing the USB mark on the latch to comply with the protective structure.

*2 Leave the GOT on for more than 10 minutes before replacing the battery.
Replace the battery within five minutes.
Use GT11-50BAT for the battery. Incorrect handling may cause the battery to explode.
Dispose of the battery as industrial waste.

*3 Use the copper wires for the wires to be connected to the power supply terminal.

4.3 GT2507T-W

GT2507T-W

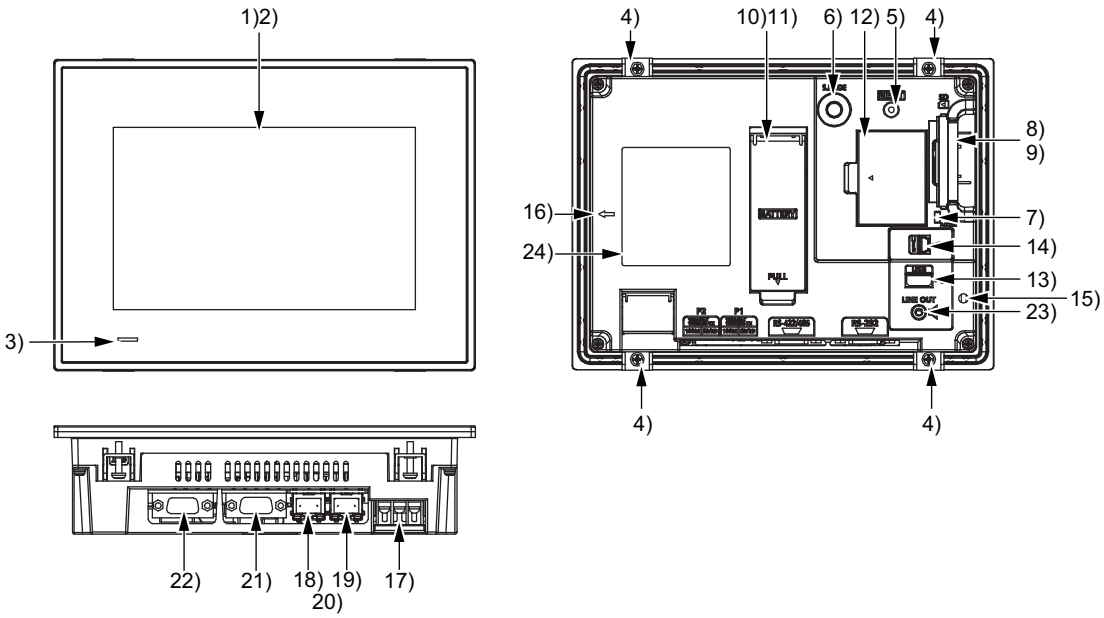

For the names of parts, refer to the following.

☞ Page 129 Part names and settings of GT2507T-W

Part names and settings of GT2507T-W

No.	Name	Description
1)	Display section	Displays the utility and the user-created screen.
2)	Touch panel	For operating the touch switches in the utility and the user-created screen
3)	POWER LED	Lit in blue: Power is properly supplied. Lit in orange: Screen saving Blinks in orange and blue: Backlight failure Not lit: Power is not supplied.
4)	Unit installation fitting	Mounting fixtures for fixing the GOT to the control panel
5)	Reset switch	Hardware reset switch
6)	S.MODE switch	Used for OS installation at the GOT startup
7)	SD card access LED	ON: SD card installed Blink: SD card accessed OFF: SD card not installed or SD card installed but removal possible
8)	SD card interface (inside the cover)	For installing an SD card
9)	SD card cover	Has the function to switch the access to the SD card between enabled and disabled states. When the cover is opened: Access prohibited When the cover is closed: Access allowed
10)	Battery (inside the cover)	Space for housing the battery
11)	Terminating resistor setting switch (inside the cover)	Switches the terminating resistor for the RS-422/485 communication port between used and unused states (initial setting (unused))
12)	Wireless LAN communication unit interface (inside the cover)	For installing a wireless LAN communication unit
13)	USB interface (Host/back)	For connecting a USB mouse, a USB keyboard, or a USB barcode reader, and transferring or saving data (Connector shape: TYPE-A)
14)	USB interface (Device/back)	For connecting a personal computer (Connector shape: Mini-B)
15)	Cable clamp mounting hole	For attaching a cable clamp to prevent the USB cable or the sound output cable from being accidentally pulled out
16)	Vertical installation arrow mark	For the vertical installation, install the GOT so that the arrow points upward.
17)	Power terminal	Power input terminal, FG terminal
18)	Ethernet interface (port 1)	For communicating with a controller or connecting a personal computer (connector shape: RJ45 (modular jack))
19)	Ethernet interface (port 2)	
20)	Ethernet communication status LED	SD/RD LED ON: Data sent or received SD/RD LED OFF: Data not sent or received SPEED LED ON: Communicating at 100 Mbps SPEED LED OFF: Communicating at 10 Mbps or disconnected
21)	RS-422/485 interface	For communicating with a controller (connector shape: D-sub 9-pin (female), M2.6 metric screw thread) For the pin layout of the connector, refer to the following. 📖GOT2000 Series Connection Manual (Mitsubishi Electric Products) For GT Works3 Version1
22)	RS-232 interface	For communicating with a controller (connector shape: D-sub 9-pin (male), #4-40UNC inch screw thread) For the pin layout of the connector, refer to the following. 📖GOT2000 Series Connection Manual (Mitsubishi Electric Products) For GT Works3 Version1
23)	Sound output interface	For outputting sounds (applicable plug: Φ3.5 stereo mini-plug (3-prong))
24)	Rating plate	⚠mark: *1*2

*1 Leave the GOT on for more than 10 minutes before replacing the battery.
Replace the battery within five minutes.
Use GT11-50BAT for the battery.
Incorrect handling may cause the battery to explode.
Dispose of the battery as industrial waste.

*2 Use the copper wires for the wires to be connected to the power supply terminal.

4.4 GT25-S, GT25-V

GT2512-S

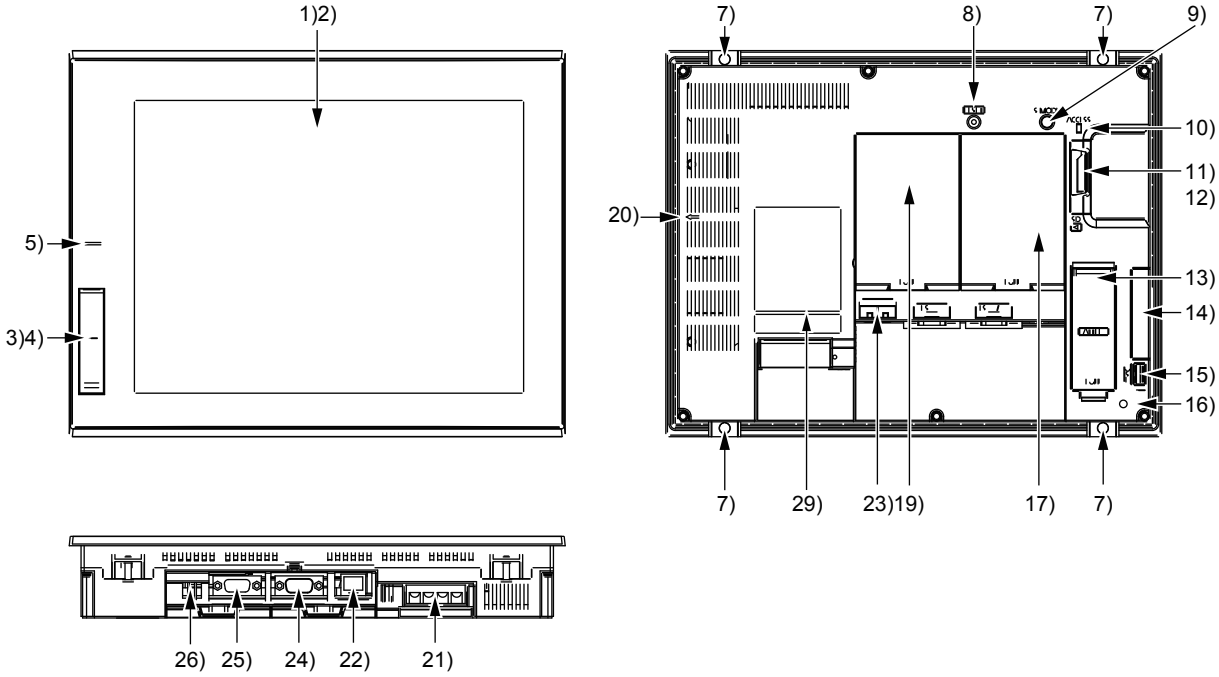

For the names of parts, refer to the following.

☞ Page 134 Part names and settings of GT25-S and GT25-V

GT2512F-S

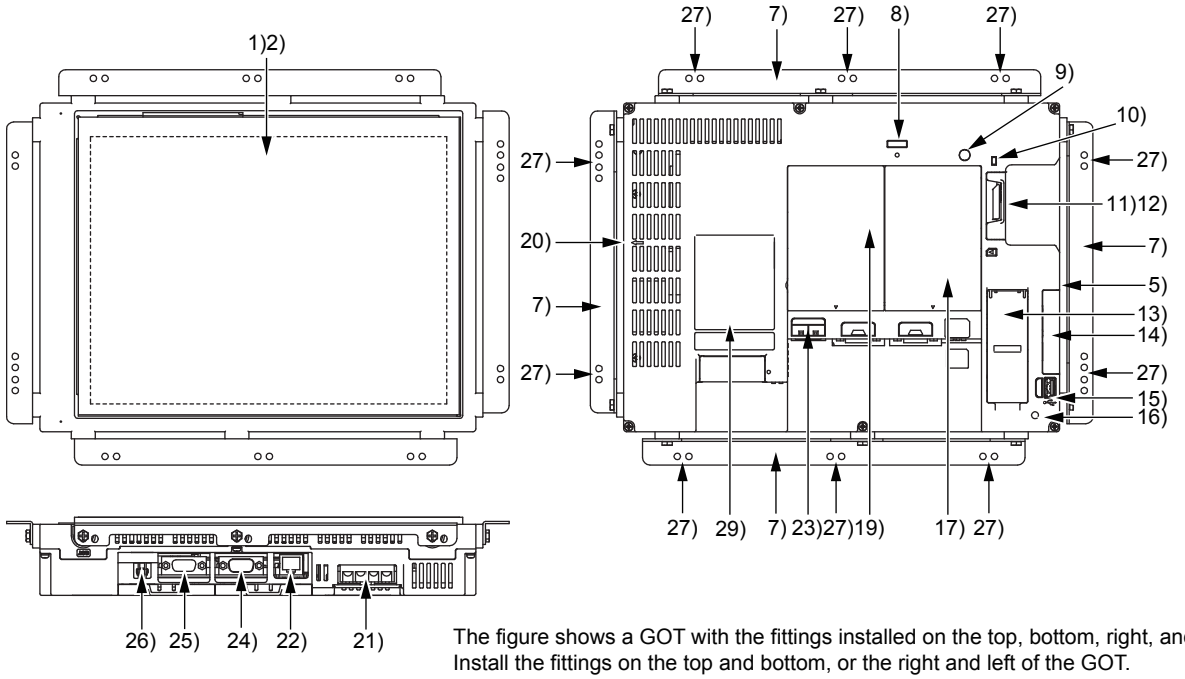

The figure shows a GOT with the fittings installed on the top, bottom, right, and left. Install the fittings on the top and bottom, or the right and left of the GOT.

For the names of parts, refer to the following.

☞ Page 134 Part names and settings of GT25-S and GT25-V

GT2510-V

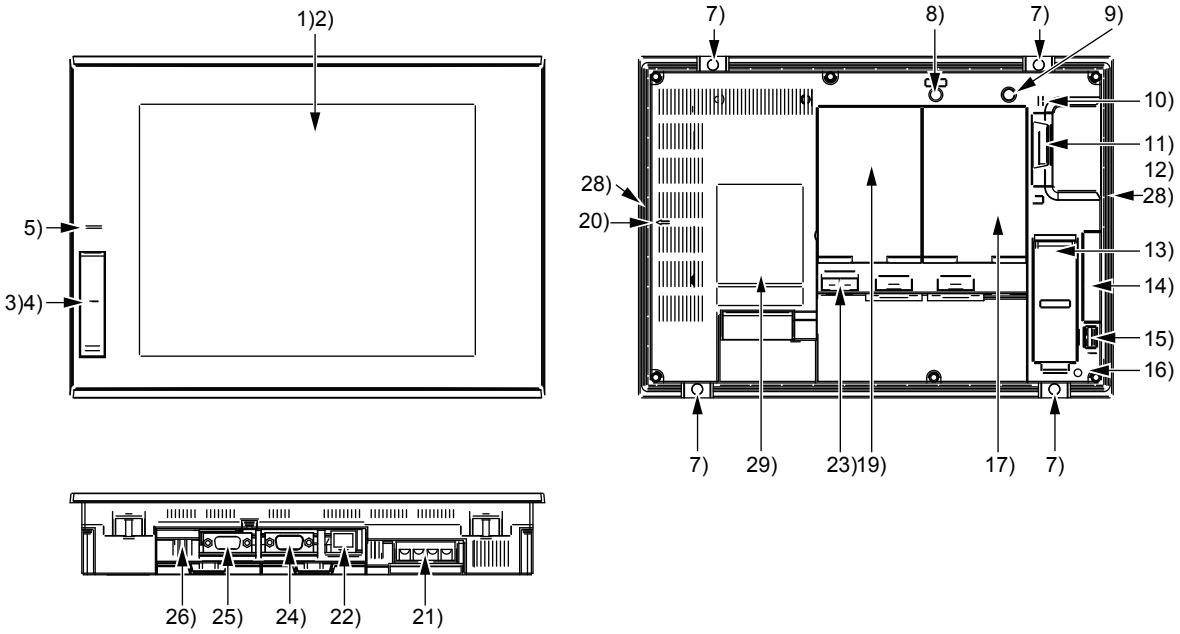

For the names of parts, refer to the following.

☞ Page 134 Part names and settings of GT25-S and GT25-V

GT2510F-V

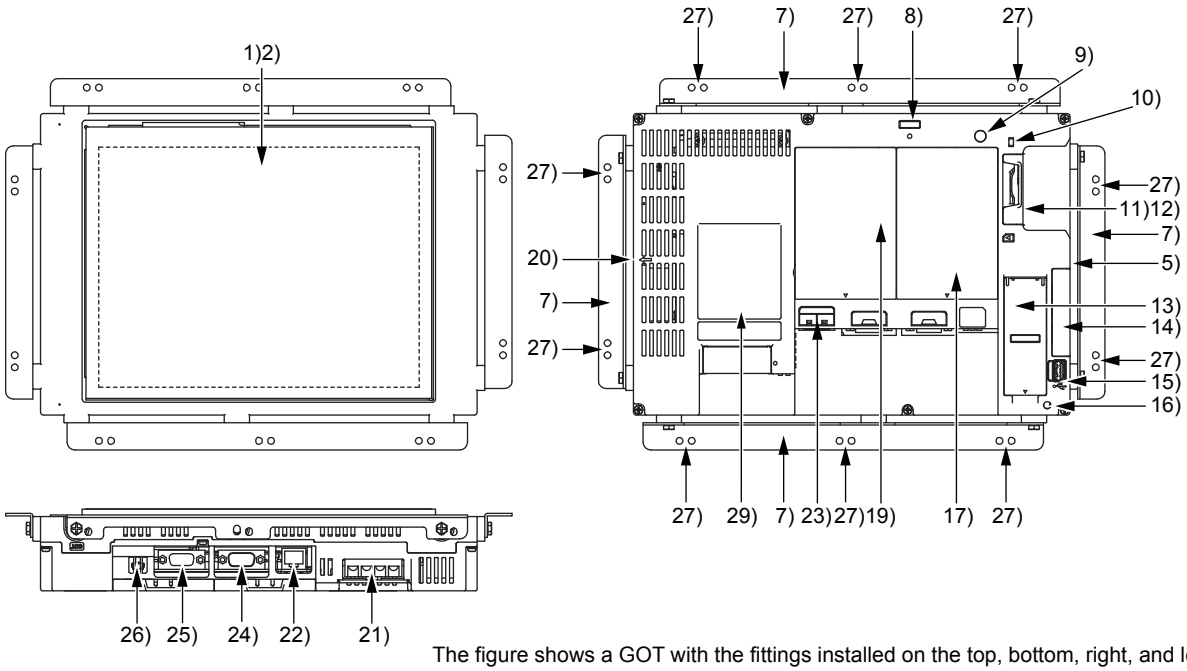

The figure shows a GOT with the fittings installed on the top, bottom, right, and left.
Install the fittings on the top and bottom, or the right and left of the GOT.

For the names of parts, refer to the following.

☞ Page 134 Part names and settings of GT25-S and GT25-V

GT2508-V

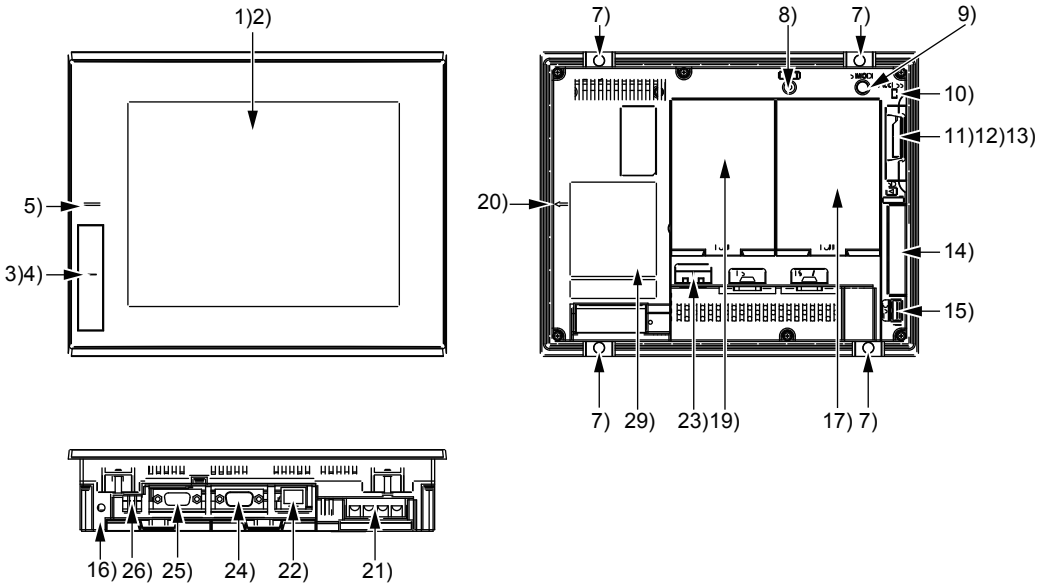

For the names of parts, refer to the following.

☞ Page 134 Part names and settings of GT25-S and GT25-V

GT2508F-V

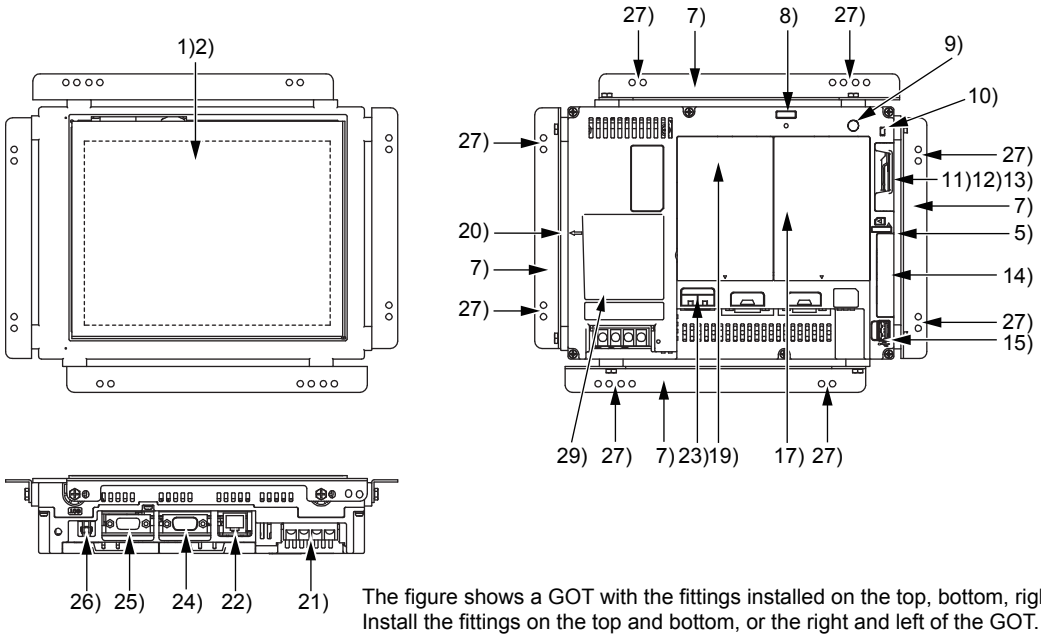

The figure shows a GOT with the fittings installed on the top, bottom, right, and left.
Install the fittings on the top and bottom, or the right and left of the GOT.

For the names of parts, refer to the following.

☞ Page 134 Part names and settings of GT25-S and GT25-V

GT2505-V

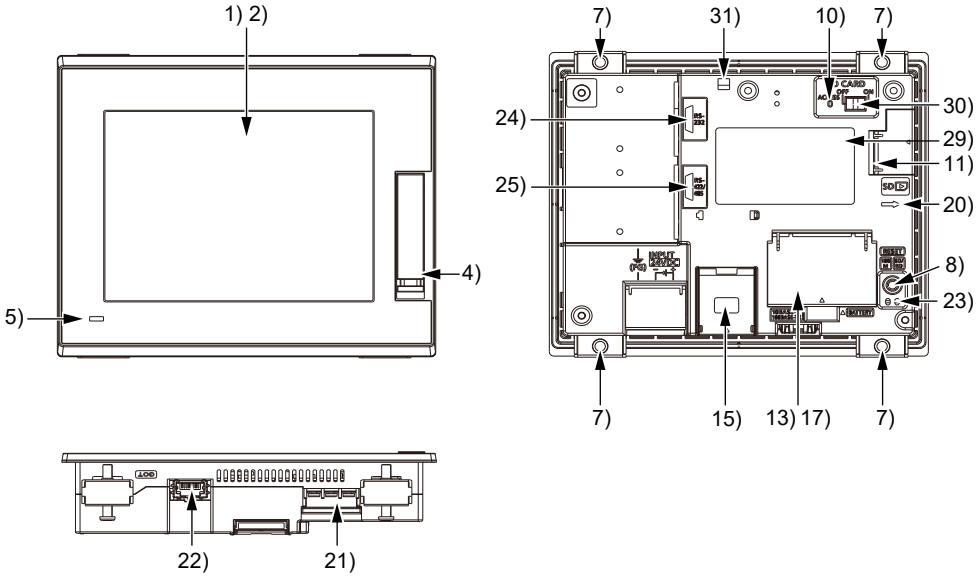

For the names of parts, refer to the following.

☞ Page 134 Part names and settings of GT25-S and GT25-V

Part names and settings of GT25-S and GT25-V

No.	Name	Description
1)	Display section	Displays the utility and the user-created screen.
2)	Touch panel	For operating the touch switches in the utility and the user-created screen
3)	USB interface (Host/front)	For connecting a USB mouse, a USB keyboard, or a USB barcode reader, and transferring or saving data (Connector shape: USB-A) Applicable models: GT2512-STBA/D, GT2510-VTBA/D, GT2508-VTBA/D
4)	USB interface (Device/front)	For connecting a personal computer (Connector shape: USB Mini-B) Applicable models: GT2512-STBA/D, GT2510-VTBA/D, GT2508-VTBA/D, GT2505-V
5)	POWER LED	Lit in blue: Power is properly supplied. Lit in orange: Screen saving Blinks in orange and blue: Backlight failure Not lit: Power is not supplied. (For GT2512F-STNA/D, GT2510F-VTNA/D, and GT2508F-VTNA/D, you can check the LED status from the GOT rear face.)
7)	Unit installation fitting	Mounting fixtures for fixing the GOT to the control panel
8)	Reset switch	Hardware reset switch
9)	S.MODE switch *3	Used for OS installation at the GOT startup
10)	SD card access LED	ON: SD card installed Blink: SD card accessed OFF: SD card not installed or SD card installed but removal possible
11)	SD card interface (inside the cover)	For installing an SD card
12)	SD card cover	Has the function to switch the access to the SD card between enabled and disabled states. When the cover is opened: Access prohibited When the cover is closed: Access allowed
13)	Battery (inside the cover)	Space for housing the battery
14)	Side interface (inside the cover)	For installing a communication unit
15)	USB interface (Host/back)	For connecting a USB mouse, a USB keyboard, or a USB barcode reader, and transferring or saving data (Connector shape: USB-A)
16)	Cable clamp mounting hole	Cable clamp mounting hole as a precaution against a disconnection of the USB cable
17)	Terminating resistor setting switch (inside the cover)	• GT2512, GT2510, GT2508 Switches the terminating resistor for the RS-422/485 communication port between used and unused states (initial setting (unused)) • GT2505-V For switching the terminating resistor setting of the RS-422/485 communication port to 330 Ω, 110 Ω, or OPEN (Default: 330 Ω)
19)	Extension interface	For installing a communication unit or an option unit
20)	Vertical installation arrow mark	For the vertical installation, install the GOT so that the arrow points upward.
21)	Power terminal	Power input terminal, FG terminal, LG terminal *2
22)	Ethernet interface	For communicating with a controller or connecting a personal computer (Connector shape: RJ45 (modular jack))
23)	Ethernet communication status LED	SD/RD LED ON: Data sent or received SD/RD LED OFF: Data not sent or received SPEED LED ON: Communicating at 100 Mbps SPEED LED OFF: Communicating at 10 Mbps or disconnected
24)	RS-232 interface	For communicating with a controller (connector shape: D-sub 9-pin (male), #4-40UNC inch screw thread) For the pin layout of the connector, refer to the following. GOT2000 Series Connection Manual (Mitsubishi Electric Products) For GT Works3 Version1
25)	RS-422/485 interface	For communicating with a controller (connector shape: D-sub 9-pin (female), M2.6 metric screw thread) For the pin layout of the connector, refer to the following. GOT2000 Series Connection Manual (Mitsubishi Electric Products) For GT Works3 Version1
26)	USB interface (Device/back)	For connecting a personal computer (Connector shape: USB Mini-B) Applicable models: GT2512F-STNA/D, GT2510-VTWA/D, GT2510F-VTNA/D, GT2508-VTWA/D, GT2508F-VTNA/D
27)	Fitting installation hole	For fixing the fitting to the control panel Applicable models: GT2512F-STNA/D, GT2510F-VTNA/D, and GT2508F-VTNA/D
28)	Special fitting installation hole *1	For fixing the GOT to the control panel to comply with the ATEX directive and KCs regulation Applicable model: GT2510-VTWD
29)	Rating plate	—

No.	Name	Description
30)	SD card access switch	For enabling or disabling the access to the SD card when the SD card is inserted/removed to/from the GOT ON: SD card access allowed (The SD card cannot be removed.) OFF: SD card access prohibited (The SD card can be removed.)
31)	USB cable fixing hole	For passing through a cable tie used to fix the USB cable to prevent the cable from being accidentally pulled out

*1 The special fittings are sold separately.
To obtain the special fittings, contact your local sales office.

*2 GT2505 does not have the LG terminal.

*3 GT2505-V does not have the S.MODE switch.
To install OSs on the GT2505-V, refer to the following.
GT Designer3 (GOT2000) Screen Design Manual

4.5 GT25HS-V

GT2506HS-V

Front Panel

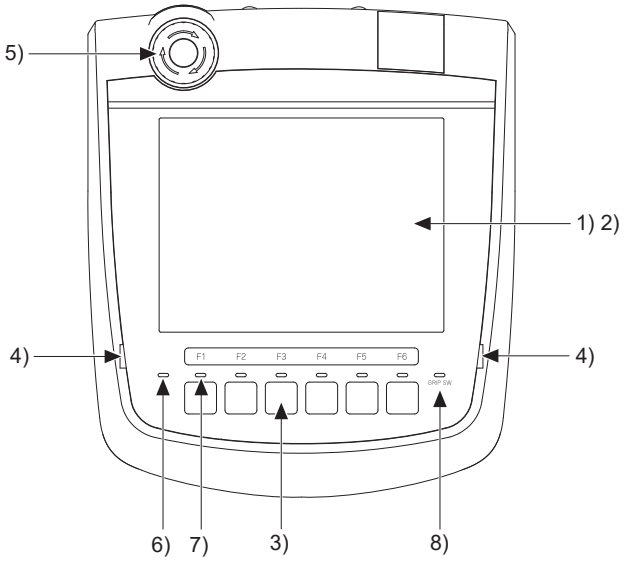

For the names of parts, refer to the following.

☞ Page 140 Part names and settings of GT25HS-V

Back Panel

Environmental protection back cover closed

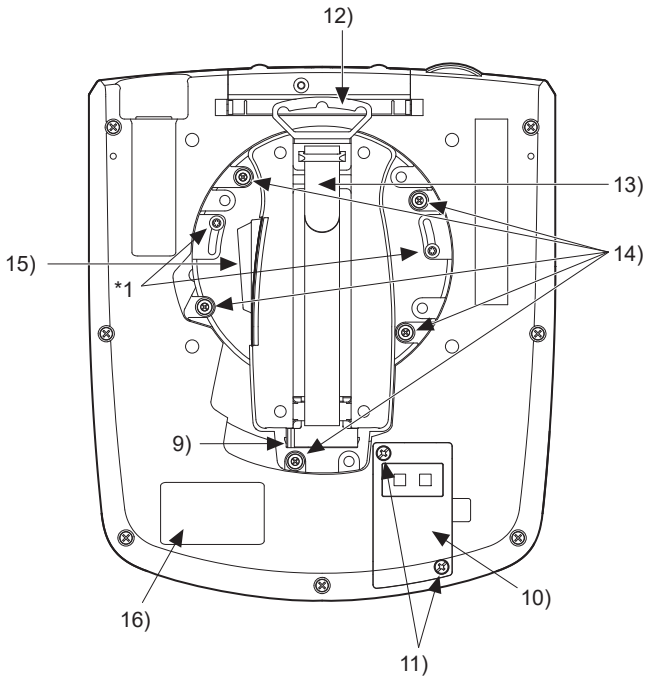

Environmental protection back cover opened

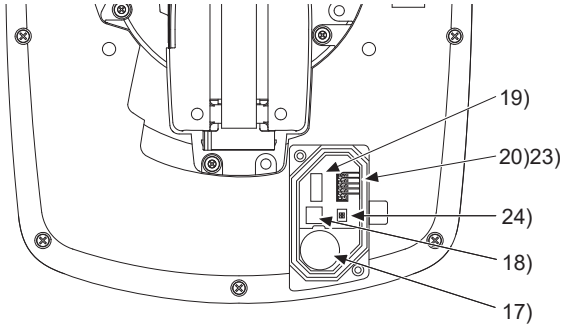

*1 Do not loosen or remove the two screws.

For the names of parts, refer to the following.

☞ Page 140 Part names and settings of GT25HS-V

Top Face (Interface)

Interface environmental protection cover closed

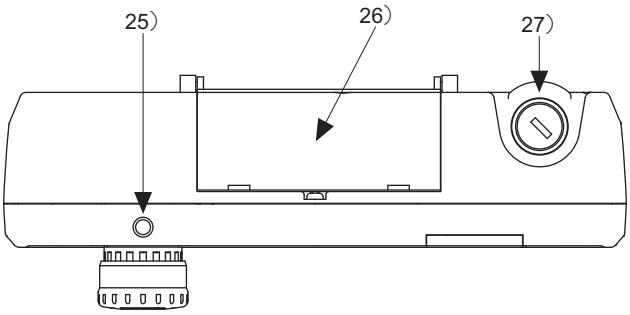

Interface environmental protection cover opened

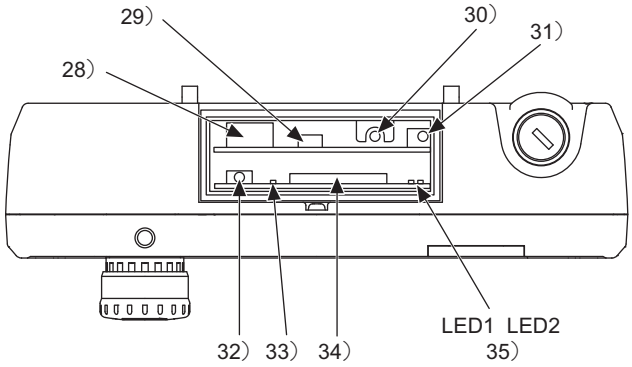

For the names of parts, refer to the following.

☞ Page 140 Part names and settings of GT25HS-V

GT2505HS-V

Front Panel

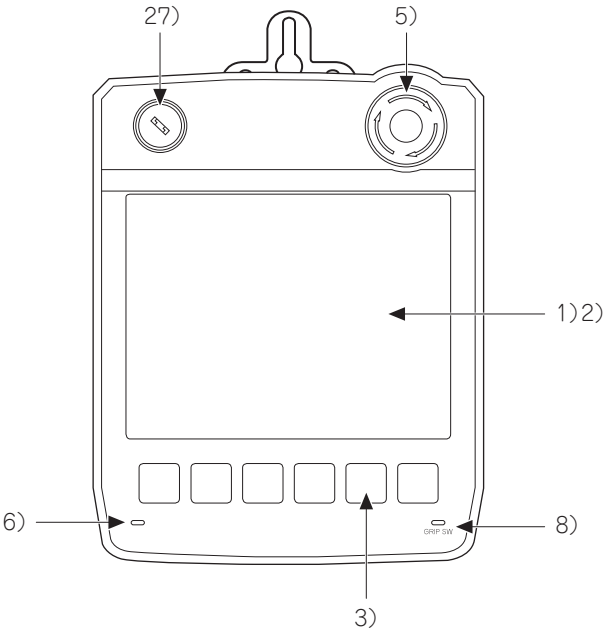

For the names of parts, refer to the following.

☞ Page 140 Part names and settings of GT25HS-V

Back Panel

Environmental protection back cover closed

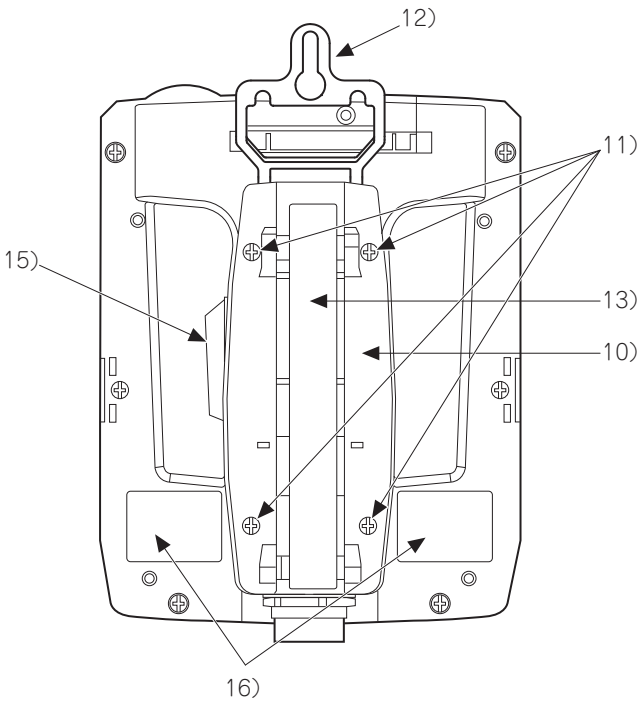

Environmental protection back cover opened

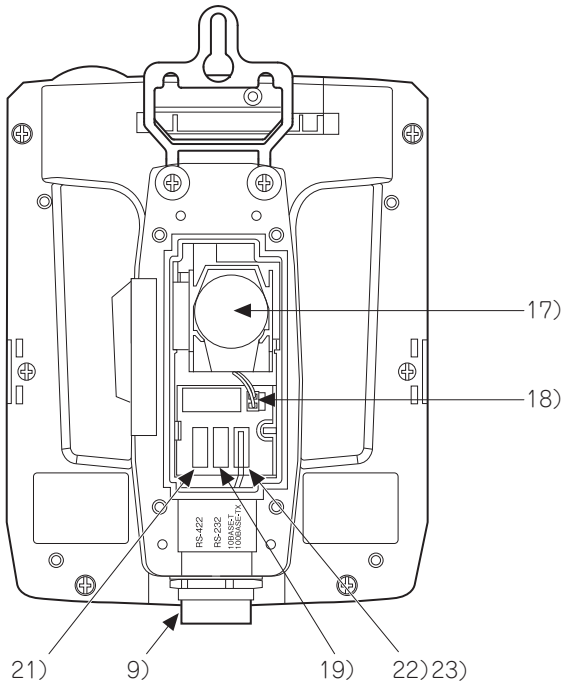

*1 Do not loosen or remove the two screws.

For the names of parts, refer to the following.

☞ Page 140 Part names and settings of GT25HS-V

Top Face (Interface)

Interface environmental protection cover closed

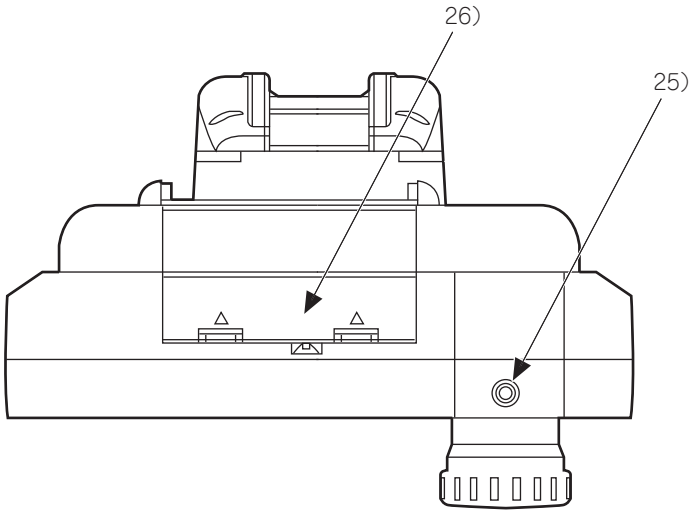

Interface environmental protection cover opened

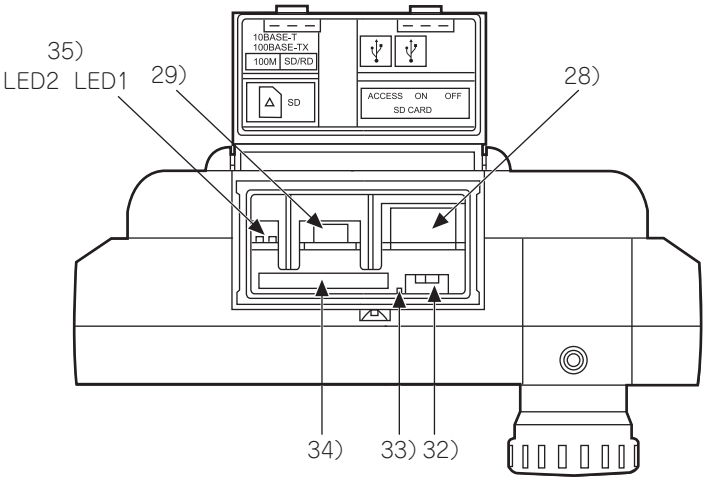

For the names of parts, refer to the following.

☞ Page 140 Part names and settings of GT25HS-V

Part names and settings of GT25HS-V

No.	Name	Description
1)	Display section	Displays the utility and the user-created screen.
2)	Touch panel	For operating the touch switches in the utility and the user-created screen
3)	Operation switch (6 switches)	Switch for external direct wiring (independent contact)
4)	Operation switch name sheet installation place	Place (concave shape) where the operation switch name sheet (Insert into the space from a transverse direction) is installed. For the details, refer to the following. ☞ Page 353 Operation switch name sheet creation (GT2506HS-V)
5)	Emergency stop switch	Switch for external direct wiring (independent contact)
6)	POWER LED	Lit in blue: Power is properly supplied. Lit in orange: Screen saving Blinks in orange and blue: Backlight failure Not lit: Power is not supplied.
7)	Display LED for operation switch (6 LEDs)	Display LED for operation switch (green) (lighting control from display section)
8)	Display LED for grip switch	Display LED for grip switch (green) (lighting control from display section)
9)	External interface connector	• GT2506HS-V For external cable connection (for PLC, switch and power supply external wiring) (Connector shape: square 42 pins, male) • GT2505HS-V For connecting an external cable to a PLC, switch, or power supply (Connector shape: Round 37 pins, male)
10)	Environmental protection back cover	• GT2506HS-V Opened and closed when the PLC communication type is changed (RS-422/485 RS-232,before shipping: RS-422/485), or the battery is replaced. • GT2505HS-V Opened and closed when the PLC communication type is changed among Ethernet, RS-422, and RS-232 (factory default: Ethernet), or when the battery is replaced.
11)	Environmental protection back cover screw	For opening and closing the environmental protection back cover (drop prevention screw)
12)	Hook for hanging on walls	Hook when the Handy GOT is used hanging on walls.
13)	Hand strap	Used to hold the Handy GOT in hand by putting a hand under the strap. Length adjustable.
14)	Grip angle changing screw	Used when changing the angle of the grip. (5, M4 screw) The angle of the grip can be set either to the standard angle (as before shipping) or 15 degrees to the right.
15)	Grip switch	Switch for external direct wiring (independent contact)
16)	Rating plate	—
17)	Battery (inside the cover)	For backing up clock data, system log data, and buffering data
18)	Connector for battery connection (inside the cover)	For battery connection
19)	RS-232 connector	Connector for PLC communication using RS-232 For the pin layout of the connector, refer to the following. 📖GOT2000 Series Handy GOT Connection Manual For GT Works3 Version1
20)	RS-422/485 connector	Connector for PLC communication using RS-422/485 For the pin layout of the connector, refer to the following. 📖GOT2000 Series Handy GOT Connection Manual For GT Works3 Version1
21)	RS-422 connector	For communicating with a PLC using RS-422 For the pin layout of the connector, refer to the following. 📖GOT2000 Series Handy GOT Connection Manual For GT Works3 Version1
22)	Ethernet connector	For communicating with a PLC using Ethernet
23)	Cable connector for PLC communication	Interface cable connector for PLC communication • GT2506HS-V Connector for either 19) or 20) and for selection of the PLC communication type. (Connected to RS-422/485 before shipping.) • GT2505HS-V Connect this connector to one of the above connectors (19), 21), or 22)), and select a PLC communication type. (Connected to the Ethernet connector at factory default.)

No.	Name	Description
24)	Terminating resistor setting switch	For switching the RS-422/485 communication interface terminating resistor (Set to Disable before shipping) Terminating resistor setting switch enlarged view 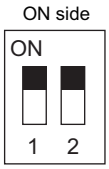 Terminating resistor / Switch No. 1 / Switch No. 2 Enable: ON / ON Disable: OFF / OFF Set to “Disable” before shipping
25)	Emergency stop switch guard cover installing hole	For installing an emergency stop switch guard cover (option)
26)	Interface environmental protection cover	• GT2506HS-V Opened and closed to use the USB port, SD card, S.MODE switch, or reset switch. • GT2505HS-V Opened and closed to use the USB port or an SD card.
27)	Keylock switch (2-position switch)	Switch for external direct wiring (independent contact)
28)	USB interface (Host)	For data transfer, data storage (connector type: USB-A)
29)	USB interface (Device)	For PC connection (connector type: USB Mini-B)
30)	Reset switch	Switch for resetting the hardware
31)	S.MODE switch (OS install switch)	Switch used for OS installation at GOT startup.
32)	SD card access switch	For enabling or disabling the access to the SD card when the SD card is inserted/removed to/ from the Handy GOT ON: SD card access allowed (The SD card cannot be removed.) OFF: SD card access prohibited (The SD card can be removed.)
33)	SD card access LED	ON: SD card installed Blink: SD card accessed OFF: SD card not installed or SD card installed but removal possible
34)	SD card interface	For installing an SD card
35)	Ethernet communication status LED	LED1: ON during data transfer or reception, LED2: ON during 100 Mbps transmission

4.6 GT23

GT2310-V, GT2308-V

Example) GT2310-VTBA

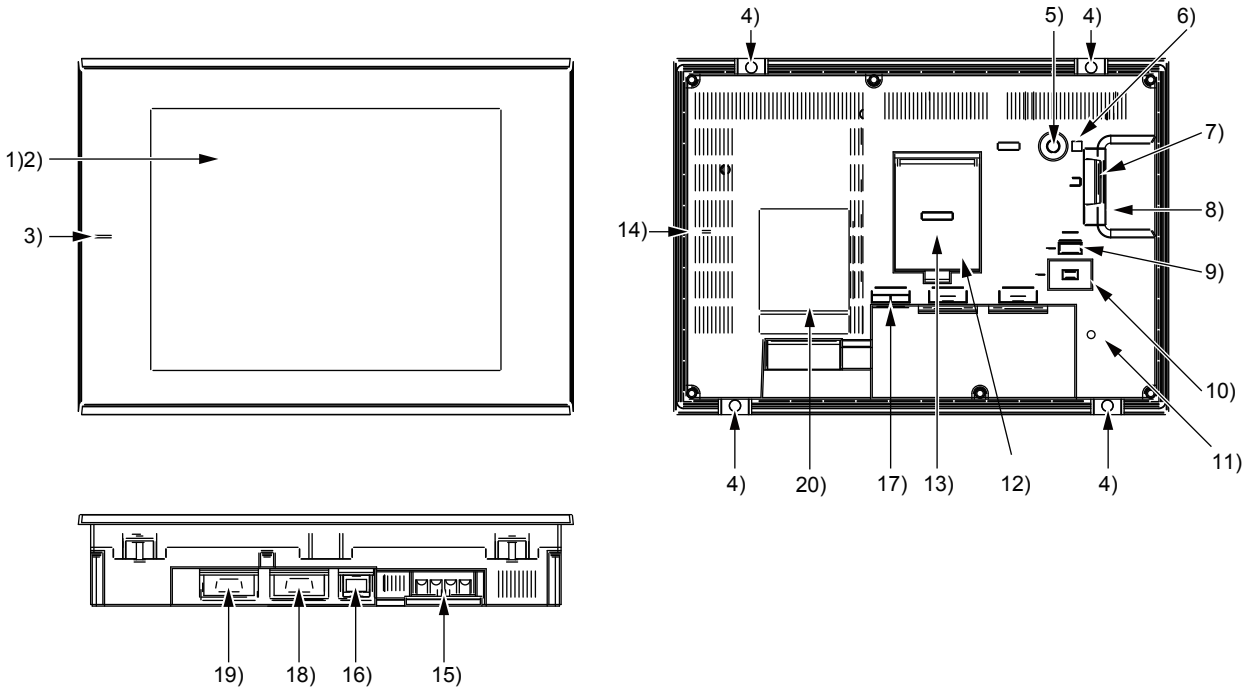

For the names of parts, refer to the following.

☞ Page 143 Part names and settings of GT23

Part names and settings of GT23

No.	Name	Description
1)	Display section	Displays the utility and the user-created screen.
2)	Touch panel	For operating the touch switches in the utility and the user-created screen
3)	POWER LED	Lit in blue: Power is properly supplied. Lit in orange: Screen saving Blinks in orange and blue: Backlight failure Not lit: Power is not supplied.
4)	Unit installation fitting	Mounting fixtures for fixing the GOT to the control panel
5)	S.MODE switch	Used for OS installation at the GOT startup
6)	SD card access LED	ON: SD card installed Blink: SD card accessed OFF: SD card not installed or SD card installed but removal possible
7)	SD card interface (inside the cover)	For installing an SD card
8)	SD card cover	Has the function to switch the access to the SD card between enabled and disabled states. When the cover is opened: Access prohibited When the cover is closed: Access allowed
9)	USB interface (Host)	For connecting a USB mouse, a USB keyboard, or a USB barcode reader, and transferring or saving data (Connector shape: TYPE-A)
10)	USB interface (Device)	For connecting a personal computer (Connector shape: Mini-B)
11)	Cable clamp mounting hole	Cable clamp mounting hole as a precaution against a disconnection of the USB cable
12)	Terminating resistor setting switch (inside the cover)	Switches the terminating resistor for the RS-422/485 communication port between used and unused states (initial setting (unused))
13)	Battery (inside the cover)	Space for housing the battery
14)	Vertical installation arrow mark	For the vertical installation, install the GOT so that the arrow points upward.
15)	Power terminal	Power input terminal, LG terminal, FG terminal
16)	Ethernet interface	For communicating with a controller or connecting a personal computer (Connector shape: RJ45 (modular jack))
17)	Ethernet communication status LED	SD/RD LED ON: Data sent or received SD/RD LED OFF: Data not sent or received SPEED LED ON: Communicating at 100 Mbps SPEED LED OFF: Communicating at 10 Mbps or disconnected
18)	RS-232 interface	For communicating with a controller (connector shape: D-sub 9-pin (male), #4-40UNC inch screw thread) For the pin layout of the connector, refer to the following. GOT2000 Series Connection Manual (Mitsubishi Electric Products) For GT Works3 Version1
19)	RS-422/485 interface	For communicating with a controller (connector shape: D-sub 9-pin (female), M2.6 metric screw thread) For the pin layout of the connector, refer to the following. GOT2000 Series Connection Manual (Mitsubishi Electric Products) For GT Works3 Version1
20)	Rating plate	—

4.7 GT21

GT2107-WTBD, GT2107-WTSD

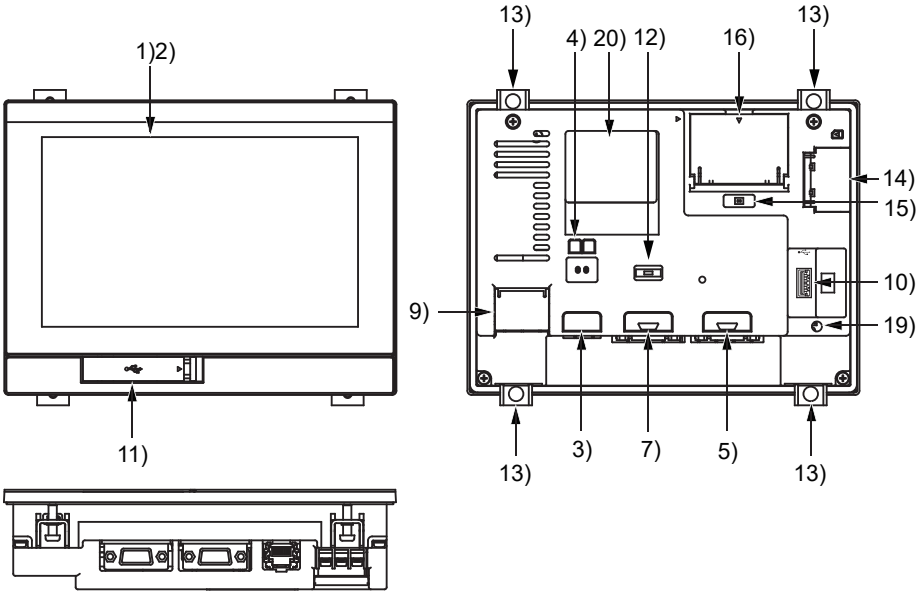

For the names of parts, refer to the following.

☞ Page 148 Part names and settings of GT21

GT2105-QTBDS, GT2105-QMBDS

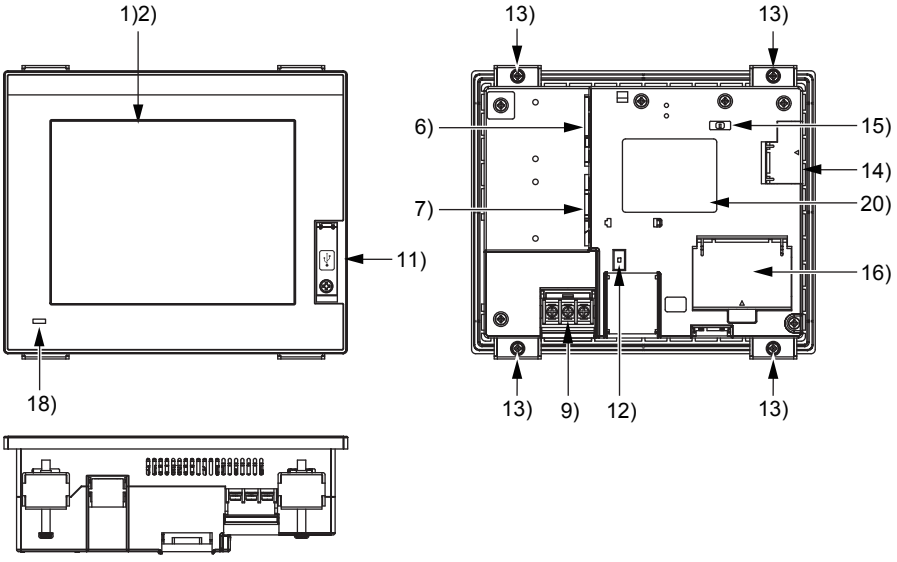

For the names of parts, refer to the following.

☞ Page 148 Part names and settings of GT21

GT2104-RTBD

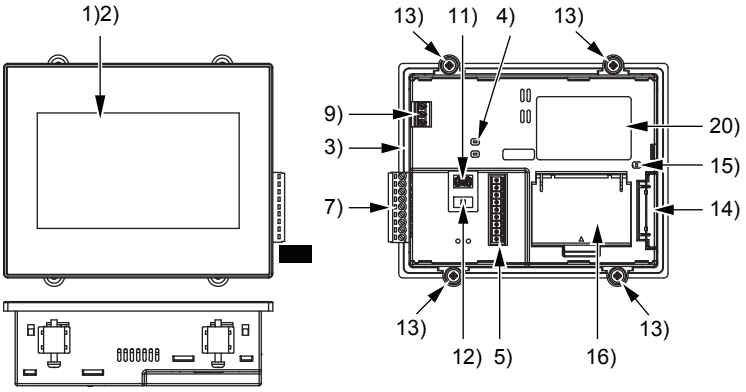

For the names of parts, refer to the following.

☞ Page 148 Part names and settings of GT21

GT2104-PMBD

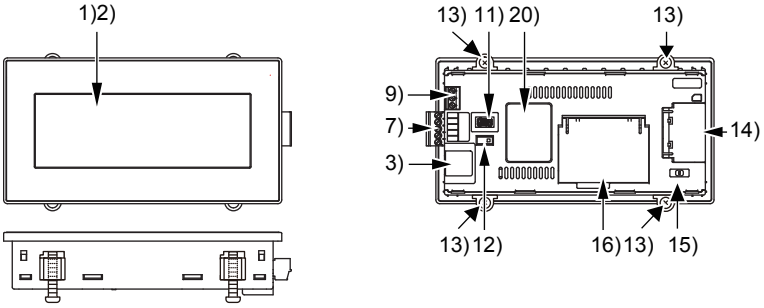

For the names of parts, refer to the following.

☞ Page 148 Part names and settings of GT21

GT2104-PMBDS

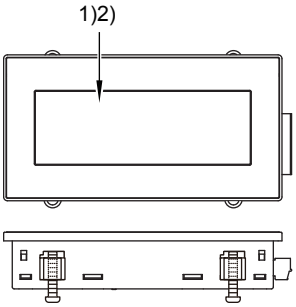

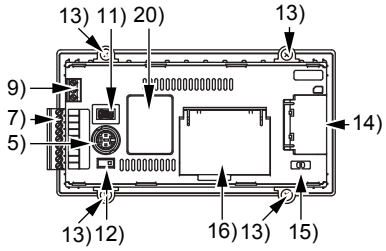

For the names of parts, refer to the following.

☞ Page 148 Part names and settings of GT21

GT2104-PMBDS2

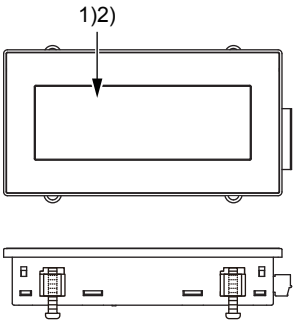

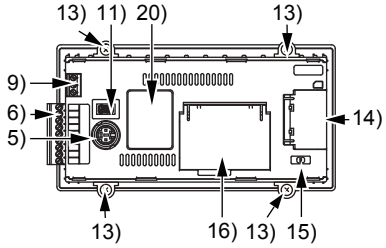

For the names of parts, refer to the following.

☞ Page 148 Part names and settings of GT21

GT2104-PMBLS

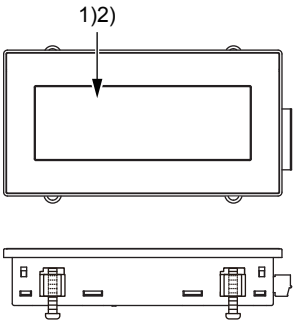

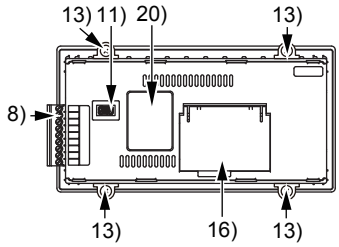

For the names of parts, refer to the following.

☞ Page 148 Part names and settings of GT21

GT2103-PMBD

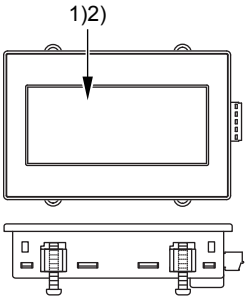

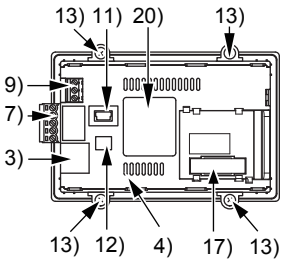

For the names of parts, refer to the following.

☞ Page 148 Part names and settings of GT21

GT2103-PMBDS

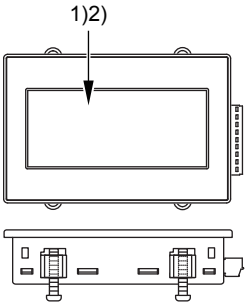

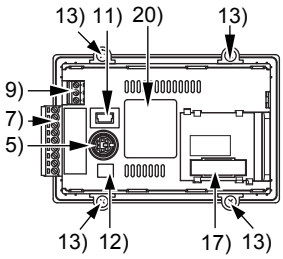

For the names of parts, refer to the following.

☞ Page 148 Part names and settings of GT21

GT2103-PMBDS2

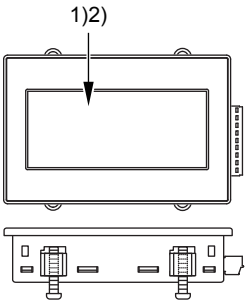

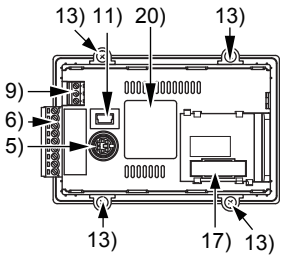

For the names of parts, refer to the following.

☞ Page 148 Part names and settings of GT21

GT2103-PMBLS

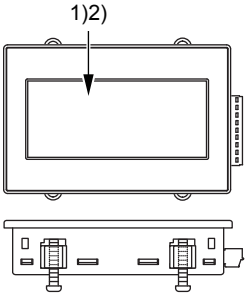

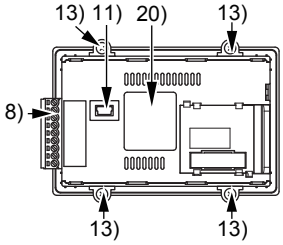

For the names of parts, refer to the following.

☞ Page 148 Part names and settings of GT21

Part names and settings of GT21

No.	Name	Description
1)	Display section	Displays the utility and the user-created screen.
2)	Touch panel	For operating the touch switches in the utility and the user-created screen
3)	Ethernet interface	For communicating with a controller or connecting a personal computer (Connector shape: RJ45 (modular jack))
4)	Ethernet communication status LED	SD/RD LED ON: Data sent or received SD/RD LED OFF: Data not sent or received SPEED LED ON: Communicating at 100 Mbps SPEED LED OFF: Communicating at 10 Mbps or disconnected
5)	RS-232 interface (Rear face)	For communicating with a controller or connecting a personal computer (FA transparent function) Connector shape is different depending on the model of the GT21. • GT2107-W: D-sub 9-pin (male), #4-40UNC inch screw thread • GT2104-R: 9-pin connector terminal block • GT2104-P: MINI-DIN 6-pin • GT2103-P: MINI-DIN 6-pin For connecting multiple GOTs, a barcode reader, an RFID, or a serial printer For the pin layout of the connector, refer to the following. 📖GOT2000 Series Connection Manual (Mitsubishi Electric Products) For GT Works3 Version1 However, the pin layout of the MINI-DIN 6-pin connector for the GT2104-P and GT2103-P is not disclosed.
6)	RS-232 interface (Side face)	For communicating with a controller or connecting a personal computer (FA transparent function) Connector shape is different depending on the model of the GT21. • GT2105: D-sub 9-pin (male), #4-40UNC inch screw thread • GT2104-P: 9-pin connector terminal block • GT2103-P: 9-pin connector terminal block For connecting multiple GOTs, a barcode reader, an RFID, or a serial printer For the pin layout of the connector, refer to the following. 📖GOT2000 Series Connection Manual (Mitsubishi Electric Products) For GT Works3 Version1
7)	RS-422/485 interface	For communicating with a controller Connector shape is different depending on the model of the GT21. • GT2107-W, GT2105: D-sub 9-pin (female), M2.6 metric screw thread • GT2104-R: 9-pin connector terminal block • GT2104-P: 9-pin or 5-pin connector terminal block • GT2103-P: 9-pin or 5-pin connector terminal block For the pin layout of the connector, refer to the following. 📖GOT2000 Series Connection Manual (Mitsubishi Electric Products) For GT Works3 Version1
8)	RS-422 interface	For communicating with a controller (9-pin connector terminal block)
9)	Power terminal	Power input terminal, FG terminal
10)	USB interface (Host)	For connecting a USB mouse, a USB keyboard, or a USB barcode reader, and transferring or saving data (Connector shape: USB-A)
11)	USB interface (Device)	For connecting a personal computer (Connector shape: Mini-B)
12)	Terminating resistor setting switch	Switches the terminating resistor for the RS-422/485 communication port among 330 Ω, 110 Ω, and OPEN
13)	Unit installation fitting	Mounting fixtures for fixing the GOT to the control panel
14)	SD card interface (inside the cover)	For installing an SD card
15)	SD card access LED	ON: SD card installed Blink: SD card accessed OFF: SD card not installed or SD card installed but removal possible
16)	Battery (inside the cover)	Space for housing the battery
17)	SD card unit connector (inside the cover)	For mounting the SD card unit
18)	POWER LED	Lit in blue: Power is properly supplied. Lit in orange: Screen saving Blinks in orange and blue: Backlight failure Not lit: Power is not supplied.
19)	Cable clamp mounting hole	Cable clamp mounting hole as a precaution against a disconnection of the USB cable
20)	Rating plate	—

5 EMC DIRECTIVE AND LOW VOLTAGE DIRECTIVE

- Page 149 Overview
- Page 151 EMC Directive Requirements
- Page 169 Low Voltage Directive Requirements

5.1 Overview

For electromagnetic compatibility (EMC) and electrical safety, regulatory standards are established in each country. Especially, for the products to be sold in European countries, conformance to the EMC Directive, which is one of the European Directives, has been mandatory as the EMC standards since 1996. In addition, conformance to the Low Voltage Directive, another European Directive, has also been mandatory as the electrical safety standards since 1997.
In European countries, if a product meets the requirements of the EMC Directive or the Low Voltage Directive, the product's manufacturer must declare conformity of the product and affix the CE mark to the product. In some countries or regions other than European countries, the product's manufacturer also must declare conformity of the product and affix a designated mark to the product (example: UKCA mark in the UK).
This section describes the EMC Directive and Low Voltage Directive as examples for conformance to EMC and electrical safety standards. EMC and electrical safety standards in each country are stipulated to be consistent with the corresponding international standards. When the requirements are consistent with the same standards, common measures are taken to conform to the standards in different countries. For the EMC Directive, regulatory compliance with equivalent EMC standards are required for example in the UK and Korea. For the Low Voltage Directive, regulatory compliance with equivalent electrical safety standards are required for example in the UK.

Authorized representative in the EU and the UK

The authorized representative in the EU and the UK is shown below.
Company name: Mitsubishi Electric Europe BV
Address: Mitsubishi-Electric-Platz 1, 40882 Ratingen, Germany

Conforming standards in the EMC Directive

The GOT complies with the following standards in the EMC Directive.

Applied standard	Test standard	Test details	Standard value
EN61131-2 : 2007	CISPR16-2-3 Radiated noise *1*2	Test for measuring electromagnetic emissions from the product	• 30 MHz to 230 MHz QP: 30 dBμV/m (measured at 30 m) *3*4 • 230MHz to 1000MHz QP: 37 dBμV/m (measured at 30 m) *3*4
	CISPR16-2-1 Conducted noise *1*2	Test for measuring electromagnetic emissions from the product to the power cables	• 150kHz to 500kHz QP: 79dB, Mean: 66dB *3 • 500kHz to 30MHz QP: 73dB, Mean: 60dB *3
	IEC61000-4-2 Electrostatic immunity *1*2	Immunity test in which static electricity is applied to the cabinet of the equipment	• Contact discharge: ±4 kV • Aerial discharge: ±8 kV
	IEC61000-4-3 Radiated electromagnetic field, amplitude modulation *1*2	Immunity test in which an electric field is applied to the product	80 MHz to 1000 MHz: 10 V/m 1.4GHz to 2GHz: 3V/m 2.0GHz to 2.7GHz: 1V/m (80% amplitude modulation at 1 kHz)
	IEC61000-4-4 Fast transient burst noise *1*2	Immunity test in which burst noise is applied to the power cables and the signal lines	Power cable: 2kV Digital I/O: 1kV Analog I/O: 1kV Signal cable: 1kV
	IEC61000-4-5 Surge immunity *1*2	Immunity test in which lightening surge is applied to the product	• AC power type Power cable (between cable and ground): ±2 kV Power cable (between cables): ±1 kV Data communication port: ±1 kV • DC power type Power cable (between cable and ground): ±0.5kV Power cable (between cables): ±0.5kV Data communication port: ±1 kV
	IEC61000-4-6 Conducted RF immunity *1*2	Immunity test in which a noise inducted on the power cable and the signal lines is applied	Power cable: 10V Data communication port: 10 V
	IEC61000-4-8 Power supply frequency magnetic field immunity *1*2	Test for checking normal operations under the circumstance exposed to the ferromagnetic field noise of the power supply frequency (50/60 Hz)	30 A/m
EN61131-2 : 2007	IEC61000-4-11 Instantaneous power failure and voltage dips immunity	Test for checking normal operations at instantaneous power failure	• AC power type 0.5 cycle 0% (Interval 1 second to 10 seconds) 250/300 cycle 0% 10/12 cycle 40% 25/30 cycle 70%

*1 The GOT is an open type device (designed to be integrated in equipment).
Make sure to install the GOT on a control panel.
This test item is conducted in the condition where the GOT is installed on a control panel and combined with the MITSUBISHI ELECTRIC PLC.

*2 The length of a sound output cable must be 30 m or less.

*3 QP: Quasi-peak value, Mean: Average value

*4 This test item is conducted in the following conditions.
30 MHz to 230 MHz
QP: 40 dBμV/m (measured at 10 m)
230MHz to 1000MHz
QP: 47 dBμV/m (measured at 10 m)

Conforming standards in the Low Voltage Directive

The GOT complies with the following standards in the Low Voltage Directive.

EN61131-2: Programmable controllers - Equipment requirements and tests

5.2 EMC Directive Requirements

The EMC Directive requires the following.
Strong electromagnetic waves are not emitted to the outside.: Emission (Electromagnetic interference)
The product is not affected by the electromagnetic waves from the outside.: Immunity (Electromagnetic sensitivity)
To comply with the EMC Directive, this section explains the precautions for configuring equipment integrating the GOT.
The data described herein are produced with our best, based on the regulation requirements and standards obtained by Mitsubishi Electric. However, the data do not guarantee that the whole equipment produced according to the data comply with the above directive.
The manufacturer of the equipment must determine the method to comply with the EMC Directive and conformance to the directive.

Installing the GOT on the control panel

The GOT is an open type device (designed to be integrated in equipment).
Make sure to install the GOT in a control panel.
This restriction ensures safety and also has a large effect of suppressing noise generated from the GOT by using the control panel.

Control panel

The control panel must be conductive.
When fixing a top or bottom plate of the control panel with bolts, do not coat the plate and bolt surfaces so that they contact each other.
Connect the door and the box using a thick grounding cable to ensure the low impedance under high frequency.
To ensure electric conductivity in the large area as much as possible between an inner plate and the control panel, do not coat the fixing bolt area of the inner plate and the control panel.
Ground the control panel using a thick grounding cable to ensure the low impedance under high frequency.
The diameter of cable holes on the control panel must be 10 cm or less.
If the diameter of the hole is 10 cm or more, radio waves may leak.
To reduce the chance of radio waves leaking out, ensure that the space between the control panel and its door is as small as possible.
Pasting the following EMI gasket directly on the painted surface seals the space, reducing the leak of electric waves.

Manufacturer	Series name	Contact
KITAGAWA INDUSTRIES CO., LTD.	RFSG series (Recommended Product)	+81-587-34-3561

Our test has been carried out on a panel having the damping characteristics of 37 dB max. and 30 dB mean (measured by 3m method with 30 MHz to 300 MHz).

Connection of power and ground cables

Ground the GOT and connect power supply cables as shown below.

■Wiring the ground cable

Provide a ground point near the GOT. Short-circuit the line ground terminal (LG terminal) and the frame ground terminal (FG terminal) of the GOT, and ground them with the thickest and shortest cable as possible.

■Ground cable length

The ground cable length must be 30 cm or shorter.
The LG and FG terminals pass the noise generated in the GOT system to the ground.
Therefore, ensure an impedance as low as possible.
Since the ground cables relieve the noise, the cables themselves carry a large noise.
Thus, short wiring prevents the cable from acting as an antenna.
(A long conductor is an antenna radiating noise more efficiently.)

■Treatment of the power cable and the ground cable

Twist the ground cable led from the ground point with the power cable.

Twisting with the ground cable relieves more noise from the power cable to the ground.

When a noise filter is installed to the power cable, twisting the power cable and the ground cable may not be required.

Installing a noise filter (power supply line filter)

A noise filter is a part to effectively reduce conducted noise.

Although installing a noise filter on the power supply line is not mandatory, doing so can suppress a larger amount of noise.

The noise filter is effective to reduce conducted noise in the band of 10 MHz or less.

Use a noise filter equivalent to the following noise filters (double π-type filters).

Model	Manufacturer	Rated current	Rated voltage
FN343-3/05	SCHAFFNER	3A	250V
FN660-6/06	SCHAFFNER	6A	
RSHN-2003	TDK	3A	

Precautions

The following shows the precautions for installing a noise filter.

■Prohibition of bundling cables

Do not bundle the input and output cables of the noise filter.

Bundling the cables inducts the noise from the output-side cable into the input-side cable where noise has been eliminated by the noise filter.

Wire the input and output cables separately.

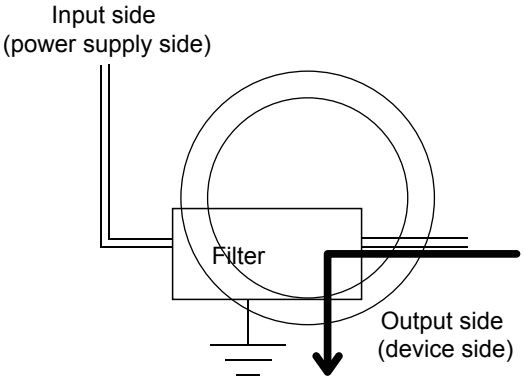

Bundling the input and output cables inducts noise.

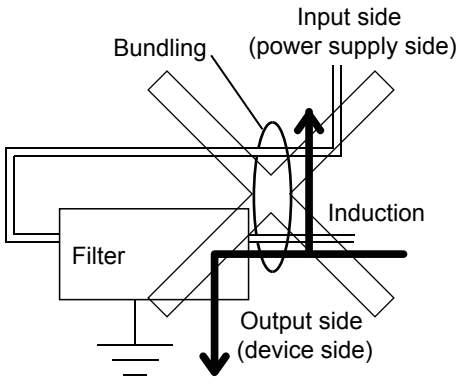

■Grounding the noise filter

Connect the ground terminal of the noise filter to the control panel with a short cable as much as possible (approximately 10 cm).

System configuration

You can also check the EMC Directive compliance status of the GOT2000 series at the Mitsubishi Electric Factory Automation Global Website.
For the latest information, go to the Mitsubishi Electric Factory Automation Global Website.
www.MitsubishiElectric.com/fa

GOT

Use the following GOTs having a CE mark on the rating plate.
For how to check the hardware version of the GOT, refer to the following.
☞ Page 434 Confirming of Versions and Conforming Standards
○: Compliant ×: Not compliant

Product name	Model	Hardware version (Manufacture year and month)	EMC Directive
GT2715	GT2715-XTBA	Version A or later (April 2014)	○
	GT2715-XTBD		
GT2712	GT2712-STBA	Version A or later (August 2013)	○
	GT2712-STBD		
	GT2712-STWA		
	GT2712-STWD		
GT2710	GT2710-STBA		
	GT2710-STBD		
	GT2710-VTBA		
	GT2710-VTBD		
	GT2710-VTWA		
	GT2710-VTWD		
GT2708	GT2708-STBA		
	GT2708-STBD		
	GT2708-VTBA		
	GT2708-VTBD		
GT2705	GT2705-VTBD	Version A or later (April 2015)	○
GT2512	GT2512-WXTBD	Version A or later (January 2021)	○
	GT2512-WXTSD		
	GT2512-STBA	Version A or later (October 2014)	
	GT2512-STBD		
	GT2512F-STNA	Version A or later (January 2016)	
	GT2512F-STND		
GT2510	GT2510-WXTBD	Version A or later (April 2017)	○
	GT2510-WXTSD		
	GT2510-VTBA	Version A or later (April 2014)	○
	GT2510-VTBD		
	GT2510-VTWA		
	GT2510-VTWD		
	GT2510F-VTNA	Version A or later (January 2016)	
	GT2510F-VTND		
GT2508	GT2508-VTBA	Version A or later (April 2014)	○
	GT2508-VTBD		
	GT2508-VTWA		
	GT2508-VTWD		
	GT2508F-VTNA	Version A or later (January 2016)	
	GT2508F-VTND		

Product name	Model	Hardware version (Manufacture year and month)	EMC Directive
GT2507	GT2507-WTBD	Version A or later (April 2017)	○
	GT2507-WTSD		
	GT2507T-WTSD	Version A or later (April 2018)	○
GT2505	GT2505-VTBD	Version A or later (August 2017)	○
	GT2505HS-VTBD	Version A or later (April 2018)	○
GT2506	GT2506HS-VTBD	Version A or later (August 2017)	○
GT2310	GT2310-VTBA	Version A or later (August 2013)	○
	GT2310-VTBD		
GT2308	GT2308-VTBA		
	GT2308-VTBD		
GT2107	GT2107-WTBD	Version A or later (February 2017)	○
	GT2107-WTSD		
GT2105	GT2105-QTBDS	Version B or later (May 2016)	○
	GT2105-QMBDS		
GT2104	GT2104-RTBD	Version B or later (March 2015)	○
	GT2104-PMBD	Version B or later (October 2015)	○
	GT2104-PMBDS		
	GT2104-PMBDS2	Version B or later (April 2016)	○
	GT2104-PMBLS		
GT2103	GT2103-PMBD	Version B or later (October 2014)	○
	GT2103-PMBDS		
	GT2103-PMBDS2	Version B or later (April 2015)	○
	GT2103-PMBLS		

Connection type

The following table lists the connection types compliant with the EMC Directive.

○: Compliant ×: Not compliant

Connection type *1	GT27	GT25	GT23	GT21
Ethernet connection	○	○	○	○
Direct CPU connection (serial)	○	○	○	○
Serial communication connection	○	○	○	×
Bus connection	○	○ *3	×	×
MELSECNET/H connection (PLC to PLC network)	○	○ *3	×	×
CC-Link IE TSN connection	○	○ *3	×	×
CC-Link IE Controller Network connection	○	○ *3	×	×
CC-Link IE Field Network connection	○	○ *3	×	×
CC-Link connection (Intelligent device station)	○	○ *3	×	×
CC-Link connection (Via G4)	×	×	×	×
GOT multi-drop connection	○	○ *5	○	○ *4
Other connections (Connection with non-Mitsubishi Electric PLC, microcomputer, inverter, temperature controller, servo amplifier, CNC, and MODBUS equipment) *2	○	○	○	○

*1 For the details of each connection type, refer to the following manual.
GOT2000 Series Connection Manual For GT Works3 Version1 that covers the controller used

*2 When connecting the GOT to other controllers such as a non-Mitsubishi Electric PLC, fabricate connection cables and configure the system following the EMC Directive specifications.
Page 167 Non-Mitsubishi Electric PLC, microcomputer, temperature controller, inverter, servo amplifier, CNC, MODBUS/RTU, and MODBUS/TCP connections

*3 Not available to GT25-W, GT2505-V and GT25HS-V.

*4 Not available to GT2104-PMBDS2, GT2104-PMBLS, GT2103-PMBDS2, and GT2103-PMBLS.

*5 Not available to GT25HS-V.

Point

Connected devices

When connecting the GOT to a non-Mitsubishi Electric PLC, refer to the manual about the EMC Directive compliance of the connected device (such as a PLC and a microcomputer).

The GT25HS-V is compliant with the EMC Directive only when it is connected via a connector conversion box using an applicable connection type mentioned above.

Communication unit

To comply with the EMC Directive, use the following communication units.

When any other than the following communication units is used, the GOT does not comply with the EMC Directive.

Connection type	Communication unit	Hardware version (Manufacture year and month)
Ethernet connection	GOT Ethernet interface	-
	GT25-J71E71-100	Version A or later (September 2016)
Direct CPU connection (serial)	GOT RS-232 interface	-
	GOT RS-422/485 interface	-
	GT15-RS2-9P GT15-RS4-9S	Version D or later (January 2006)
Serial communication connection	GOT RS-232 interface	-
	GOT RS-422/485 interface	-
	GT15-RS2-9P GT15-RS4-9S	Version D or later (January 2006)
Bus connection	GT15-QBUS	Version D or later (October 2005)
	GT15-QBUS2 GT15-ABUS GT15-ABUS2	Version C or later (October 2005)
	GT15-75QBUSL GT15-75QBUS2L GT15-75ABUSL GT15-75ABUS2L	Version G or later (March 2005)
MELSECNET/H connection (PLC to PLC network)	GT15-J71LP23-25 GT15-J71BR13	Version C or later (September 2006)
CC-Link IE TSN connection	GT25-J71GN13-T2	Version A or later (June 2019)
CC-Link IE Controller Network connection	GT15-J71GP23-SX	Version A or later (December 2007)
CC-Link IE Field Network connection	GT15-J71GF13-T2	Version A or later (April 2011)
CC-Link connection (Intelligent device station)	GT15-J61BT13	Version C or later (September 2006)
Non-Mitsubishi Electric PLC connection	GOT RS-232 interface	-
	GOT RS-422/485 interface	-
	GT15-RS2-9P GT15-RS4-9S	Version D or later (January 2006)
Microcomputer connection (Ethernet)	GOT Ethernet interface	-
Microcomputer connection (Serial)	GOT RS-232 interface	-
	GOT RS-422/485 interface	-
	GT15-RS2-9P GT15-RS4-9S	Version D or later (January 2006)
Temperature controller connection	GOT RS-232 interface	-
	GOT RS-422/485 interface	-
	GT15-RS2-9P GT15-RS4-9S GT15-RS4-TE	Version D or later (January 2006)
Inverter connection	GOT RS-422/485 interface	-
	GT15-RS4-9S	Version D or later (January 2006)

Connection type	Communication unit	Hardware version (Manufacture year and month)
Servo amplifier connection	GOT RS-232 interface	-
	GOT RS-422/485 interface	-
	GT15-RS2-9P GT15-RS4-9S	Version D or later (January 2006)
CNC connection	GOT RS-232 interface	-
	GOT RS-422/485 interface	-
	GT15-RS2-9P GT15-RS4-9S	Version D or later (January 2006)
	GT15-J71LP23-25 GT15-J61BT13	Version C or later (September 2006)
	GOT Ethernet interface	-
MODBUS/RTU connection	GOT RS-232 interface	-
	GOT RS-422/485 interface	-
	GT15-RS2-9P, GT15-RS4-9S	Version D or later (January 2006)
MODBUS/TCP connection	GOT Ethernet interface	-

Option unit

To comply with the EMC Directive, use the following option units.

When any other than the following option units is used, the GOT does not comply with the EMC Directive.

Product name	Model	Hardware version (Manufacture year and month)
Multimedia unit	GT27-MMR-Z	Version A or later (August 2013)
Video/RGB input unit	GT27-V4R1-Z	Version A or later (August 2013), GT2715: Version B or later (April 2014) *1
Video input unit	GT27-V4-Z	
RGB input unit	GT27-R2	Version A or later (April 2015)
	GT27-R2-Z	Version A or later (August 2013), GT2715: Version B or later (April 2014) *1
RGB output unit	GT27-ROUT	Version A or later (April 2015)
	GT27-ROUT-Z	Version A or later (August 2013)
Printer unit	GT15-PRN	Version B or later (Feb 2006)
Digital video output unit	GT27-VHOUT	Version A or later (November 2018)
Sound output unit	GT15-SOUT	Version B or later (May 2007)
External I/O unit	GT15-DIO	Version B or later (May 2007)
	GT15-DIOR	Version A or later (July 2008)
SD card unit	GT21-03SDCD	- (October 2014)

*1 To use the unit on GT2715, the hardware version of the supplied GT16M-V4R1-Z/GT16M-V4-Z/GT16M-R2-Z and GT27-IF1000 must also be B or later.

Option

The following lists the options compliant with the EMC Directive.

○: Compliant ×: Not compliant

Product name	Model	Hardware version (Manufacture year and month)	EMC Directive
Connector conversion box	GT16H-CNB-42S	Version D or later (January 2006)	○
	GT16H-CNB-37S	-	×
	GT11H-CNB-37S	-	×

Cable

■MELSECNET/H (coaxial cable), and video connections

Use a double shielded coaxial cable.

The 5C-2V connector plug is applicable to the double shielded coaxial cable.

Connect the 5C-2V connector plug to the coaxial cable inside the double shielded coaxial cable.

Ground the shielded part outside the double shielded coaxial cable as shown in the following figure.

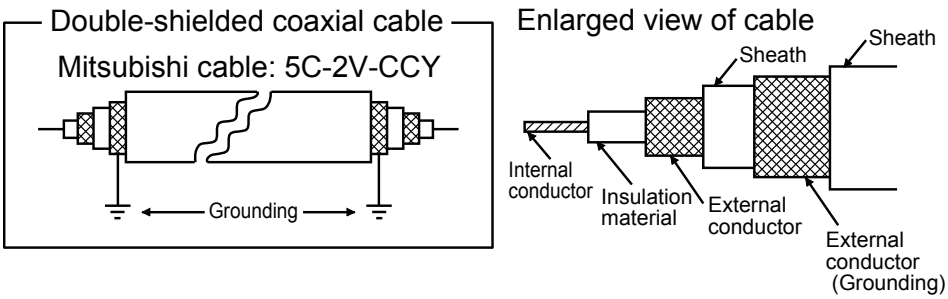

■CC-Link IE Field Network connection

Use the following cable dedicated to the CC-Link IE Field Network.

Manufacturer	Model
Mitsubishi Electric System & Service Co., Ltd.	SC-E5EW-S□M

■External cable

Use version C or later of GT11H-C□□-37P.

■Other connections

For the details of the cables used, refer to the following manual.

GOT2000 Series Connection Manual For GT Works3 Version1 that covers the controller used

Point

Fabricating cables

To comply with the EMC Directive, fabricate cables (including user-created cables).

For how to fabricate a cable, refer to the following.

GOT2000 Series Connection Manual For GT Works3 Version1 that covers the controller used

Connection of power cables and ground cables

Carry out wiring and connect the power and ground cables according to the following instruction.
By the different wiring or connection method, the system may not comply with EMC Directive.

Wiring method

As shown in the figure below, connect the power cable and the ground cable, and then attach a ferrite core (ZCAT3035-1330, manufactured by TDK Corporation) within the specified range.
GT23 does not need ferrite cores.
Make sure to ground the LG cable and FG cable.
For connection of power cables and ground cables, refer to the following.
☞ Page 151 Connection of power and ground cables
GT2705-VTBD, GT25-W, GT2505-VTBD, and GT21 do not have the LG ground terminal.

■100 V AC to 240 V AC GOT power supply section (GT27, GT25, GT23 only)

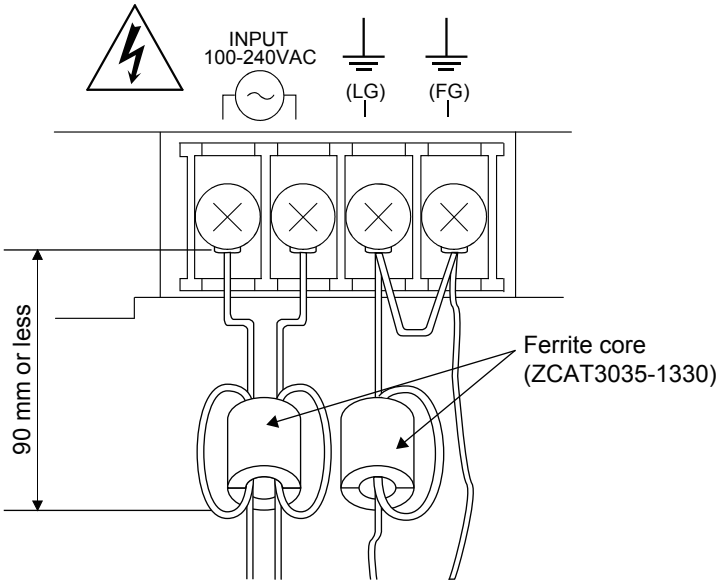

■24 V DC power supply section (GT27, GT25 except Handy GOT, and GT23 only)

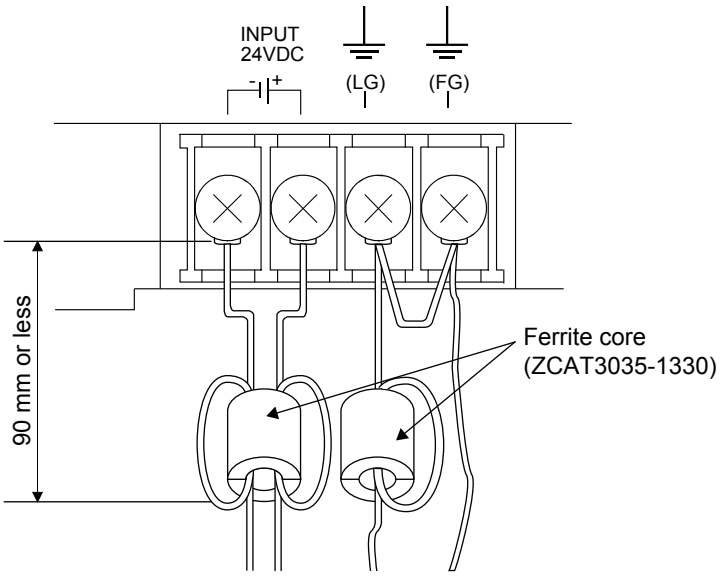

■24 V DC power supply section (Handy GOT only)

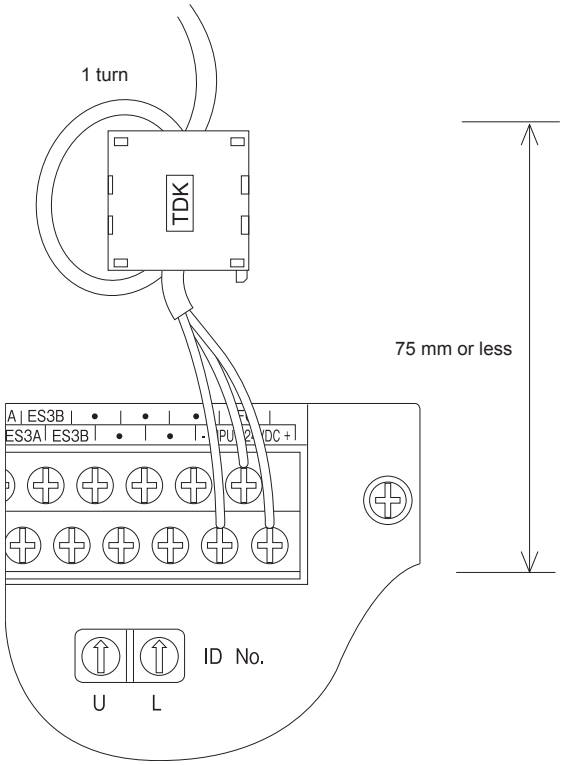

Fabricating a connection cable

Fabricate the cables used for the GOT by the methods as shown in this section.

The fabrication requires a ferrite core, cable clamp, and cable shielding materials.

The following products have passed the Mitsubishi Electric EMC Directive compliance test.

ZCAT3035-1330 ferrite core (TDK Corporation)

AD75CK-type cable clamp (Mitsubishi Electric Corporation)

Zipper tubing SHNJ type (Zippertubing (Japan),Ltd)

Ethernet connection

■Ethernet cable

Strip off the sheath at both ends of the cable as shown in the figure below to expose braided shield for grounding.

The braided shield sections are used for grounding with a cable clamp.

☞ Page 168 Grounding a cable

Connecting to the Ethernet interface of the GOT or the Ethernet communication unit (GT25-J71E71-100)

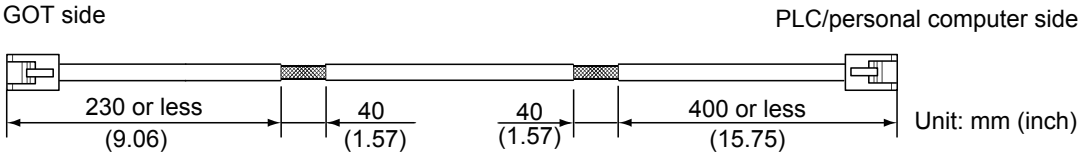

Connecting to the multimedia unit (GT27-MMR-Z)

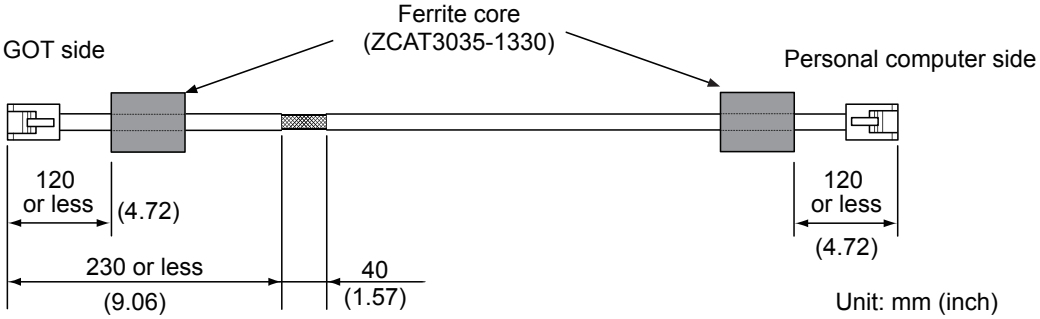

Direct CPU connection (serial)

■RS-232 cable and RS-422 cable

Install a ferrite core to the cable in the positions as shown in the figure below.

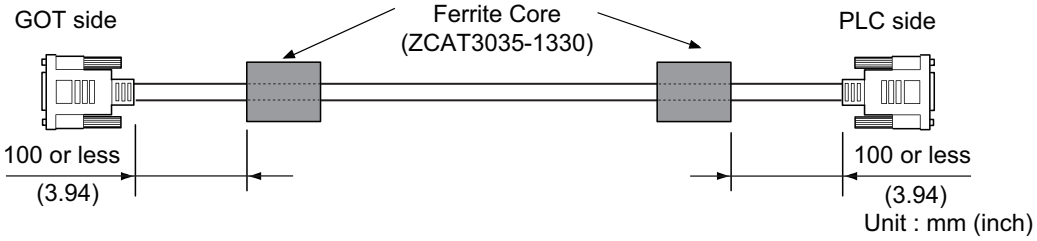

Serial communication connection

■RS-232 cable and RS-422 cable

Strip off the sheath at both ends of the cable as shown in the figure below to expose braided shield sections for grounding.
The braided shield sections are used for grounding with a cable clamp.
☞ Page 168 Grounding a cable

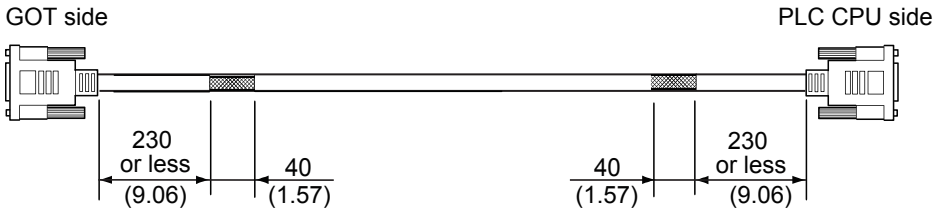

Unit: mm (inch)

Bus connection

■GT15-QC□B and GT15-QC□BS

Strip off the sheath at both ends of the cable as shown in the figure below to expose braided shield sections for grounding.
The braided shield sections are used for grounding with a cable clamp.
☞ Page 168 Grounding a cable

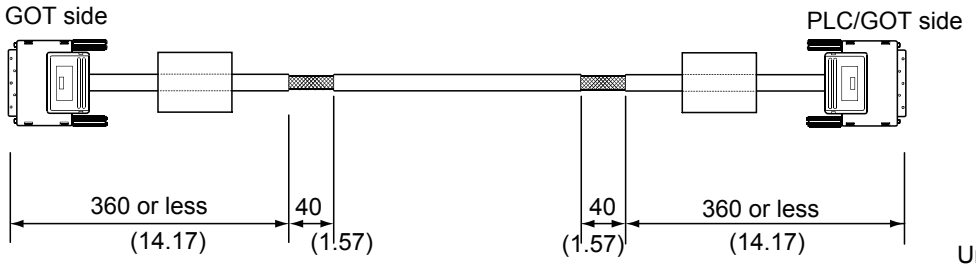

Unit: mm (inch)

■GT15-C□BS

1. Cut the ground cables from both ends of the cable to the length as shown in the figure below.
2. Install ferrite cores to the cable in the positions as shown in the figure below, and insert the ground cables through the ferrite cores.
3. Strip off the sheath at both ends of the cable as shown in the figure below to expose braided shield sections for grounding.

The braided shield sections are used for grounding with a cable clamp.
☞ Page 168 Grounding a cable

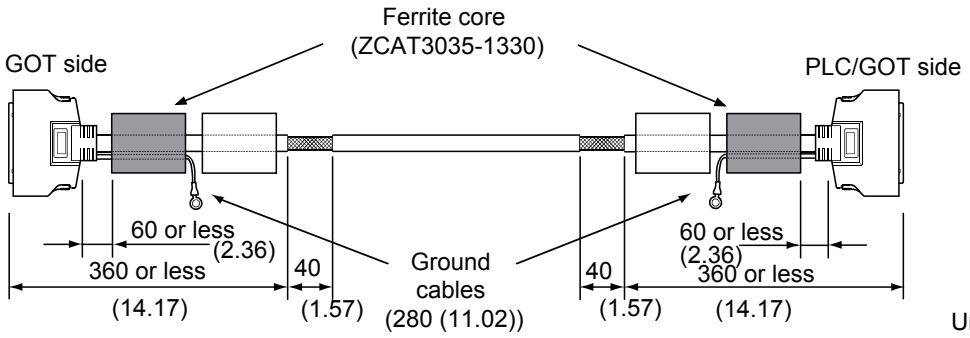

Unit: mm (inch)

■Other bus connection cables

1. Wrap the cable shielding material around the cable, and pull out the braided cables for grounding from the cable shielding material with the length as shown in the figure below.
2. Install ferrite cores to the cable in the positions as shown in the figure below, and insert the braided cable for grounding at the PLC side through the ferrite core.

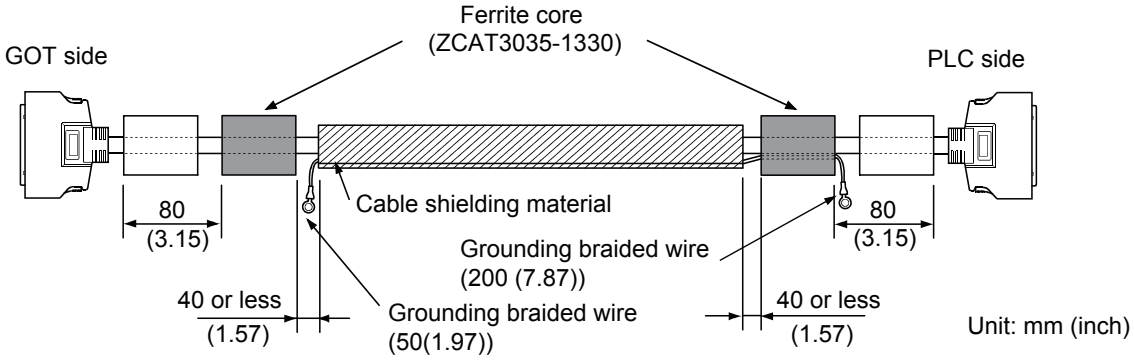

MELSECNET/H connection (PLC to PLC network) connection

■Coaxial cable

1. Strip off the sheath at both ends of the cable as shown in the figure below to expose outer braided shield for grounding.

The braided shield sections are used for grounding with a cable clamp.

☞ Page 168 Grounding a cable

2. Install a ferrite core to the cable in the positions as shown in the figure below.

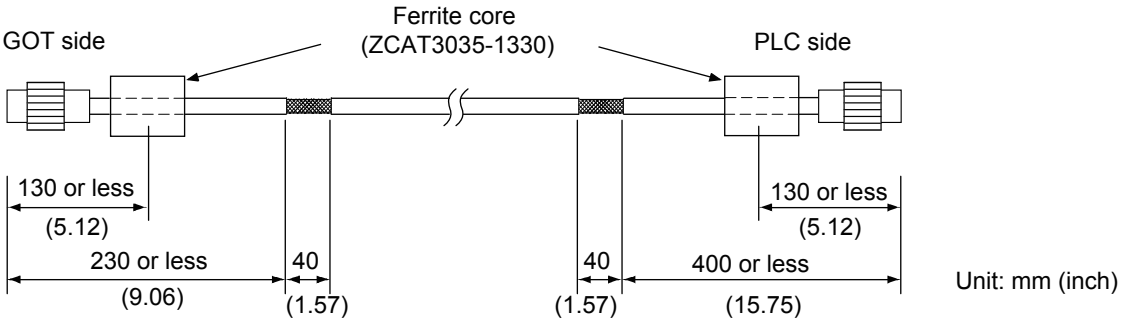

■Fiber-optic cable

Fabricating a cable is not required.

CC-Link IE TSN connection

Strip off the sheath at both ends of the cable as shown in the figure below to expose braided shield for grounding.
The braided shield sections are used for grounding with a cable clamp.
☞ Page 168 Grounding a cable

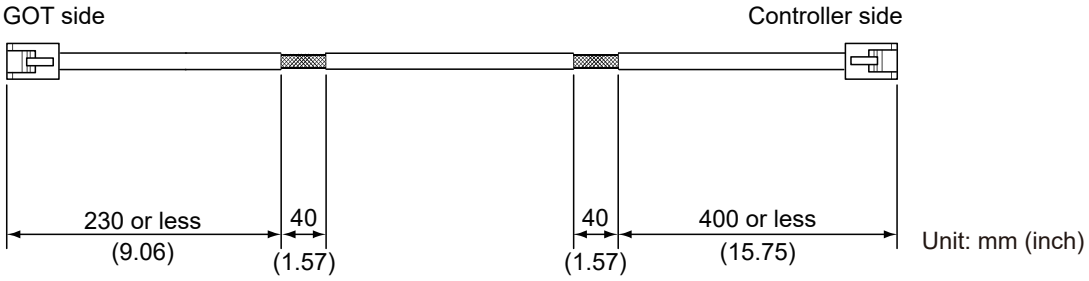

CC-Link IE Field Network connection

1. Strip off the sheath at both ends of the cable as shown in the figure below to expose braided shield for grounding.
The braided shield sections are used for grounding with a cable clamp.
☞ Page 168 Grounding a cable

2. Install a ferrite core to the cable in the positions as shown in the figure below.

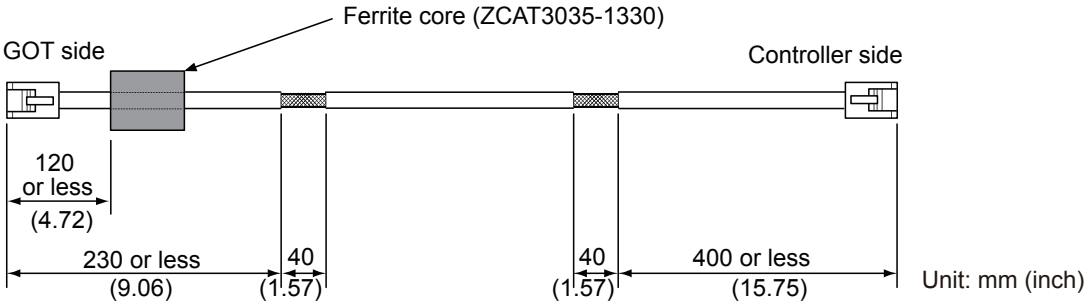

CC-Link connection (Intelligent device station)

1. Strip off the sheath at both ends of the cable as shown in the figure below to expose braided shield for grounding.
The braided shield sections are used for grounding with a cable clamp.
☞ Page 168 Grounding a cable

2. Install a ferrite core to the cable in the positions as shown in the figure below.
CC-Link dedicated cable for connecting the GOT and PLC

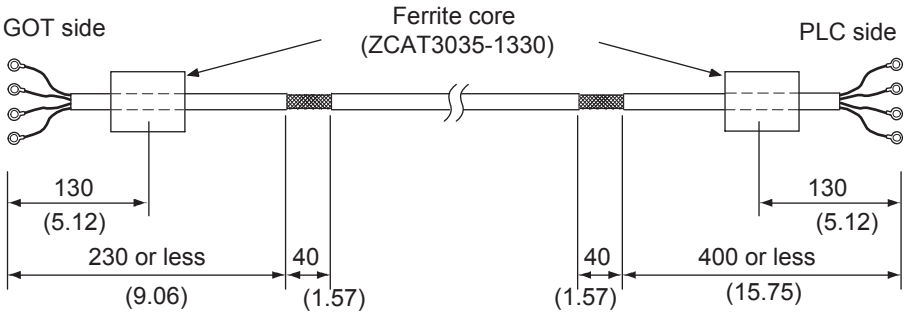

Unit: mm (inch)

CC-Link dedicated cable for connecting the GOT and GOT

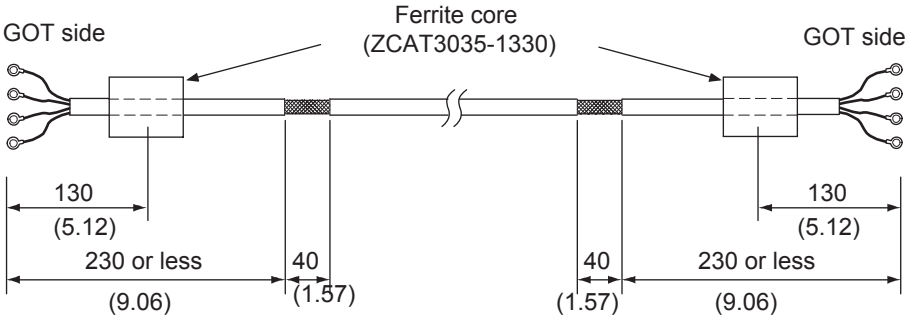

Unit: mm (inch)

External I/O device connection

1. Strip off the sheath at both ends of the cable as shown in the figure below to expose braided shield for grounding.
The braided shield sections are used for grounding with a cable clamp.
☞ Page 168 Grounding a cable

2. Connect the braided shield to the connector with the connector cover.

3. Twist the power cables.

GOT side External I/O device side

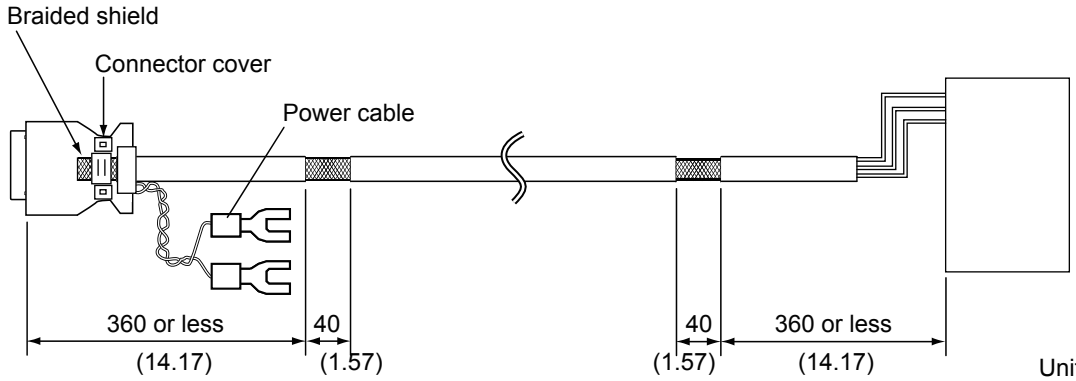

Unit: mm (inch)

Video/RGB/HDMI connection

■Video input cable

Strip off the sheath at both ends of the cable as shown in the figure below to expose outer braided shield for grounding. The braided shield sections are used for grounding with a cable clamp.

☞ Page 168 Grounding a cable

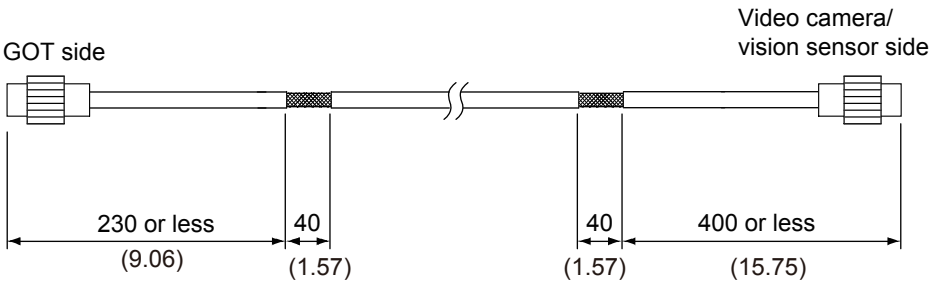

Unit: mm (inch)

■RGB input cable

1. Wrap the cable shielding material around the cable, and pull out the braided cables for grounding from the cable shielding material with the length as shown in the figure below.
2. Install a ferrite core to the cable in the positions as shown in the figure below.

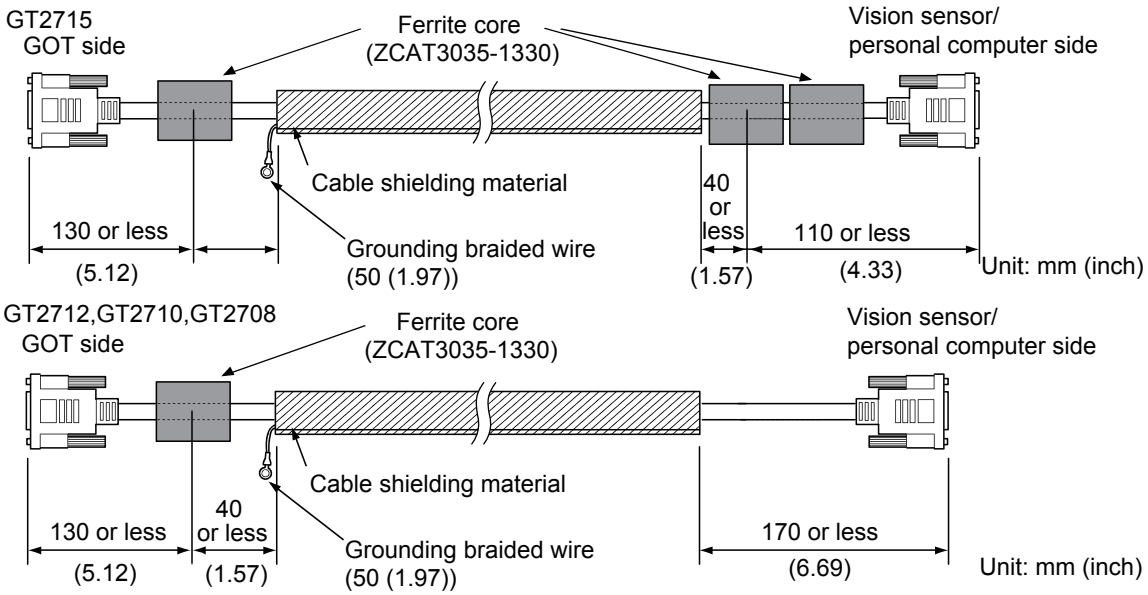

■RGB output cable

1. Wrap the cable shielding material around the cable, and pull out the braided cables for grounding from the cable shielding material with the length as shown in the figure below.
2. Install a ferrite core to the cable in the positions as shown in the figure below.

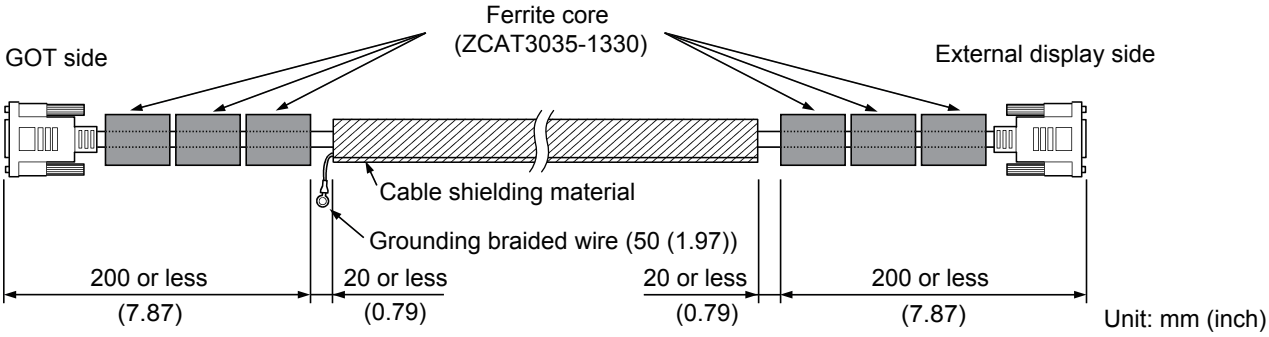

Unit: mm (inch)

■HDMI output cable

Install a ferrite core to the cable in the positions as shown in the figure below.

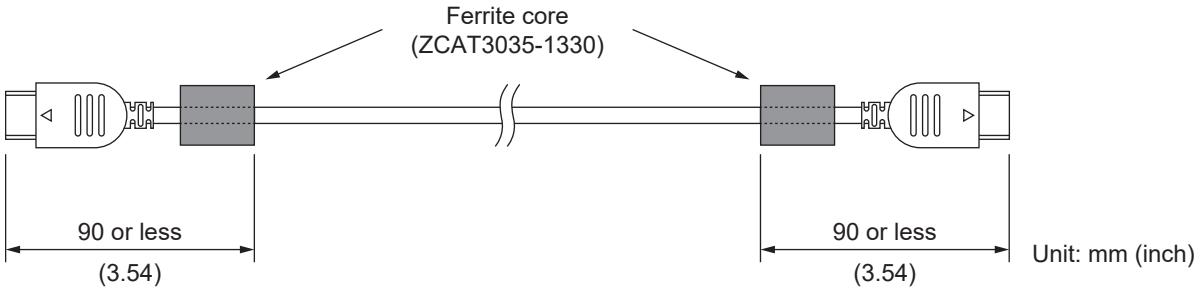

Sound output device connection (GT25-W only)

Install a ferrite core to the cable in the positions as shown in the figure below.

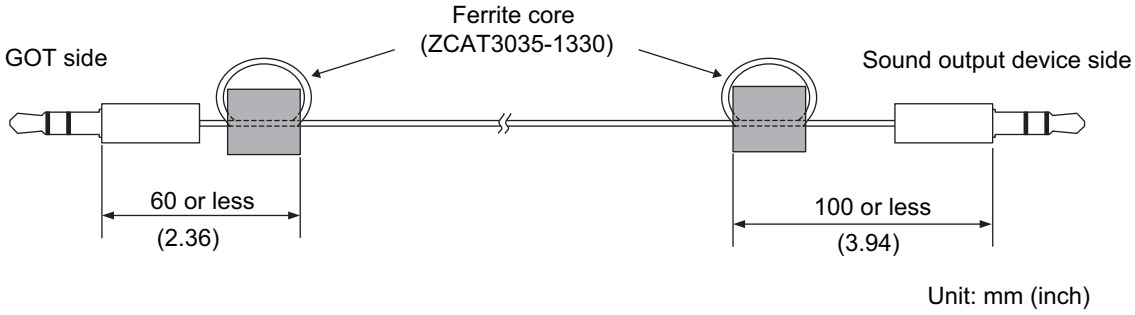

Non-Mitsubishi Electric PLC, microcomputer, temperature controller, inverter, servo amplifier, CNC, MODBUS/RTU, and MODBUS/TCP connections

Create the cables (RS-232 cable, RS-422/485 cable) for connecting the GOT and a controller by yourself.

For how to create a cable, refer to the following.

GOT2000 Series Connection Manual For GT Works3 Version1 that covers the controller used

Point

Treatment of the RS-232 cable and RS-422/485 cable

When the GOT is connected to a controller, configure the system according to the EMC Directive specifications for the controller.

The following shows the recommended instructions to comply with the EMC Directive.

However, the manufacturer of the equipment must determine the method to comply with the EMC Directive and conformance to the directive.

• RS-422/485 cable

When connecting each signal wire (except SG and FG wires), twist two signal wires as shown below.

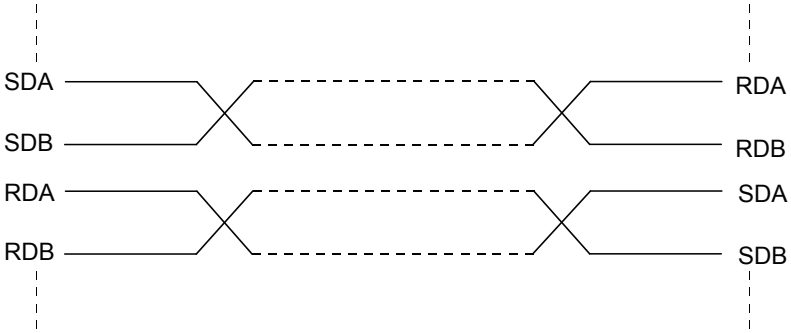

Connect two or more SG wires.

• RS-232 cable

Twist each signal wire (except SG and FG wires) with the SG wire.

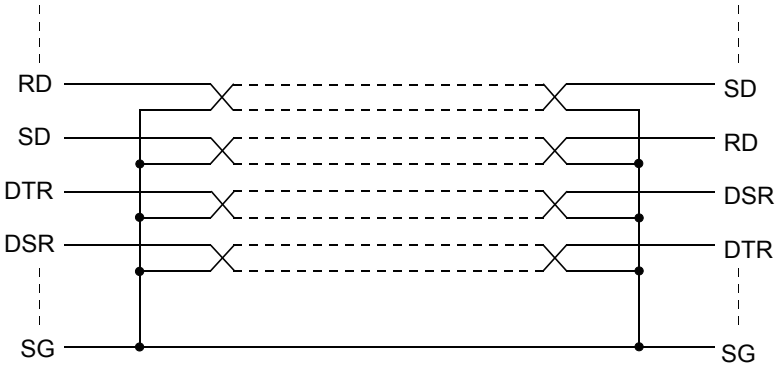

Install a ferrite core to the cable in the positions as shown in the figure below.

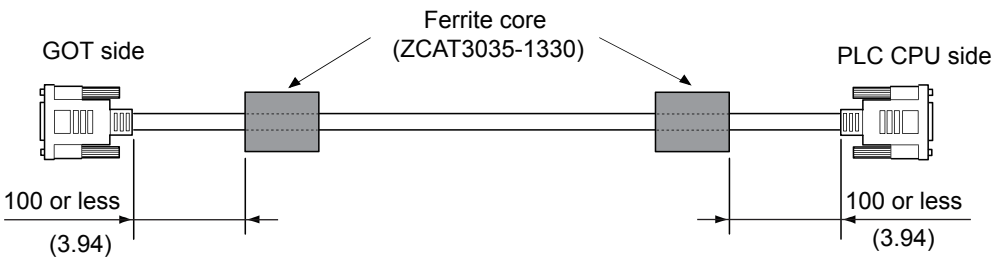

Unit: mm (inch)

Grounding a cable

Grounding method

Ground the cable and ground cable to the control panel where the GOT and the PLC are installed.

Ground the braided shield section of the cable to the control panel with the cable clamp (AD75CK).

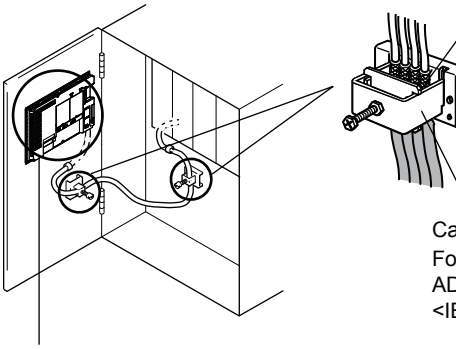

Braided shield

Cable clamps

For the attachment details of cable clamps, refer to AD75CK-type Cable Clamping Instruction Manual <IB-68682>.

Ground the ground cable to the FG terminal at the GOT power supply section when using GT15-C□EXSS-1 or GT15-C□BS.

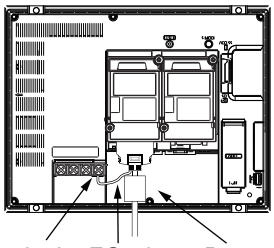

GOT FG terminal FG wire Bus connection cable

To ground a bus connection cable, ground the braided cable for grounding to the control panel by tightening a screw.

Precautions

Do not arrange the cable clamp close to the other cables that are not clamped.

The noise from the control panel may enter the cable clamp and adversely affect the GOT.

5.3 Low Voltage Directive Requirements

The Low Voltage Directive requires that the equipment operating with power supply ranging from 50 V AC to 1000 V AC or 75 V DC to 1500 V DC has enough safety.
This section explains the precautions for the installation and wiring of the GOT to comply with the Low Voltage Directive.
The data described herein are produced with our best, based on the regulation requirements and standards obtained by Mitsubishi Electric. However, the data do not guarantee that the equipment produced according to the data comply with the above directive.
The manufacturer of the equipment must determine the method to comply with the Low Voltage Directive and conformance to the directive.

Power supply

The insulation specification of the GOT is designed assuming installation category II.
Make sure to supply power to the GOT in installation category II.

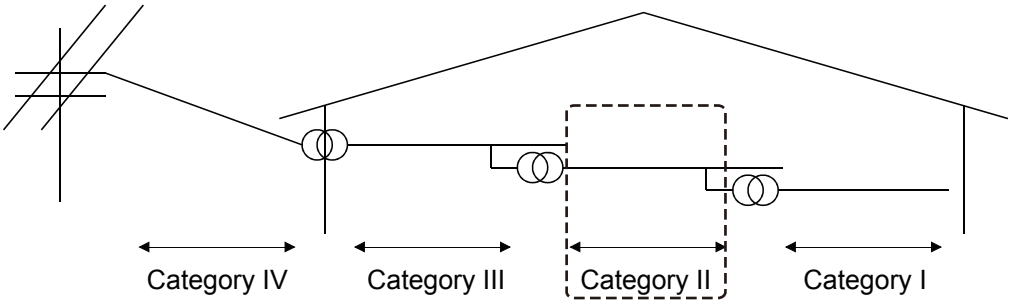

The installation category indicates the withstand surge voltage generated by lightning strike. Installation category I indicates the lowest withstand level, and installation category IV indicates the highest withstand level.
Installation category II indicates a power supply whose voltage has been reduced by two or more levels of isolation transformers from the public power distribution.

Control panel

The GOT is an open type device (designed to be integrated in equipment).
Make sure to install the GOT in a control panel.

Electric shock protection

To prevent a person who does not have enough knowledge of electric facilities, such as an operator, from electric shock, take the following measures on the control panel.

■Locking the control panel

Lock the control panel, and allow only a person who is well educated and has enough knowledge of electric facilities to unlock the control panel.

■Automatic power shutdown

Build the structure so that the power supply is shut down when the control panel is opened.

Dustproof and waterproof features

The control panel also prevents dust and water.

Insufficient dustproof and waterproof protection may lower the insulation withstand voltage, resulting in an insulation breakdown.

Since the insulation of the GOT is designed assuming pollution degree 2, use the GOT in an environment of pollution degree 2 or less.

Pollution degree	Description
1	Environment where the air is dry and nonconductive dust occurs
2	Environment where normally nonconductive dust occurs However, temporary conductivity occasionally occurs due to the accumulated dust. For example, the inside of the control panel in a control room or in the floor at a typical factory
3	Environment where conductive dust occurs and conductivity may occur due to the accumulated dust For example, a typical factory floor
4	Environment where continuous conductivity may occur due to rain, snow, and others For example, outdoor

Grounding

The ground terminals must be grounded in use.

Ground the GOT to ensure the safety and to comply with the EMC Directive.

The GOT has the following ground terminals.

Functional grounding ⏚: The functional ground terminal improves noise resistance.

External wiring

External controllers

If an external device connected to the GOT has a hazardous voltage circuit, the interface circuit to the GOT must have a reinforced insulation.

Reinforced insulation

The reinforced insulation indicates the insulation with the following withstand voltage.

Reinforced insulation withstand voltage (Source: Installation Category II of IEC664)

Rated voltage of hazardous voltage area	Withstand surge voltage (1.2/50 μs)
150 V AC or less	2500V
300 V AC or less	4000V

6 INSTALLATION AND REMOVAL

- Page 171 Installation Precautions
- Page 172 Panel Cut Dimensions
- Page 179 Stud
- Page 182 Installation Position
- Page 198 Control Panel Inside Temperature and GOT Installation Angle
- Page 205 Installing the GOT
- Page 216 Removing the GOT
- Page 221 Handling the Handy GOT
- Page 228 Installing and Removing the Extension Unit
- Page 231 Installing the Battery
- Page 242 Removing the Battery
- Page 251 Installing the SD Card
- Page 258 Removing the SD Card
- Page 265 Installing and Removing the USB Devices
- Page 267 Installing and Removing the USB cable
- Page 269 Installing and Removing the Panel-Mounted USB Port Extension

6.1 Installation Precautions

Install the GOT with consideration of the control panel inside dimensions and the installation prohibited area.
Depending on the types of connection cables connected to the GOT, the distance more than the described dimensions may be required.
Install the GOT with consideration of the connector dimensions and the cable bend radius.

6.2 Panel Cut Dimensions

GT27

GT2715-X

Open an installation hole on the control panel with the dimensions as shown below.

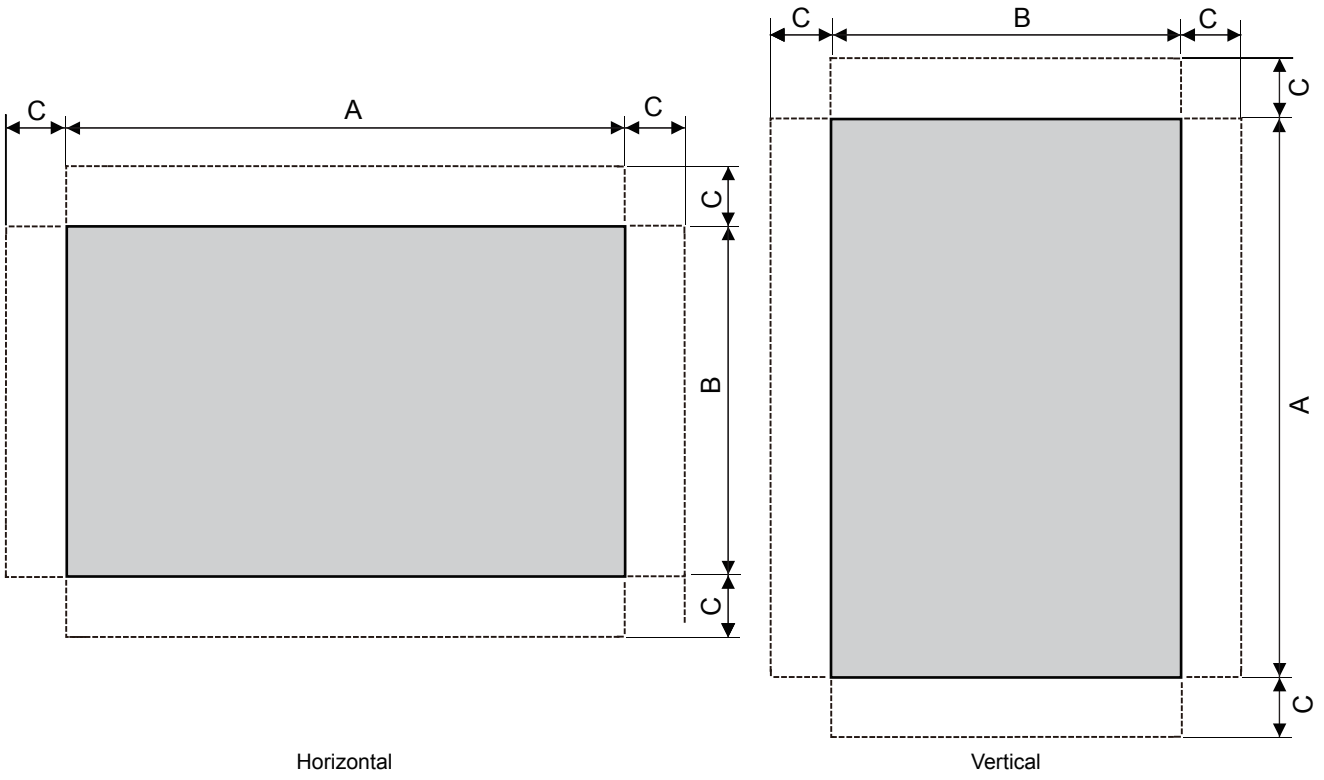

Unit: mm (inch)

Model	A	B	C	Panel thickness
GT2715-X	383.5 (15.10) (+2 (0.08), 0 (0))	282.5 (11.12) (+2 (0.08), 0 (0))	10 (0.39) or More	1.6 (0.06) to 4 (0.16)

The C dimension shows the measurements for installing fittings on the control panel.

GT2712-S, GT2710-S, GT2710-V, GT2708-S, GT2708-V, GT2705-V

Open an installation hole on the control panel with the dimensions as shown below.

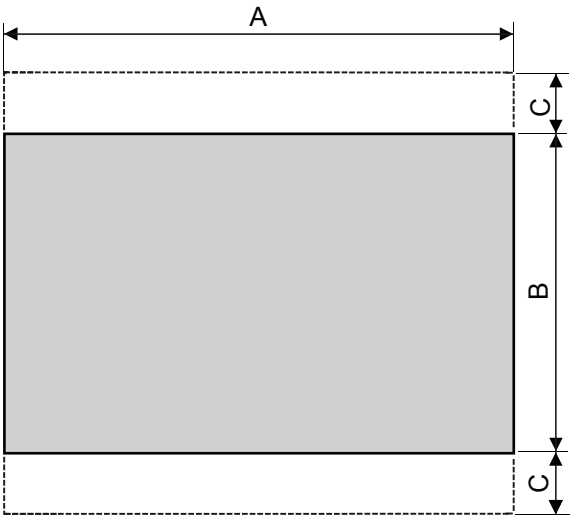

Horizontal

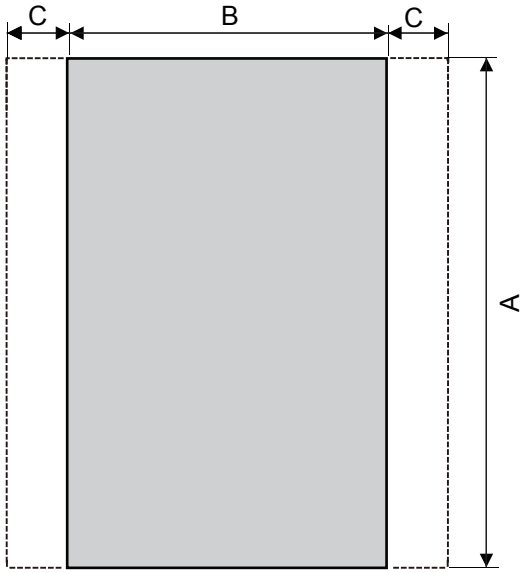

Vertical

Unit: mm (inch)

Model	A	B	C	Panel thickness
GT2712-S	302 (11.89) (+2 (0.08), 0 (0))	228 (8.98) (+2 (0.08), 0 (0))	10 (0.39) or More	1.6 (0.06) to 4 (0.16)
GT2710-S, GT2710-V	289 (11.38) (+2 (0.08), 0 (0))	200 (7.87) (+2 (0.08), 0 (0))		
GT2708-S, GT2508-V	227 (8.94) (+2 (0.08), 0 (0))	176 (6.93) (+2 (0.08), 0 (0))		
GT2705-V	153 (6.02) (+2 (0.08), 0 (0))	121 (4.76) (+2 (0.08), 0 (0))		

The C dimension shows the measurements for installing fittings on the control panel.

GT2512-WX, GT2510-WX, GT2507-W

Open an installation hole on the control panel with the dimensions as shown below.

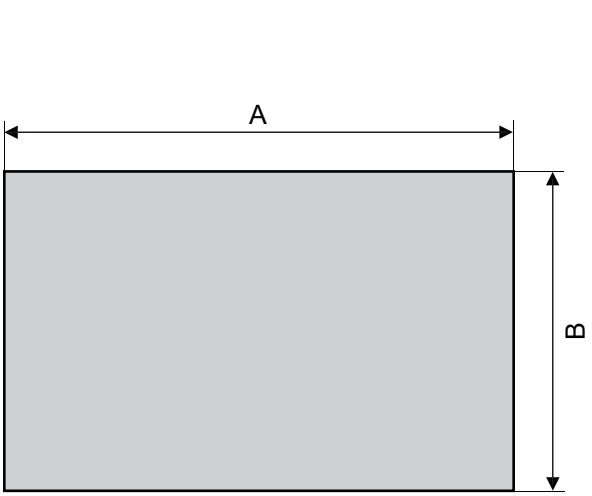

Horizontal

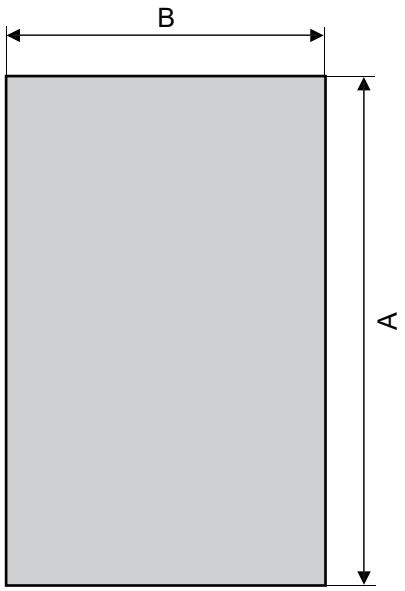

Vertical

Unit: mm (inch)

Model	A	B	Panel thickness
GT2512-WX	290.5 (11.44) (+1 (0.04), 0 (0))	210.5 (8.29) (+1 (0.04), 0 (0))	1.6 (0.06) to 4 (0.16)
GT2510-WX	243.5 (9.59) (+1 (0.04), 0 (0))	185.5 (7.30) (+1 (0.04), 0 (0))	
GT2507-W	180.5 (7.11) (+1 (0.04), 0 (0))	133.5 (5.26) (+1 (0.04), 0 (0))	

GT2507T-W

Open an installation hole on the control panel with the dimensions as shown below.

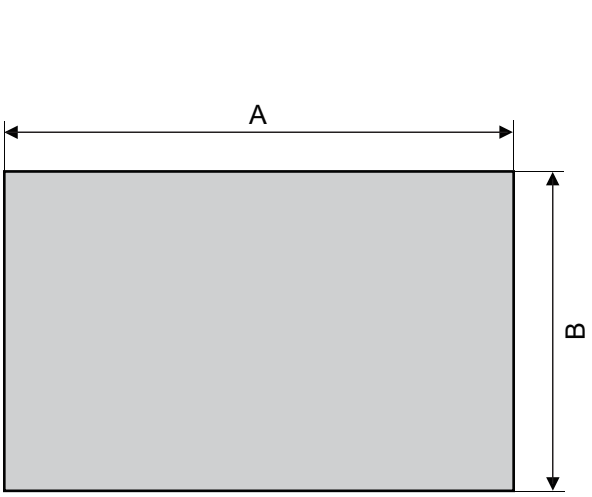

Horizontal

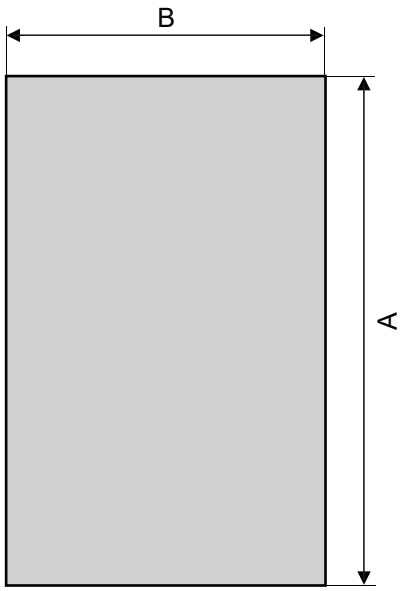

Vertical

Unit: mm (inch)

Model	A	B	Panel thickness
GT2507T-W	197 (7.76) (+1 (0.04), 0 (0))	141 (5.55) (+1 (0.04), 0 (0))	1.6 (0.06) to 4 (0.16)

GT2512-S, GT2510-V, GT2508-V, GT2505-V

Open an installation hole on the control panel with the dimensions as shown below.

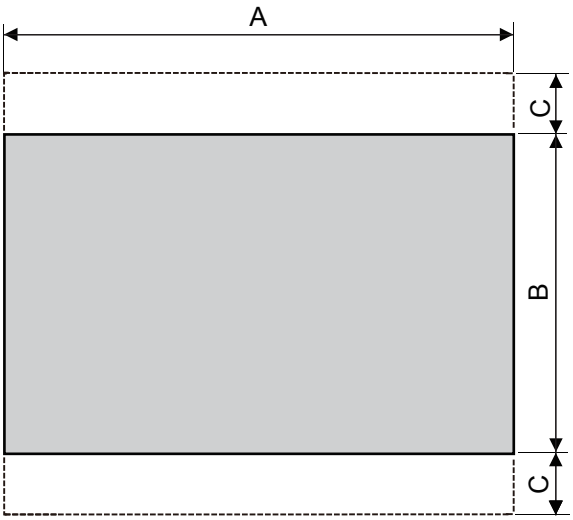

Horizontal

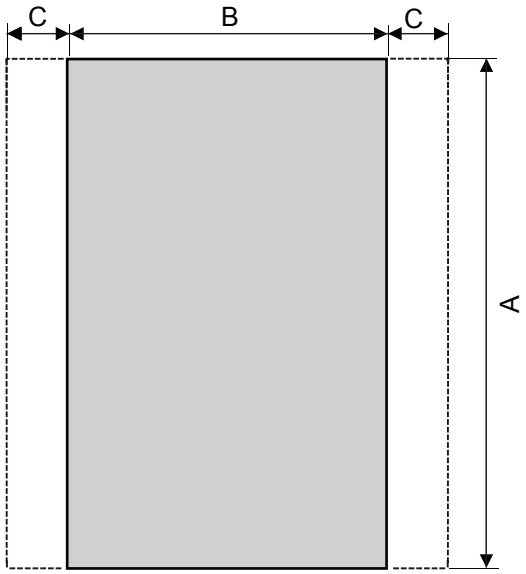

Vertical

Unit: mm (inch)

Model	A	B	C	Panel thickness
GT2512-S	302 (11.89) (+2 (0.08), 0 (0))	228 (8.98) (+2 (0.08), 0 (0))	10 (0.39) or More	1.6 (0.06) to 4 (0.16)
GT2510-V	289 (11.38) (+2 (0.08), 0 (0))	200 (7.87) (+2 (0.08), 0 (0))		
GT2508-V	227 (8.94) (+2 (0.08), 0 (0))	176 (6.93) (+2 (0.08), 0 (0))		
GT2505-V	153 (6.02) (+2 (0.08), 0 (0))	121 (4.76) (+2 (0.08), 0 (0))		

The C dimension shows the measurements for installing fittings on the control panel.

GT2512F-S, GT2510F-V, GT2508F-V

Open an installation hole on the control panel with the dimensions as shown below.

Horizontal

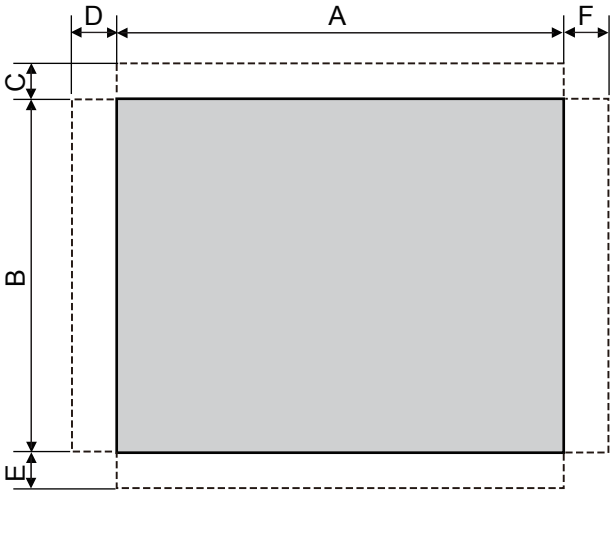

Back of the control panel

Vertical

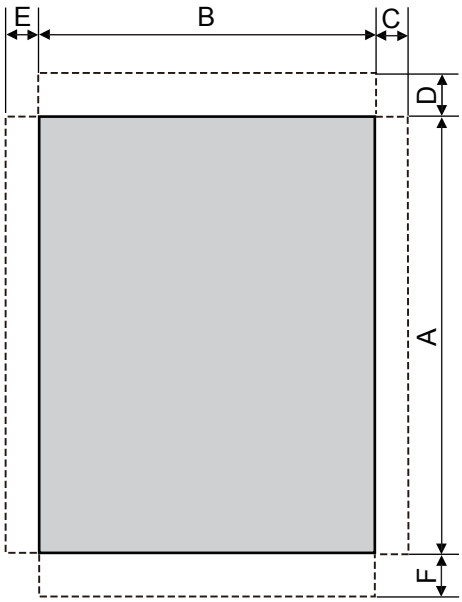

Back of the control panel

Unit: mm (inch)

Model	Fitting installation position (on the GOT)	A	B	C	D	E	F	Panel thickness
GT2512F-S	Long side of the GOT	269 (10.59) (+2 (0.08), 0 (0))	214 (8.43) (+2 (0.08), 0 (0))	28 (1.10)	17 (0.67)	36 (1.42)	26 (1.02)	1.5 (0.06) to 4 (0.16)
	Short side of the GOT			10 (0.39)	35 (1.38)	18 (0.71)	44 (1.73)	
GT2510F-V	Long side of the GOT	234 (9.21) (+2 (0.08), 0 (0))	187 (7.36) (+2 (0.08), 0 (0))	28 (1.10)	33 (1.30)	32 (1.26)	33 (1.30)	
	Short side of the GOT			10 (0.39)	51 (2.01)	14 (0.55)	51 (2.01)	
GT2508F-V	Long side of the GOT	194 (7.64) (+2 (0.08), 0 (0))	158 (6.22) (+2 (0.08), 0 (0))	28 (1.10)	14 (0.55)	32 (1.26)	29 (1.14)	
	Short side of the GOT			10 (0.39)	32 (1.26)	14 (0.55)	47 (1.85)	

The C to F dimensions show the measurements for installing fittings on the control panel.

Additionally, install studs on the control panel.

For information on how to install studs, refer to the following.

☞ Page 179 Stud

GT23

Open an installation hole on the control panel with the dimensions as shown below.

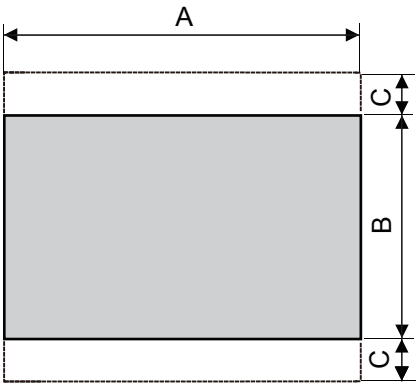

Horizontal

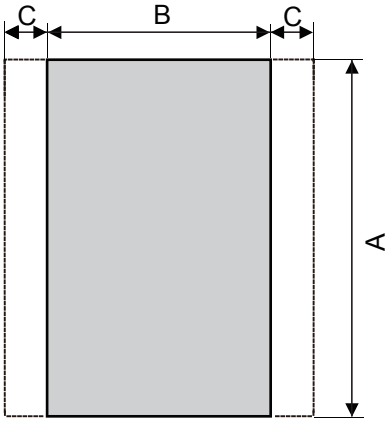

Vertical

Unit: mm (inch)

Model	A	B	C	Panel thickness
GT2310	289 (11.38) (+2 (0.08), 0 (0))	200 (7.87) (+2 (0.08), 0 (0))	10 (0.39) or More	1.6 (0.06) to 4 (0.16)
GT2308	227 (8.94) (+2 (0.08), 0 (0))	176 (6.93) (+2 (0.08), 0 (0))		

The C dimension shows the measurements for installing fittings on the control panel.

GT21

Open an installation hole on the control panel with the dimensions as shown below.

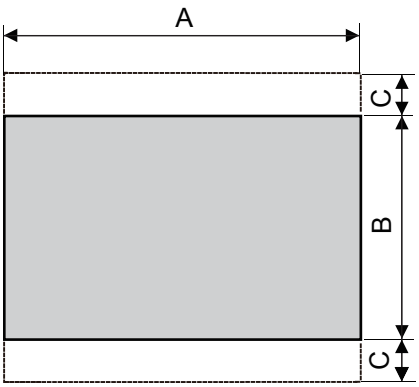

Horizontal

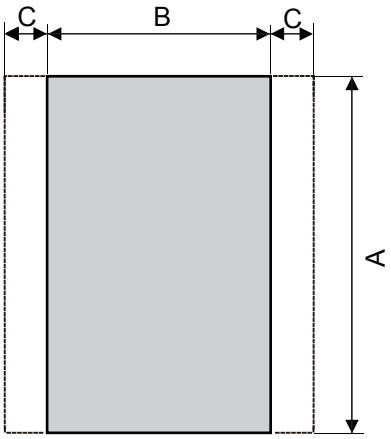

Vertical

Unit: mm (inch)

Model	A	B	C	Panel thickness
GT2107-W	180.5 (7.11) (+1 (0.04), 0 (0))	133.5 (5.26) (+1 (0.04), 0 (0))	13 (0.51) or more	1.6 (0.06) to 4 (0.16)
GT2105	153 (6.02) (+2 (0.08), 0 (0))	121 (4.76) (+2 (0.08), 0 (0))	10 (0.39) or More	1.6 (0.06) to 4 (0.16)
GT2104-R	118 (4.65) (+1 (0.04), 0 (0))	92 (3.62) (+1 (0.04), 0 (0))	13 (0.51) or more	1 (0.04) to 4 (0.16)
GT2104-P	137 (5.39) (+1 (0.04), 0 (0))	66 (2.60) (+1 (0.04), 0 (0))	13 (0.51) or more	1 (0.04) to 4 (0.16)
GT2103-P	105 (4.13) (+1 (0.04), 0 (0))	66 (2.60) (+1 (0.04), 0 (0))	13 (0.51) or more	1 (0.04) to 4 (0.16)

The C dimension shows the measurements for installing fittings on the control panel.

6.3 Stud

Stud specifications

Use the studs that satisfy the following specifications.

Diameter	Length
M4	10 mm (0.39 inch) or more

The studs on the control panel must have strength adequate to withstand a tightening torque of 0.9 N•m or more.
Make sure that no foreign matter such as welding waste is at and around the bases of the studs.
Tighten nuts on the studs in the specified torque range (0.8 N•m to 0.9 N•m) with a wrench for M4 nuts.

Distance between studs

GT2512F-S, GT2510F-V, GT2508F-V

To mount the GOT on the control panel, studs are necessary.
Align the studs with the installation holes of the fittings, and install the studs.
The fittings must be installed on the top and bottom, or the right and left of the GOT.
For GT2512F, you are recommended to install the fittings on the long sides of the GOT.

■Measurements based on the screen center

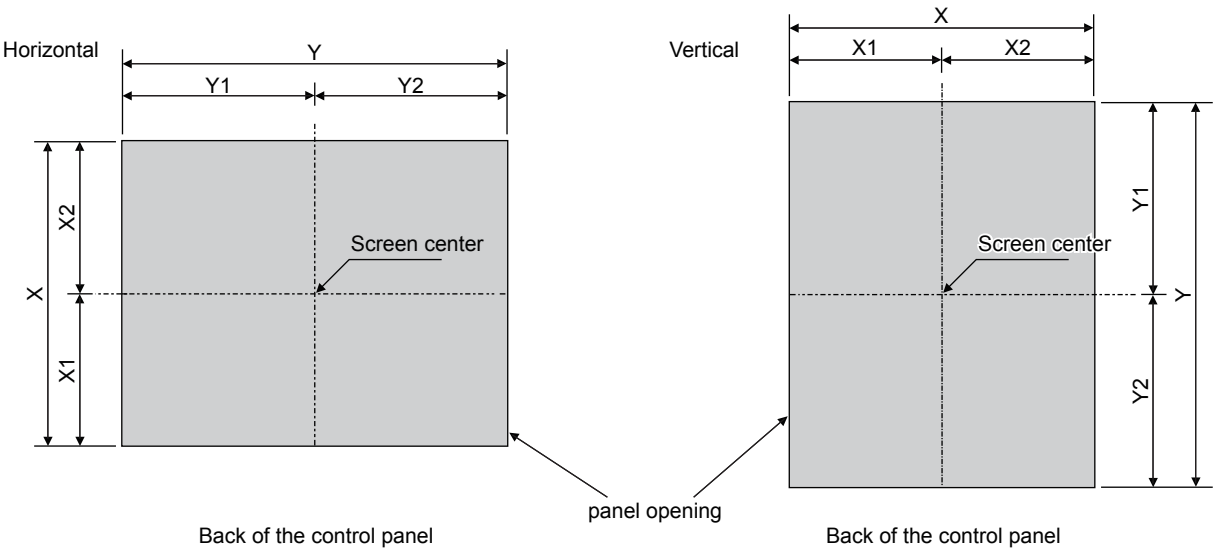

Unit: mm (inch)

Model	X	X1	X2	Y	Y1	Y2
GT2512F-S	214 (8.43) (+2 (0.08), 0 (0))	103 (4.06) (+2 (0.08), 0 (0))	(111 (4.37))	269 (10.59) (+2 (0.08), 0 (0))	134.5 (5.30) (+1 (0.04), 0 (0))	(134.5 (5.30))
GT2510F-V	187 (7.36) (+2 (0.08), 0 (0))	89.5 (3.52) (+1 (0.04), 0 (0))	(97.5 (3.84))	234 (9.21) (+2 (0.08), 0 (0))	117 (4.61) (+1 (0.04), 0 (0))	(117 (4.61))
GT2508F-V	158 (6.22) (+2 (0.08), 0 (0))	75.25 (2.96) (+1 (0.04), 0 (0))	(82.75 (3.26))	194 (7.64) (+2 (0.08), 0 (0))	97.5 (3.84) (+1 (0.04), 0 (0))	(96.5 (3.80))

■Measurements for the horizontally-oriented GOT with fittings on its top and bottom

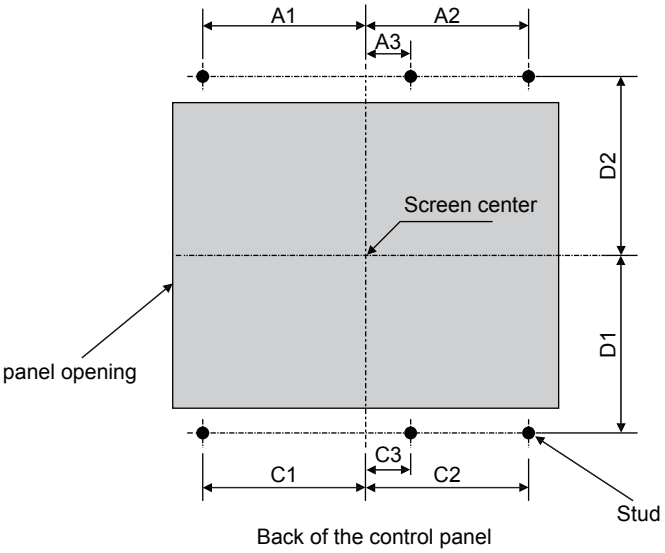

Unit: mm (inch)

Model	A1	A2	A3	C1	C2	C3	D1	D2
GT2512F-S	98 (3.86)± 0.15 (0.01)	113 (4.45)± 0.15 (0.01)	7.5 (0.30)± 0.15 (0.01)	98 (3.86)± 0.15 (0.01)	113 (4.45)± 0.15 (0.01)	7.5 (0.30)± 0.15 (0.01)	128.5 (5.06)± 0.15 (0.01)	132.5 (5.22)± 0.15 (0.01)
GT2510F-V	105.5 (4.15)± 0.15 (0.01)	105.5 (4.15)± 0.15 (0.01)	0 (0)	105.5 (4.15)± 0.15 (0.01)	105.5 (4.15)± 0.15 (0.01)	0 (0)	114.5 (4.51)± 0.15 (0.01)	118.5 (4.67)± 0.15 (0.01)
GT2508F-V	64.5 (2.54)± 0.15 (0.01)	74.5 (2.93)± 0.15 (0.01)	-	64.5 (2.54)± 0.15 (0.01)	74.5 (2.93)± 0.15 (0.01)	-	104.5 (4.11)± 0.15 (0.01)	104.5 (4.11)± 0.15 (0.01)

■Measurements for the horizontally-oriented GOT with fittings on its right and left

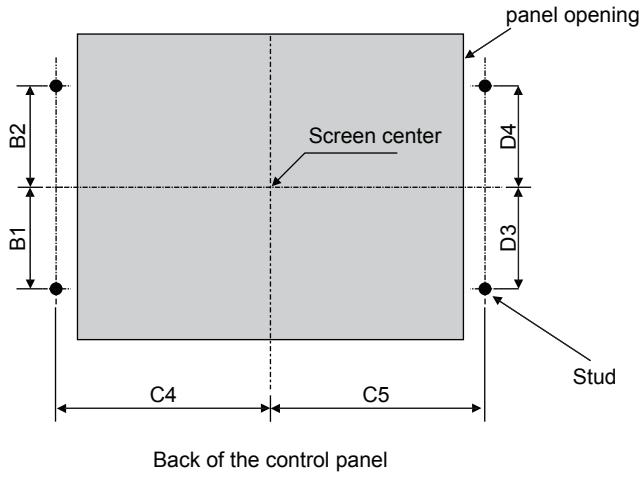

Unit: mm (inch)

Model	B1	B2	C4	C5	D3	D4
GT2512F-S	75.5 (2.97)± 0.15 (0.01)	79.5 (3.13)± 0.15 (0.01)	160 (6.30)± 0.15 (0.01)	175 (6.89)± 0.15 (0.01)	75.5 (2.97)± 0.15 (0.01)	79.5 (3.13)± 0.15 (0.01)
GT2510F-V	58 (2.28)± 0.15 (0.01)	58 (2.28)± 0.15 (0.01)	161 (6.34)± 0.15 (0.01)	161 (6.34)± 0.15 (0.01)	58 (2.28)± 0.15 (0.01)	58 (2.28)± 0.15 (0.01)
GT2508F-V	58 (2.28)± 0.15 (0.01)	58 (2.28)± 0.15 (0.01)	126 (4.96)± 0.15 (0.01)	134 (5.28)± 0.15 (0.01)	58 (2.28)± 0.15 (0.01)	58 (2.28)± 0.15 (0.01)

■Measurements for the vertically-oriented GOT with fittings on its top and bottom

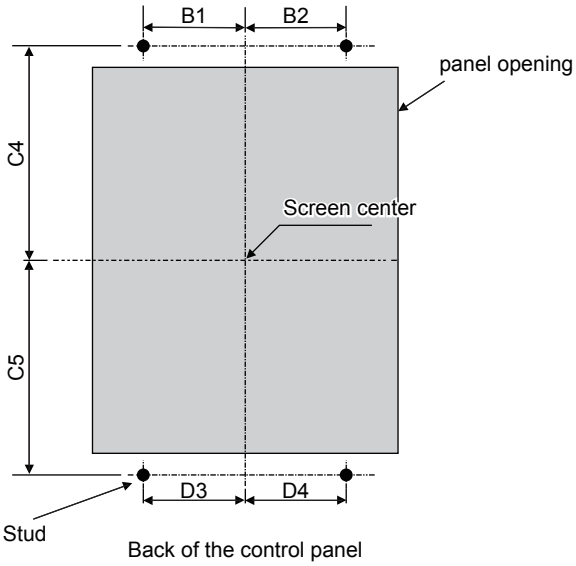

Unit: mm (inch)

Model	B1	B2	C4	C5	D3	D4
GT2512F-S	75.5 (2.97)± 0.15 (0.01)	79.5 (3.13)± 0.15 (0.01)	160 (6.30)± 0.15 (0.01)	175 (6.89)± 0.15 (0.01)	75.5 (2.97)± 0.15 (0.01)	79.5 (3.13)± 0.15 (0.01)
GT2510F-V	58 (2.28)± 0.15 (0.01)	58 (2.28)± 0.15 (0.01)	161 (6.34)± 0.15 (0.01)	161 (6.34)± 0.15 (0.01)	58 (2.28)± 0.15 (0.01)	58 (2.28)± 0.15 (0.01)
GT2508F-V	58 (2.28)± 0.15 (0.01)	58 (2.28)± 0.15 (0.01)	126 (4.96)± 0.15 (0.01)	134 (5.28)± 0.15 (0.01)	58 (2.28)± 0.15 (0.01)	58 (2.28)± 0.15 (0.01)

■Measurements for the vertically-oriented GOT with fittings on its right and left

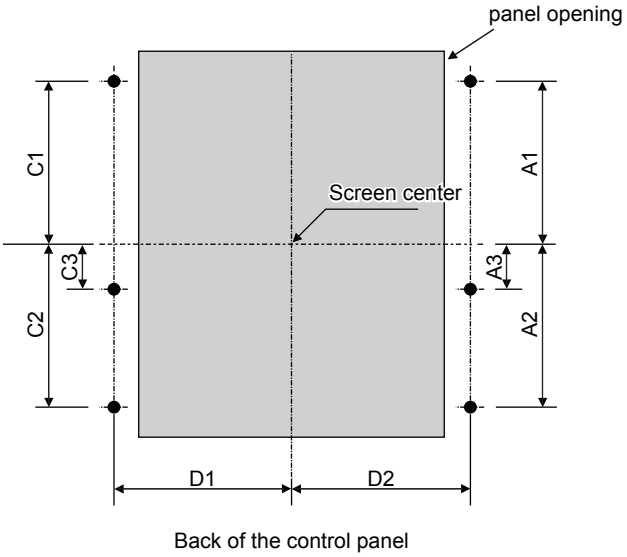

Unit: mm (inch)

Model	A1	A2	A3	C1	C2	C3	D1	D2
GT2512F-S	98 (3.86)± 0.15 (0.01)	113 (4.45)± 0.15 (0.01)	7.5 (0.30)± 0.15 (0.01)	98 (3.86)± 0.15 (0.01)	113 (4.45)± 0.15 (0.01)	7.5 (0.30)± 0.15 (0.01)	128.5 (5.06)± 0.15 (0.01)	132.5 (5.22)± 0.15 (0.01)
GT2510F-V	105.5 (4.15)± 0.15 (0.01)	105.5 (4.15)± 0.15 (0.01)	0 (0)	105.5 (4.15)± 0.15 (0.01)	105.5 (4.15)± 0.15 (0.01)	0 (0)	114.5 (4.51)± 0.15 (0.01)	118.5 (4.67)± 0.15 (0.01)
GT2508F-V	64.5 (2.54)± 0.15 (0.01)	74.5 (2.93)± 0.15 (0.01)	-	64.5 (2.54)± 0.15 (0.01)	74.5 (2.93)± 0.15 (0.01)	-	104.5 (4.11)± 0.15 (0.01)	104.5 (4.11)± 0.15 (0.01)

6.4 Installation Position

To install the GOT, some distance is required between the GOT and the other devices.

GT27

Depending on the units and cables used for the GOT, the distance more than the described dimensions may be required.
Install the GOT with consideration of the connector dimensions and the cable bend radius.
For the cable pull-out distance from the bottom of the GOT, refer to the following.
☞ Page 417 Cable Bend Radius for GT27 with an Extension Unit
For the vertical installation, install the GOT so that the vertical installation arrow printed on the GOT rear face points upward.
☞ Page 121 GT27

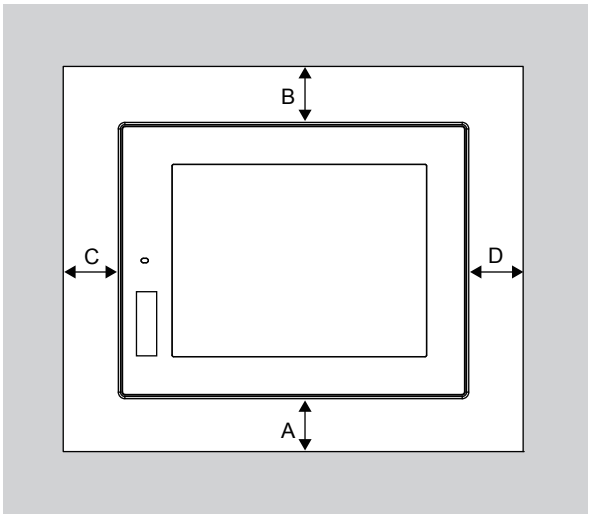

Horizontal

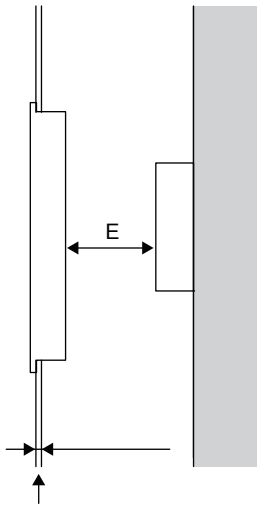

Panel thickness: 1.6 mm to 4 mm
(0.06 to 0.16inch)

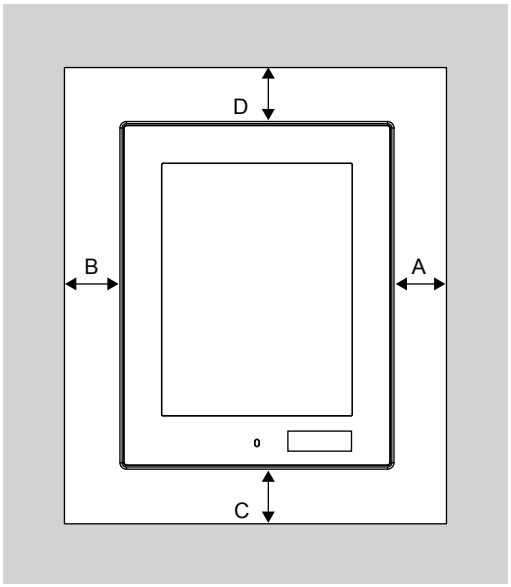

Vertical

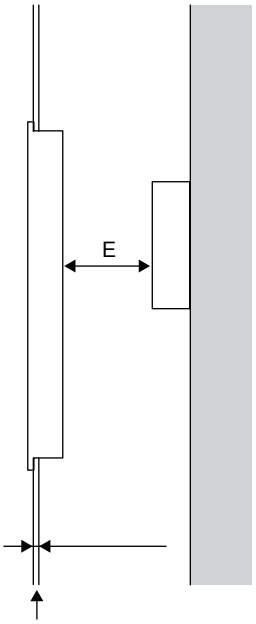

Panel thickness: 1.6 mm to 4 mm
(0.06 to 0.16inch)

The following tables list the distance required between the GOT and the other devices.
The dimensions within the parentheses apply when no equipment generating radiated noise (such as a contactor) or heat is installed near the GOT.
However, always keep the ambient temperature of the GOT to 55 °C or lower.
Unit: mm (inch)

Item		GT27				
		GT2715-X	GT2712-S	GT2710-S GT2710-V	GT2708-S GT2708-V	GT2705-V
A	GOT only	48 (1.89) or more [18 (0.71) or more]			48 (1.89) or more [29 (1.14) or more]	59 (2.33) or more
	Ethernet communication unit fitted	48 (1.89) or more [18 (0.71) or more]				
	Bus connection unit is fitted	48 (1.89) or more [18 (0.71) or more]			23 (0.91) or more [29 (1.14) or more]	48 (1.89) or more
	Serial connection unit is fitted	48 (1.89) or more [18 (0.71) or more]				47 (1.85) or more
	CC-Link communication unit (GT15-J61BT13) fitted	48 (1.89) or more [18 (0.71) or more]				50 (1.97) or more [22 (0.87) or more]
	MELSECNET/H communication unit (coaxial) fitted *1	48 (1.89) or more [18 (0.71) or more]	48 (1.89) or more [38 (1.50) or more]	48 (1.89) or more [45 (1.77) or more]	67 (2.64) or more	81 (3.19) or more
	MELSECNET/H communication unit(optical) fitted *2	48 (1.89) or more [18 (0.71) or more]				77 (3.04) or more
	CC-Link IE TSN communication unit fitted	48 (1.89) or more [18 (0.71) or more]				48 (1.89) or more
	CC-Link IE Controller Network communication unit fitted	48 (1.89) or more [18 (0.71) or more]				55 (2.17) or more
	CC-Link IE Field Network communication unit fitted	48 (1.89) or more [18 (0.71) or more]				55 (2.17) or more
	Video input unit fitted *1	48 (1.89) or more [18 (0.71) or more]	48 (1.89) or more [38 (1.50) or more]	48 (1.89) or more [45 (1.77) or more]	67 (2.64) or more	-
	RGB input unit fitted *3	48 (1.89) or more [18 (0.71) or more]				-
	Video/RGB input unit fitted *1*3	48 (1.89) or more [18 (0.71) or more]	48 (1.89) or more [38 (1.50) or more]	48 (1.89) or more [45 (1.77) or more]	67 (2.64) or more	-
	RGB output unit fitted *3	48 (1.89) or more [18 (0.71) or more]				-
	Multimedia unit fitted *1	48 (1.89) or more [18 (0.71) or more]	48 (1.89) or more [38 (1.50) or more]	48 (1.89) or more [45 (1.77) or more]	67 (2.64) or more	-
	Printer unit fitted	48 (1.89) or more [18 (0.71) or more]				
	External I/O unit fitted	48 (1.89) or more [18 (0.71) or more]				
	Sound output unit fitted	48 (1.89) or more [18 (0.71) or more]				
B		Horizontal: 78 (3.07) or more [18 (0.71) or more] Vertical: 48 (1.89) or more [18 (0.71) or more]				
C	When the SD card is used	50 (1.97) or more [20 (0.79) or more]			50 (1.97) or more	100 (3.94) or more
	When the SD card is not used	50 (1.97) or more [20 (0.79) or more]				
D		Horizontal: 50 (1.97) or more [20 (0.79) or more] Vertical: 80 (3.15) or more [20 (0.79) or more]				
E *4		100 (3.94) or more [20 (0.79) or more]				

*1 This value is for use of the coaxial cable 3C-2V (JIS C 3501).
For specifications of the cable, refer to the GOT2000 Series Connection Manual for a controller used.
*2 This value differs depending on the cable used.
*3 This value differs depending on the cable used.
If the bending radius of the cable used is greater than the value specified above, apply the value of the cable used.
*4 When opening or closing the battery cover: 72 (2.83) or more

GT2512-WX, GT2510-WX, GT2507-W

Depending on the units and cables used for the GOT, the distance more than the described dimensions may be required.
Install the GOT with consideration of the connector dimensions and the cable bend radius.
For the vertical installation, install the GOT so that the vertical installation arrow printed on the GOT rear face points upward.
☞ Page 125 GT2512-WX, GT2510-WX, GT2507-W

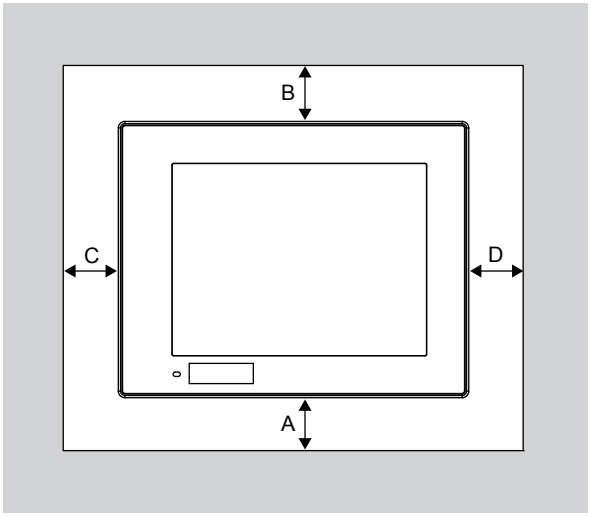

Horizontal

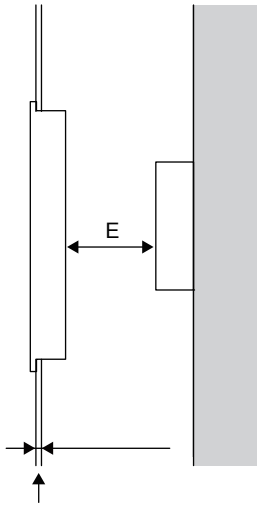

Panel thickness: 1.6 mm to 4 mm
(0.06 to 0.16inch)

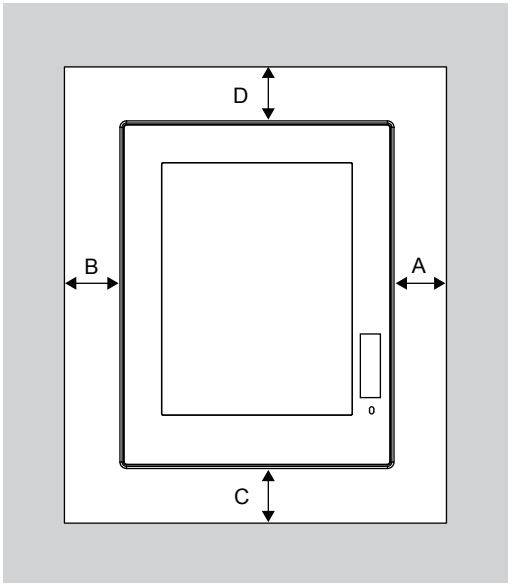

Vertical

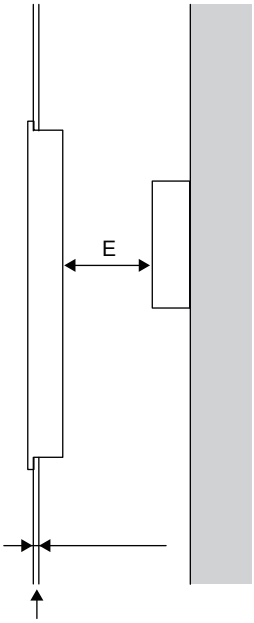

Panel thickness: 1.6 mm to 4 mm
(0.06 to 0.16inch)

The following tables list the distance required between the GOT and the other devices.
The dimensions within the parentheses apply when no equipment generating radiated noise (such as a contactor) or heat is installed near the GOT.
However, always keep the ambient temperature of the GOT to 55 °C or lower.
Unit: mm (inch)

Item	GT25		
	GT2512-WX	GT2510-WX	GT2507-W
A	51 (2.01) or more [23 (0.91) or more]		64 (2.52) or more
B	Horizontal: 81 (3.19) or more [23 (0.91) or more] Vertical: 53 (2.09) or more [23 (0.91 or more]		
C	53 (2.09) or more [23 (0.91) or more]		53 (2.09) or more [32 (1.26) or more]
D	Horizontal: 53 (2.09) or more [23 (0.91) or more] Vertical: 81 (3.19) or more [23 (0.91) or more]		
E *1	100 (3.94) or more [20 (0.79) or more]		

*1 When opening or closing the battery cover: 72 (2.83) or more.

GT2507T-W

Depending on the units and cables used for the GOT, the distance more than the described dimensions may be required.
Install the GOT with consideration of the connector dimensions and the cable bend radius.
For the vertical installation, install the GOT so that the vertical installation arrow printed on the GOT rear face points upward.
☞ Page 128 GT2507T-W

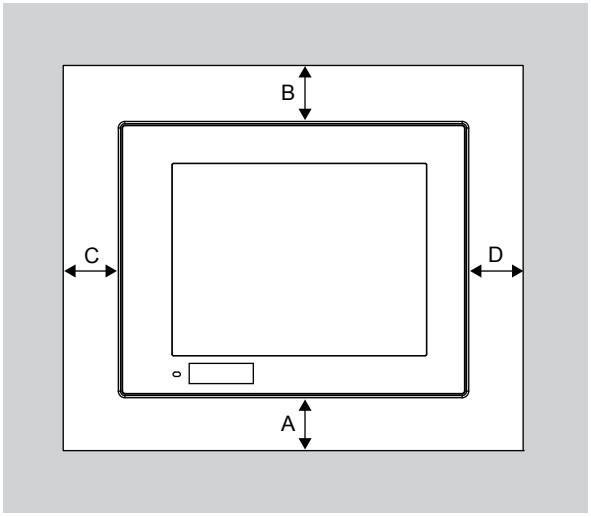

Horizontal

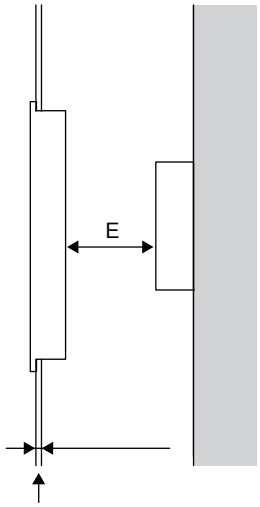

Panel thickness: 1.6 mm to 4 mm
(0.06 to 0.16inch)

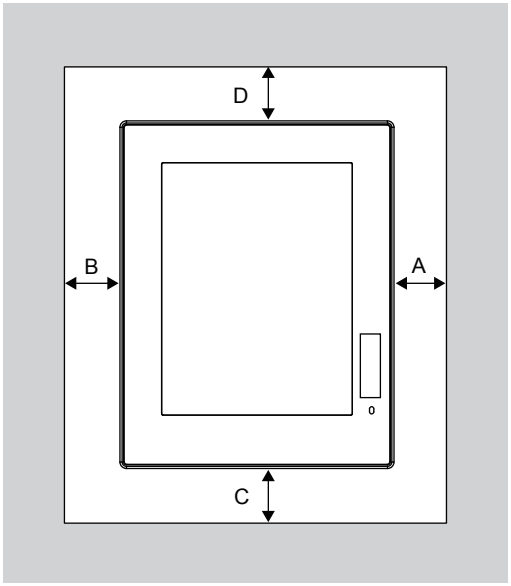

Vertical

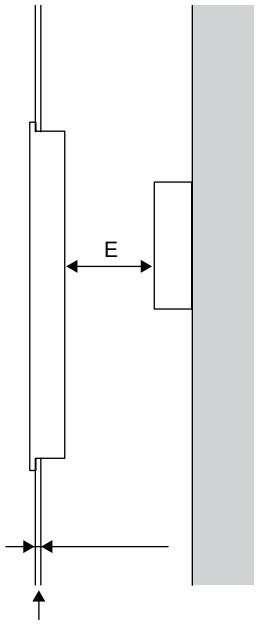

Panel thickness: 1.6 mm to 4 mm
(0.06 to 0.16inch)

The following tables list the distance required between the GOT and the other devices.
The dimensions within the parentheses apply when no equipment generating radiated noise (such as a contactor) or heat is installed near the GOT.
However, always keep the ambient temperature of the GOT to 65 °C or lower.
Unit: mm (inch)

Item	GT25
	GT2507T-W
A	64 (2.52) or more
B	Horizontal: 81 (3.19) or more [23 (0.91) or more] Vertical: 53 (2.09) or more [23 (0.91 or more]
C	53 (2.09) or more [32 (1.26) or more]
D	Horizontal: 53 (2.09) or more [23 (0.91) or more] Vertical: 81 (3.19) or more [23 (0.91) or more]
E *1	100 (3.94) or more [20 (0.79) or more

*1 When opening or closing the battery cover: 72 (2.83) or more.

GT2512-S, GT2510-V, GT2508-V, GT2505-V

Depending on the units and cables used for the GOT, the distance more than the described dimensions may be required.
Install the GOT with consideration of the connector dimensions and the cable bend radius.
For the cable pull-out distance from the bottom of the GOT, refer to the following.
☞ Page 422 Cable Bend Radius for GT25 with an Extension Unit
For the vertical installation, install the GOT so that the vertical installation arrow printed on the GOT rear face points upward.
☞ Page 130 GT25-S, GT25-V

■For GT2512-S, GT2510-V, GT2508-V

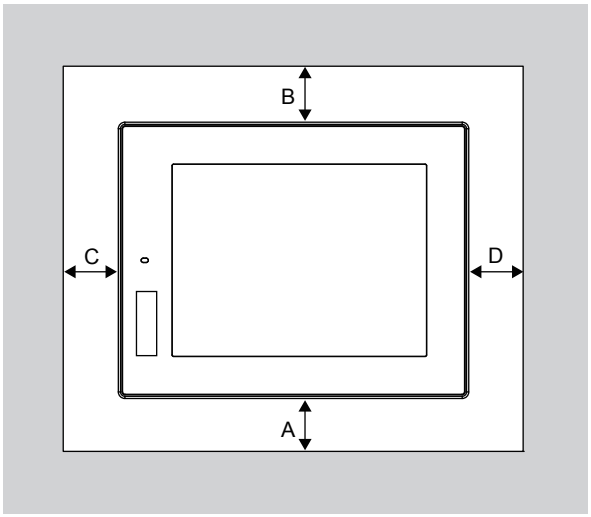

Horizontal

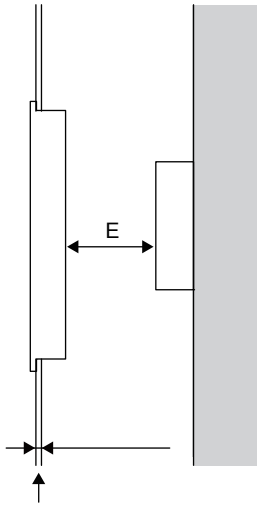

Panel thickness: 1.6 mm to 4 mm
(0.06 to 0.16inch)

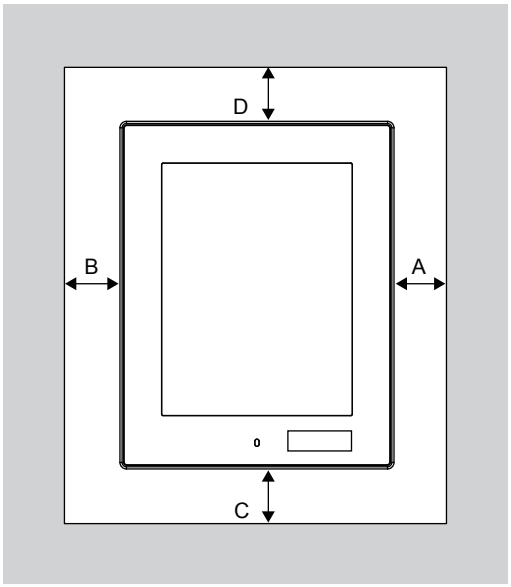

Vertical

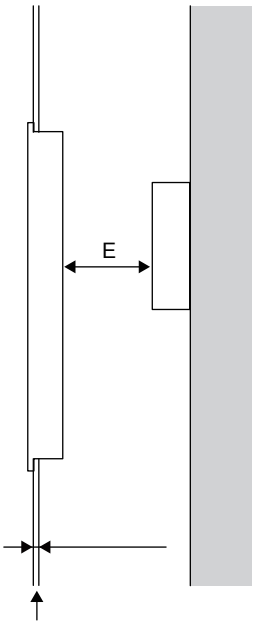

Panel thickness: 1.6 mm to 4 mm
(0.06 to 0.16inch)

The following tables list the distance required between the GOT and the other devices.
The dimensions within the parentheses apply when no equipment generating radiated noise (such as a contactor) or heat is installed near the GOT.
However, always keep the ambient temperature of the GOT to 55 °C or lower.
Unit: mm (inch)

Item		GT25		
		GT2512-S	GT2510-V	GT2508-V
A	GOT only	48 (1.89) or more [18 (0.71) or more]		48 (1.89) or more [29 (1.14) or more]
	Ethernet communication unit fitted	48 (1.89) or more [18 (0.71) or more]		
	Bus connection unit is fitted	48 (1.89) or more [18 (0.71) or more]		23 (0.91) or more [29 (1.14) or more]
	Serial connection unit is fitted	48 (1.89) or more [18 (0.71) or more]		
	CC-Link communication unit (GT15-J61BT13) fitted	48 (1.89) or more [18 (0.71) or more]		
	MELSECNET/H communication unit (coaxial) fitted *1	48 (1.89) or more [38 (1.50) or more]	48 (1.89) or more [45 (1.77) or more]	67 (2.64) or more
	MELSECNET/H communication unit(optical) fitted *2	48 (1.89) or more [18 (0.71) or more]		
	CC-Link IE TSN communication unit fitted	48 (1.89) or more [18 (0.71) or more]		
	CC-Link IE Controller Network communication unit fitted	48 (1.89) or more [18 (0.71) or more]		
	CC-Link IE Field Network communication unit fitted	48 (1.89) or more [18 (0.71) or more]		
	Printer unit fitted	48 (1.89) or more [18 (0.71) or more]		
	External I/O unit fitted	48 (1.89) or more [18 (0.71) or more]		
	Sound output unit fitted	48 (1.89) or more [18 (0.71) or more]		
B		Horizontal: 78 (3.07) or more [18 (0.71) or more] Vertical: 48 (1.89) or more [18 (0.71) or more]		
C	When the SD card is used	50 (1.97) or more [20 (0.79) or more]		50 (1.97) or more
	When the SD card is not used	50 (1.97) or more [20 (0.79) or more]		
D		Horizontal: 50 (1.97) or more [20 (0.79) or more] Vertical: 80 (3.15) or more [20 (0.79) or more]		
E *3		100 (3.94) or more [20 (0.79) or more]		

*1 This value is for use of the coaxial cable 3C-2V (JIS C 3501).
For specifications of the cable, refer to the GOT2000 Series Connection Manual for a controller used.
*2 This value differs depending on the cable used.
*3 When opening or closing the battery cover: 72 (2.83) or more.

■For GT2505-V

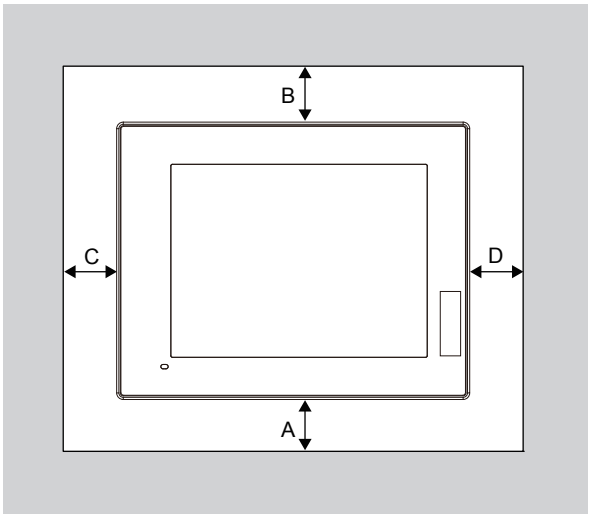

Horizontal

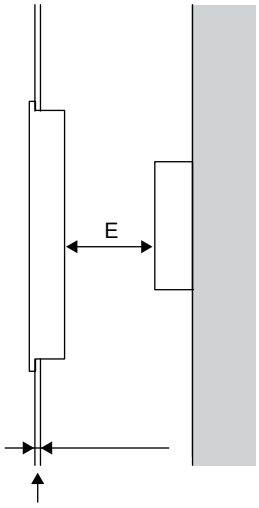

Panel thickness: 1.6 mm to 4 mm
(0.06 to 0.16inch)

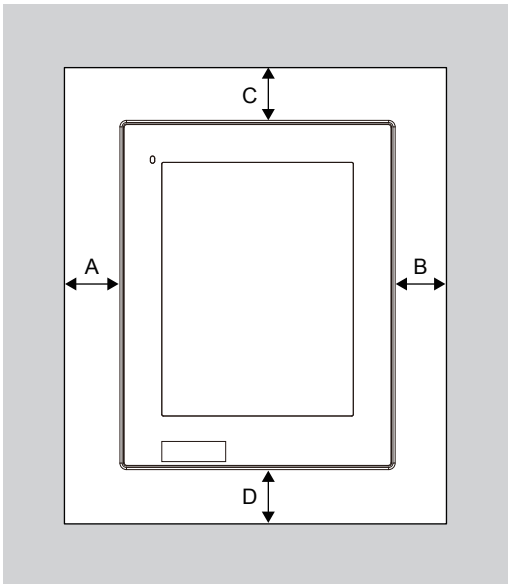

Vertical

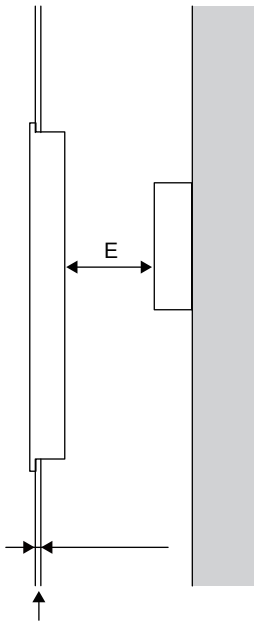

Panel thickness: 1.6 mm to 4 mm
(0.06 to 0.16inch)

The following tables list the distance required between the GOT and the other devices.
The dimensions within the parentheses apply when no equipment generating radiated noise (such as a contactor) or heat is installed near the GOT.
However, always keep the ambient temperature of the GOT to 55 °C or lower.
Unit: mm (inch)

Item		GT25
		GT2505-V
A		50 (1.97) or more [20 (0.79) or more]
B		Horizontal: 80 (3.15) or more [20 (0.79) or more] Vertical: 50 (1.97) or more [20 (0.79) or more]
C		Horizontal: 50 (1.97) or more [20 (0.79) or more] Vertical: 80 (3.15) or more [20 (0.79) or more]
D		50 (1.97) or more [20 (0.79) or more]
E *1	When the SD card is used	100 (3.94) or more [100 (3.94) or more]
	When the SD card is not used	100 (3.94) or more [20 (0.79) or more]

*1 When opening or closing the battery cover: 72 (2.83) or more.

GT2512F-S, GT2510F-V, GT2508F-V

Depending on the units and cables used for the GOT, the distance more than the described dimensions may be required.
Install the GOT with consideration of the connector dimensions and the cable bend radius.
For the cable pull-out distance from the bottom of the GOT, refer to the following.
☞ Page 422 Cable Bend Radius for GT25 with an Extension Unit
For the vertical installation, install the GOT so that the vertical installation arrow printed on the GOT rear face points upward.
☞ Page 130 GT25-S, GT25-V

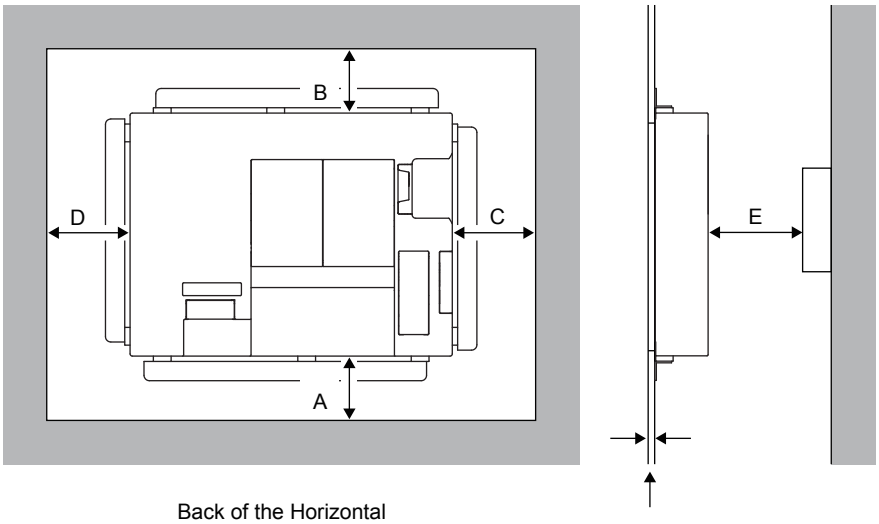

Back of the Horizontal

Panel thickness: 1.5 mm to 4 mm
(0.06 to 0.16inch)

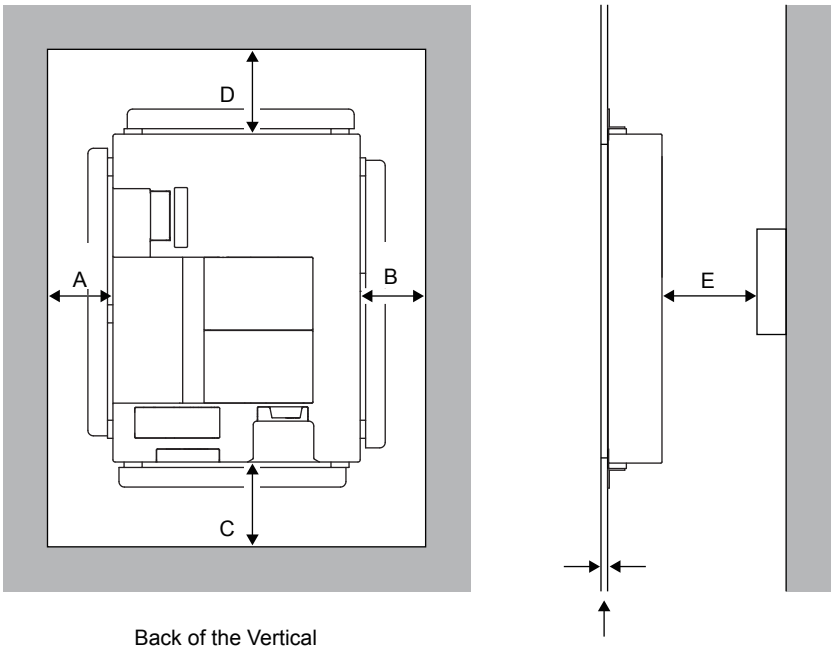

Back of the Vertical

Panel thickness: 1.5 mm to 4 mm
(0.06 to 0.16inch)

The following tables list the distance required between the GOT and the other devices.
The dimensions within the parentheses apply when no equipment generating radiated noise (such as a contactor) or heat is installed near the GOT.
However, always keep the ambient temperature of the GOT to 55 °C or lower.
Unit: mm (inch)

Item		GT25		
		GT2512F-S	GT2510F-V	GT2508F-V
A	GOT only	58 (2.28) or more [28 (1.10) or more]		58 (2.28) or more [39 (1.54) or more]
	Ethernet communication unit fitted	58 (2.28) or more [28 (1.10) or more]		
	Bus connection unit is fitted	58 (2.28) or more [28 (1.10) or more]		33 (1.30) or more [39 (1.54) or more]
	Serial connection unit is fitted	58 (2.28) or more [28 (1.10) or more]		
	CC-Link communication unit (GT15-J61BT13) fitted	58 (2.28) or more [28 (1.10) or more]		
	MELSECNET/H communication unit (coaxial) fitted *1	58 (2.28) or more [48 (1.89) or more]	58 (2.28) or more [55 (2.17) or more]	77 (3.03) or more
	MELSECNET/H communication unit (optical) fitted *2	58 (2.28) or more [28 (1.10) or more]		
	CC-Link IE TSN communication unit fitted	58 (2.28) or more [28 (1.10) or more]		
	CC-Link IE Controller Network communication unit fitted	58 (2.28) or more [28 (1.10) or more]		
	CC-Link IE Field Network communication unit fitted	58 (2.28) or more [28 (1.10) or more]		
	Printer unit fitted	58 (2.28) or more [28 (1.10) or more]		
	External I/O unit fitted	58 (2.28) or more [28 (1.10) or more]		
	Sound output unit fitted	58 (2.28) or more [28 (1.10) or more]		
B		Horizontal: 88 (3.46) or more [28 (1.10) or more] Vertical: 58 (2.28) or more [28 (1.10) or more]		
C	When the SD card is used	58 (2.28) or more [28 (1.10) or more]		58 (2.28) or more
	When the SD card is not used	58 (2.28) or more [28 (1.10) or more]		
D		Horizontal: 58 (2.28) or more [28 (1.10) or more] Vertical: 88 (3.46) or more [28 (1.10) or more]		
E *3		100 (3.94) or more [20 (0.79) or more]		

*1 This value is for use of the coaxial cable 3C-2V (JIS C 3501).
For specifications of the cable, refer to the GOT2000 Series Connection Manual for a controller used.
*2 This value differs depending on the cable used.
*3 When opening or closing the battery cover: 72 (2.83) or more.

GT23

Depending on the units and cables used for the GOT, the distance more than the described dimensions may be required.
Install the GOT with consideration of the connector dimensions and the cable bend radius.
For the vertical installation, install the GOT so that the vertical installation arrow printed on the GOT rear face points upward.
☞ Page 142 GT23

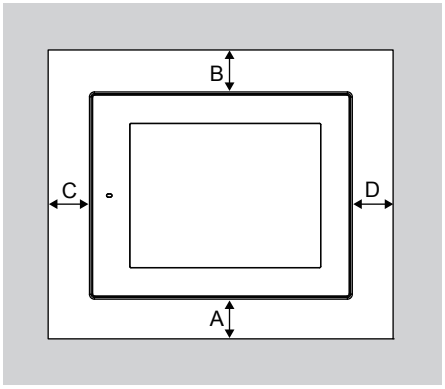

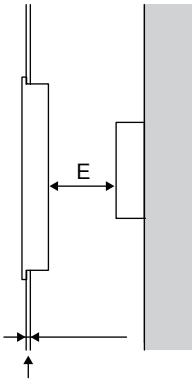

Horizontal

Panel thickness: 1.6 mm to 4 mm(0.06 to 0.16inch)

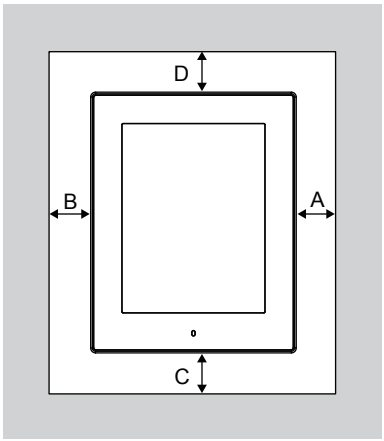

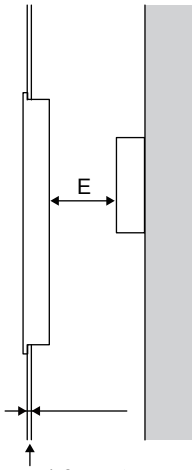

Vertical

Panel thickness: 1.6 mm to 4 mm(0.06 to 0.16inch)

Unit: mm (inch)

Item		GT23	
		GT2310-V	GT2308-V
A		48 (1.89) or more [18 (0.71) or more]	
B		Horizontal: 78 (3.07) or more [18 (0.71) or more] Vertical: 50 (1.97) or more [20 (0.79) or more]	
C	When the SD card is used	Horizontal: 50 (1.97) or more [20 (0.79) or more] Vertical: 80 (3.15) or more [20 (0.79) or more]	Horizontal: 50 (1.97) or more Vertical: 80 (3.15) or more [50 (1.97) or more]
	When the SD card is not used	Horizontal: 50 (1.97) or more [20 (0.79) or more] Vertical: 80 (3.15) or more [20 (0.79) or more]	
D		50 (1.97) or more [20 (0.79) or more]	
E *1		100 (3.94) or more [20 (0.79) or more]	

*1 When opening or closing the battery cover: 72 (2.83) or more

MEMO

GT21

Depending on the units and cables used for the GOT, the distance more than the described dimensions may be required. Install the GOT with consideration of the connector dimensions and the cable bend radius.

For the vertical installation, install the GOT so that the power supply terminal, which is located on the GOT rear face, is at the lower side.

When installing GT2107-W vertically, make sure that the power supply terminal on the GOT rear face is at the upper side.

☞ Page 144 GT21

Horizontal

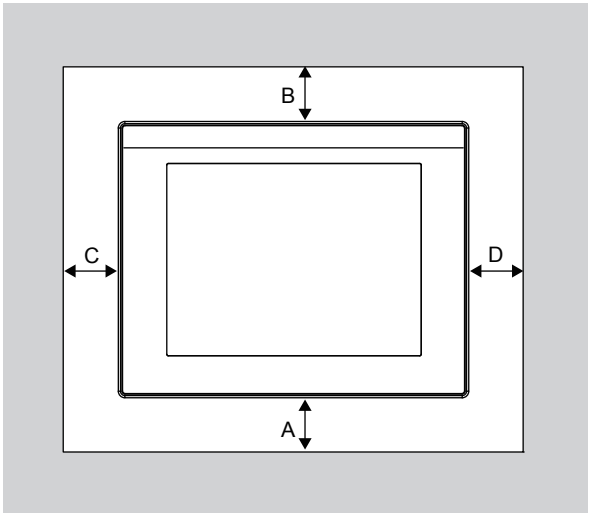

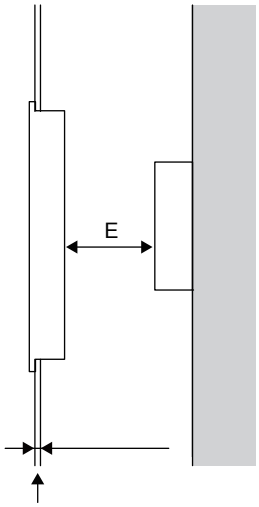

Panel thickness: 1 mm to 4 mm (0.06 to 0.16 inch)

Vertical (except GT2107-W)

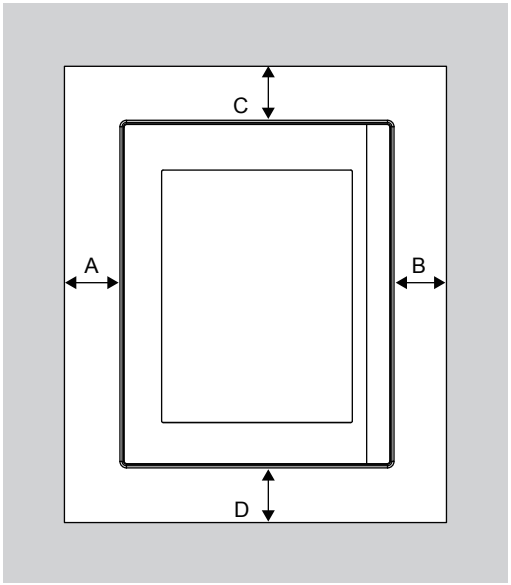

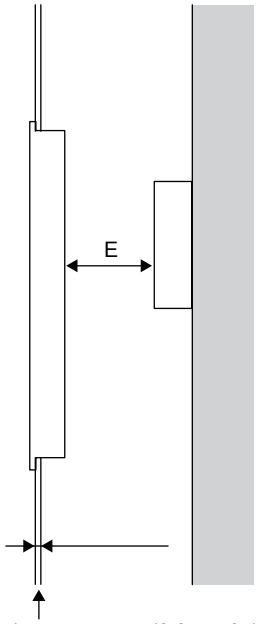

Panel thickness: 1 mm to 4 mm (0.04 to 0.16 inch)

Vertical (For GT2107-W)

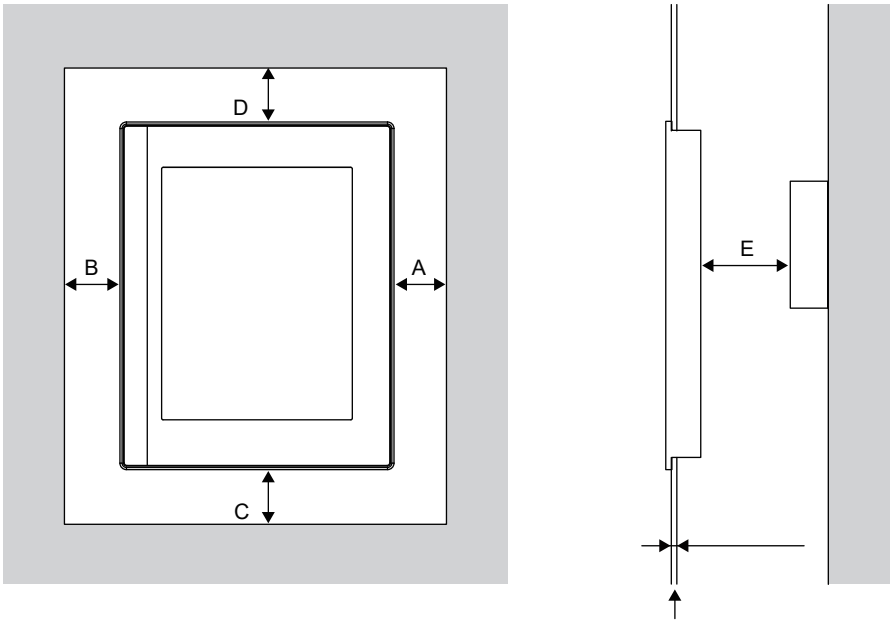

Panel thickness: 1 mm to 4 mm (0.04 to 0.16 inch)

The following table lists the distance required between the GOT and the other devices.

The dimensions within the parentheses apply when no equipment generating radiated noise (such as a contactor) or heat is installed near the GOT.

Unit: mm (inch)

• For GT2107-W, GT2104-R, GT2104-P, GT2103-P

Item		GT21
		GT2107-W GT2104-R GT2104-P GT2103-P
A *2		50 (1.97) or more [20 (0.79) or more]
B		50 (1.97) or more [20 (0.79) or more]
C	When the SD card is used	50 (1.97) or more
	When the SD card is not used	50 (1.97) or more [20 (0.79) or more]
D		50 (1.97) or more
E *1		80 (3.15) or more [20 (0.79) or more]

*1 For GT2104-RTBD, GT2104-PMBDS, GT2104-PMBDS2, GT2103-PMBDS, and GT2103-PMBDS2, a distance of 80 mm (3.15 inches) or more is required to connect an RS-232 cable or personal computer connection cable to the GOT rear face.
When a user-created RS-232 cable is connected to the connector terminal block at the rear face of GT2104-RTBD, a distance of 20 mm (0.79 inch) or more is required.

*2 For GT2107-W, a distance of 60 mm (2.36 inches) or more is required to connect an RS-485 cable or RS-232 cable.

• For GT2105-Q

Item		GT21
		GT2105-Q
A		50 (1.97) or more [20 (0.79) or more]
B		Horizontal: 80 (3.15) or more [20 (0.79) or more] Vertical: 50 (1.97) or more [20 (0.79) or more]
C		Horizontal: 50 (1.97) or more [20 (0.79) or more] Vertical: 80 (3.15) or more [20 (0.79) or more]
D		50 (1.97) or more [20 (0.79) or more]
E	When the SD card is used	100 (3.94) or more
	When the SD card is not used	100 (3.94) or more [20 (0.79) or more]

6.5 Control Panel Inside Temperature and GOT Installation Angle

Install the GOT with its display section positioned as shown below.

GT27

Installing the GOT horizontally

- When the GOT is installed at any angle from 60° to 105°, the control panel inside temperature must be 55°C or lower.
- When the GOT is installed at any angle outside the above range, the control panel inside temperature must be 40°C or lower.

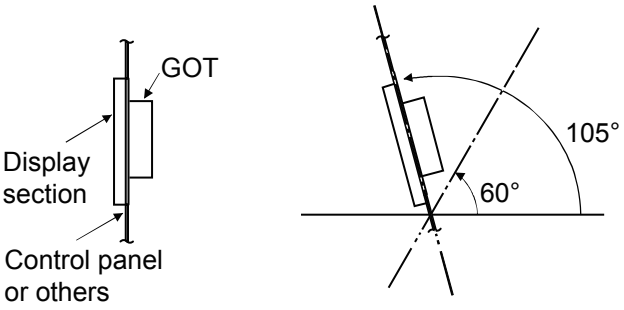

Point

Ensure that the control panel inside temperature does not exceed the above-mentioned temperatures. Otherwise, the product life can be shortened.

Installing the GOT vertically

- When the GOT is installed at a 90° angle, the control panel inside temperature must be 55°C or lower.
- When the GOT is installed at any angle outside the above range, the control panel inside temperature must be 40°C or lower.

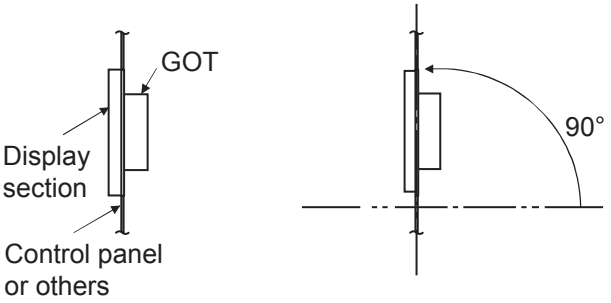

Point

Ensure that the control panel inside temperature does not exceed the above-mentioned temperatures. Otherwise, the product life can be shortened.

Installing the GOT horizontally

- When the GOT is installed at any angle from 60° to 105°, the control panel inside temperature must be 55°C or lower.
- When the GOT is installed at any angle outside the above range, the control panel inside temperature must be 40°C or lower.

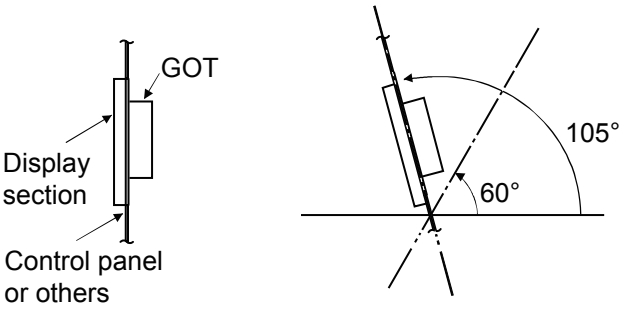

Point

Ensure that the control panel inside temperature does not exceed the above-mentioned temperatures. Otherwise, the product life can be shortened.

Installing the GOT vertically

- When the GOT is installed at a 90° angle, the control panel inside temperature must be 55°C or lower.
- When the GOT is installed at any angle outside the above range, the control panel inside temperature must be 40°C or lower.

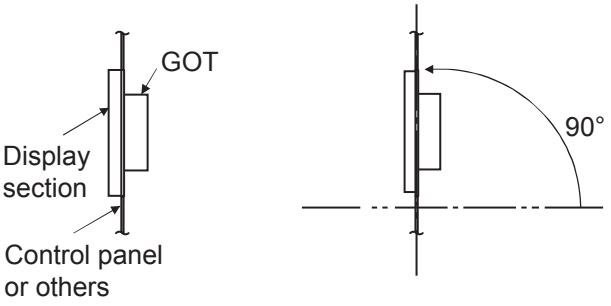

Point

Ensure that the control panel inside temperature does not exceed the above-mentioned temperatures. Otherwise, the product life can be shortened.

Installing the GOT horizontally

- When the GOT is installed at any angle from 60° to 105°, the control panel inside temperature must be 65°C or lower.
- When the GOT is installed at any angle outside the above range, the control panel inside temperature must be 50°C or lower.

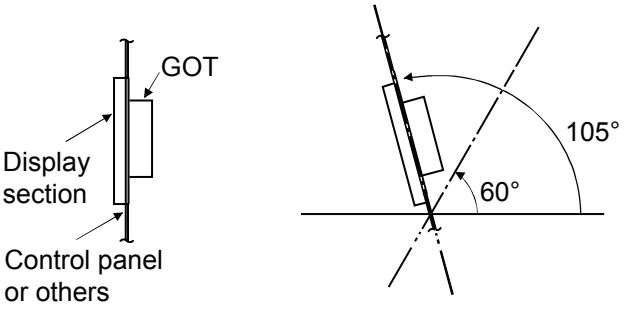

Point

Ensure that the control panel inside temperature does not exceed the above-mentioned temperatures. Otherwise, the product life can be shortened.

Installing the GOT vertically

- When the GOT is installed at a 90° angle, the control panel inside temperature must be 65°C or lower.
- When the GOT is installed at any angle outside the above range, the control panel inside temperature must be 50°C or lower.

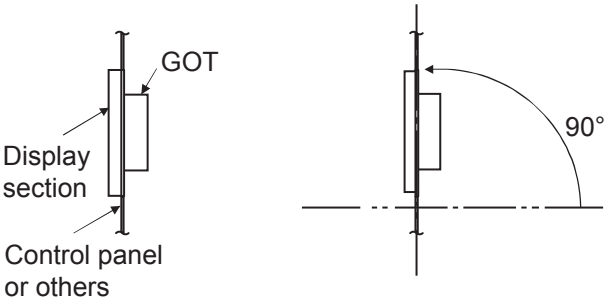

Point

Ensure that the control panel inside temperature does not exceed the above-mentioned temperatures. Otherwise, the product life can be shortened.

GT2512-S, GT2510-V, GT2508-V, GT2505-V

Installing the GOT horizontally

- When the GOT is installed at any angle from 60° to 105°, the control panel inside temperature must be 55°C or lower.
- When the GOT is installed at any angle outside the above range, the control panel inside temperature must be 40°C or lower.

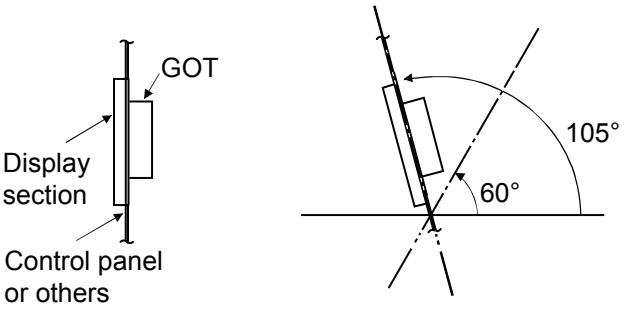

Point

Ensure that the control panel inside temperature does not exceed the above-mentioned temperatures. Otherwise, the product life can be shortened.

Installing the GOT vertically

- When the GOT is installed at a 90° angle, the control panel inside temperature must be 55°C or lower.[*1]
- When the GOT is installed at any angle outside the above range, the control panel inside temperature must be 40°C or lower.

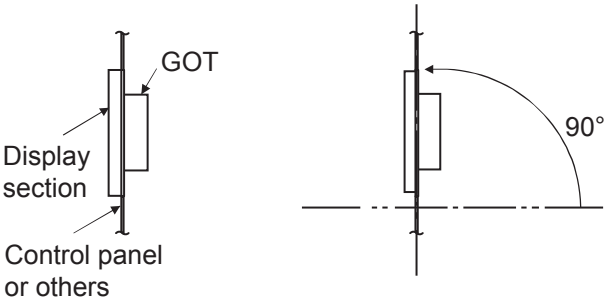

*1 For GT2505-V, the control panel inside temperature must be within 50°C.

Point

Ensure that the control panel inside temperature does not exceed the above-mentioned temperatures. Otherwise, the product life can be shortened.

GT2512F-S, GT2510F-V, GT2508F-V

Installing the GOT horizontally

- When the GOT is installed at any angle from 60° to 105°, the control panel inside temperature must be 55°C or lower.
- When the GOT is installed at any angle outside the above range, the control panel inside temperature must be 40°C or lower.

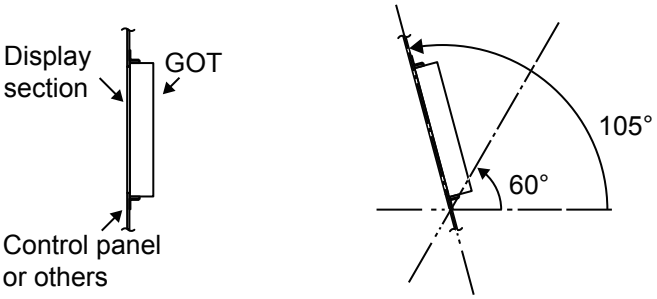

Point

Ensure that the control panel inside temperature does not exceed the above-mentioned temperatures. Otherwise, the product life can be shortened.

Installing the GOT vertically

- When the GOT is installed at a 90° angle, the control panel inside temperature must be 55°C or lower.
- When the GOT is installed at any angle outside the above range, the control panel inside temperature must be 40°C or lower.

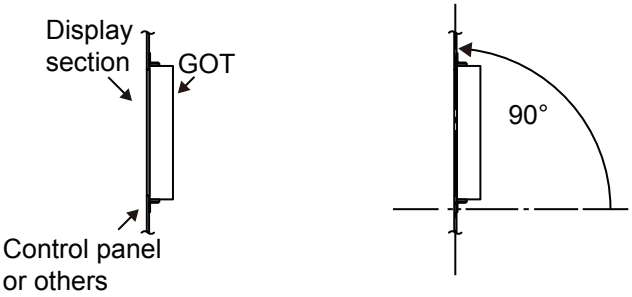

Point

Ensure that the control panel inside temperature does not exceed the above-mentioned temperatures. Otherwise, the product life can be shortened.

GT23

Regardless of the installation orientation, install the GT23 so that the following conditions are satisfied.

- When the GOT is installed at any angle from 60° to 105°, the control panel inside temperature must be 55°C or lower.
- When the GOT is installed at any angle outside the above range, the control panel inside temperature must be 40°C or lower.

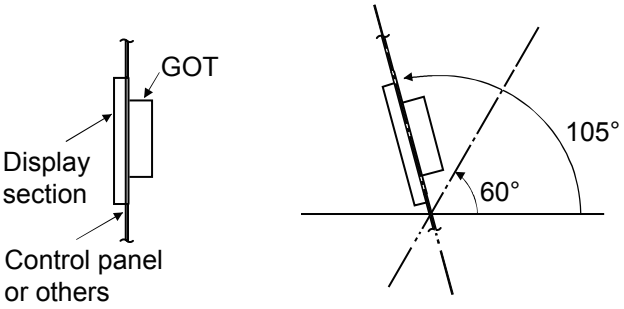

Point

Ensure that the control panel inside temperature does not exceed the above-mentioned temperatures. Otherwise, the product life can be shortened.

GT21

Installing the GOT horizontally

- When the GOT is installed at any angle from 60° to 105°, the control panel inside temperature must be 55°C or lower.
- When the GOT is installed at any angle outside the above range, the control panel inside temperature must be 40°C or lower.

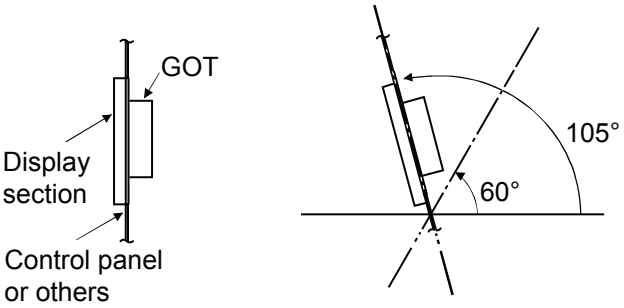

Point

Ensure that the control panel inside temperature does not exceed the above-mentioned temperatures. Otherwise, the product life can be shortened.

Installing the GOT vertically

- When the GOT is installed at any angle from 60° to 105°, the control panel inside temperature must be 50°C or lower.
- When the GOT is installed at any angle outside the above range, the control panel inside temperature must be 40°C or lower.

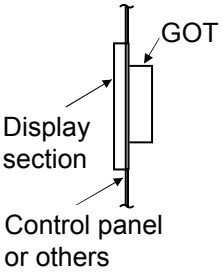

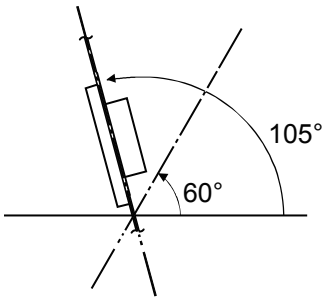

Point

Ensure that the control panel inside temperature does not exceed the above-mentioned temperatures. Otherwise, the product life can be shortened.

6.6 Installing the GOT

Install the GOT in the following procedure.

For the panel cut dimensions for the GOT, refer to the following.

☞ Page 172 Panel Cut Dimensions

GT27, GT25, GT23

The following shows an installation example for the horizontal direction.

For the vertical installation, install the GOT so that the vertical installation arrow printed on the GOT rear face points upward.

☞ Page 121 PART NAMES AND SETTINGS

GT27, GT2512-WX, GT2512-S, GT2510-WX, GT2510-V, GT2508-V, GT2507-W, GT2507T-W, GT23

1. Insert the GOT rear face into the panel opening.

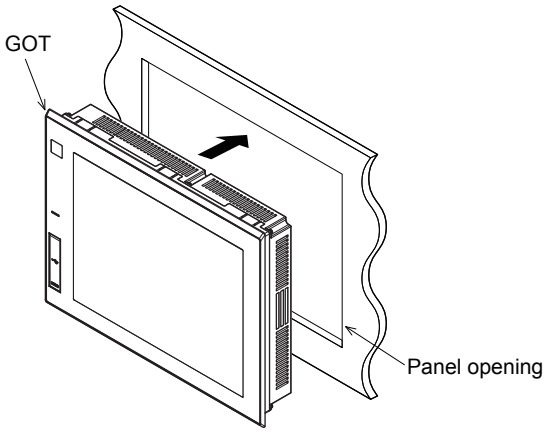

2. While positioning a fitting on the mounting hole of the GOT, tighten a screw within the specified torque range (0.36 N·m to 0.48 N·m).

Tightening the screw with a torque exceeding the specified torque range may deform the GOT front panel, causing the protective sheet to become crinkled.

For GT2715-X (8 fittings)

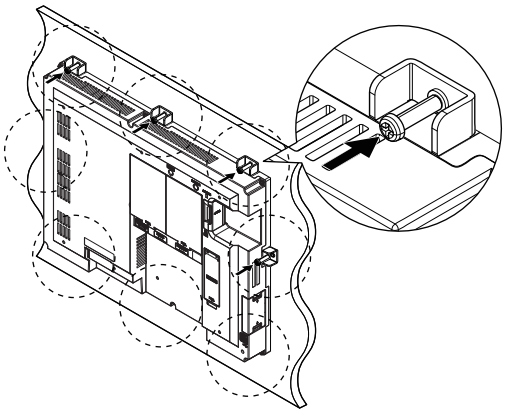

For GT27 except GT2715-X, GT25, and GT23 (4 fittings)

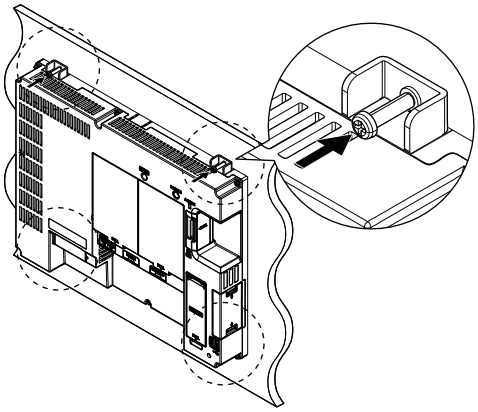

3. Remove the protective film from the GOT.

GT2512F-S, GT2510F-V, GT2508F-V

To fasten the fittings on the control panel, studs are neccessary.

For the details of panel cutting dimensions and studs, refer to the following.

☞ Page 172 Panel Cut Dimensions

☞ Page 179 Stud

The following table shows the material and surface treatment of the control panel recommended for attaching the environmental protection sheet..

Item	Description
Material	Stainless *1 or aluminum *1 or steel *2
Surface roughness	Ra0.2 to 0.5 (μm)

*1 When you coat the environmental protection sheet, use melamine resins or acrylic resins.

*2 The environmental protection sheet must be coated with melamine resins or acrylic resins.

Check that no dirt or damage is on the control panel on which the environmental protection sheet is attached.

Since the environmental protection sheet cannot be reattached, make sure to check the attachment method and attach the sheet carefully.

After removing the protective film from the GOT, make sure that no dust or other substances adhere to the display section.

Check that the GT25 open frame model is installed properly, and then remove the protective film from the GOT.

Do not conduct this work in a dusty place, or foreign substances may adhere to the display section.

The following shows the procedure for installing GT2512F-S as an example. In this example, the supplied fittings are installed on the top and bottom of the GOT, and the control panel thickness is 3 mm.

1. Install the supplied fittings on the top and bottom of the GOT with screws.

Each fitting has two types of holes as shown below.Use the appropriate type of holes according to the control panel thickness.

Hole A: for the control panel thickness 1.5 mm to 3.0 mm

Hole B: for the control panel thickness 2.0 mm to 4.0 mm

When installing the fittings on the GOT, you are recommended to put a cloth or others under the GOT to prevent the display section from being damaged.

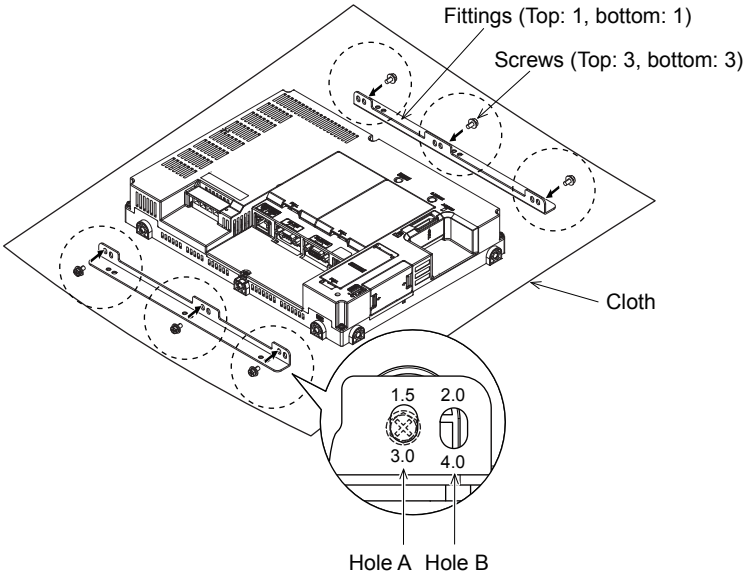

2. Align the installation holes of the fittings with the studs, and insert the studs in the holes.

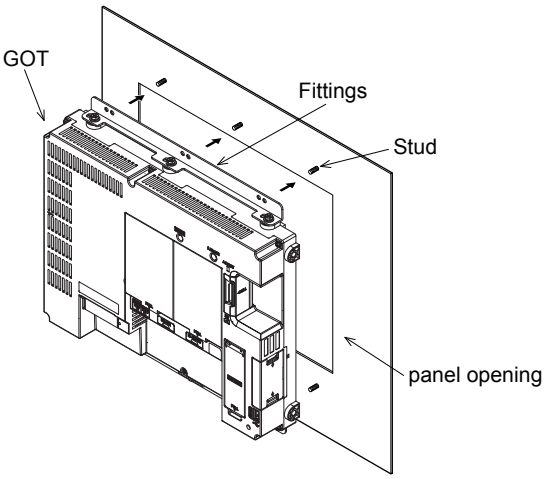

3. Tighten nuts on the studs in the specified torque range (0.8 N•m to 0.9 N•m) with a wrench for M4 nuts.
Loosen the screws in the slotted holes of the fittings, and adjust the positons of the screws to make the GOT display section and the control panel surface be in the same plane.

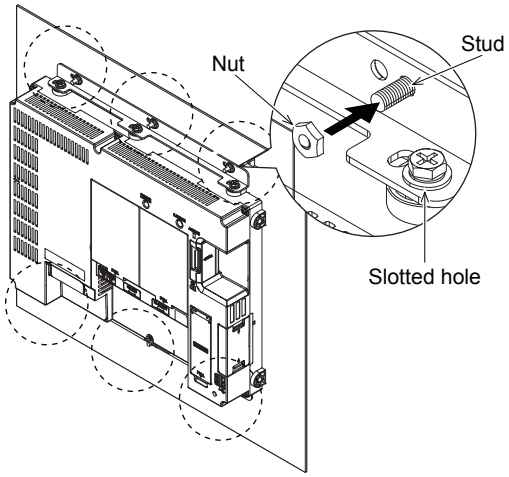

To attach the environmental protection sheet (sold separately), proceed to step 4.
To attach a user-prepared environmental protection sheet, follow the maunal of the sheet used.

4. Remove the inner part of the supplied stencil.
Position the stencil on the panel opening, and attach the stencil using backside double-sided tape in four places.

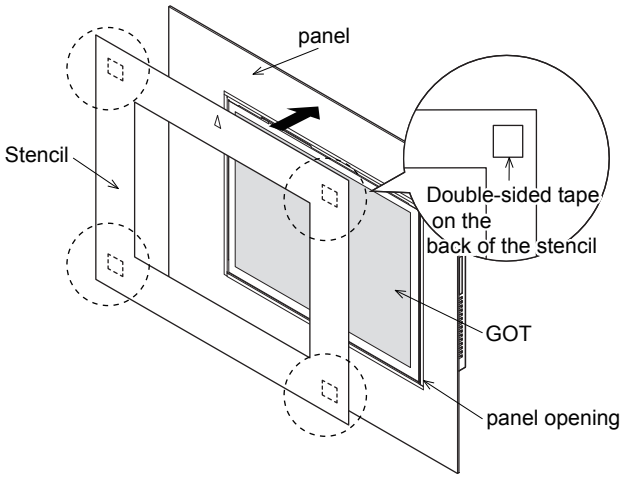

Check that the arrow on the stencil points in the direction as shown below.
• For the horizontally-oriented GOT, the arrow on the stencil must point upward.
• For the vertically-oriented GOT, the arrow on the stencil must point leftward.

5. Mark the four corners of the stencil on the control panel with a pencil or others.
Remove the stencil.

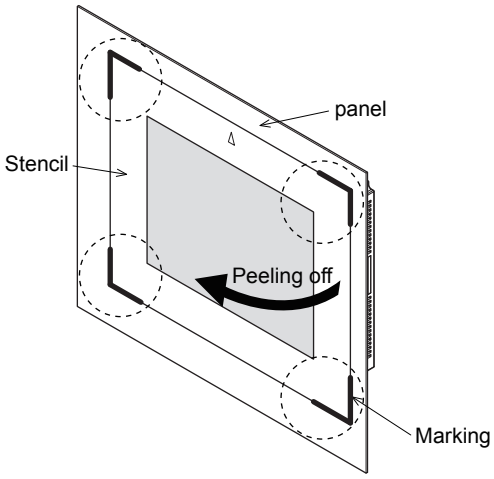

6. Remove the protective film from the GOT, and make sure that no dust or other substances adhere to the display section.

7. Peel off a part of the release paper on the back of the environmental protection sheet.
Do not touch the adhesive part of the sheet where the release paper is peeled off. Align the sheet with the four markings on the control panel, and attach the peeled off part of the sheet to the control panel.

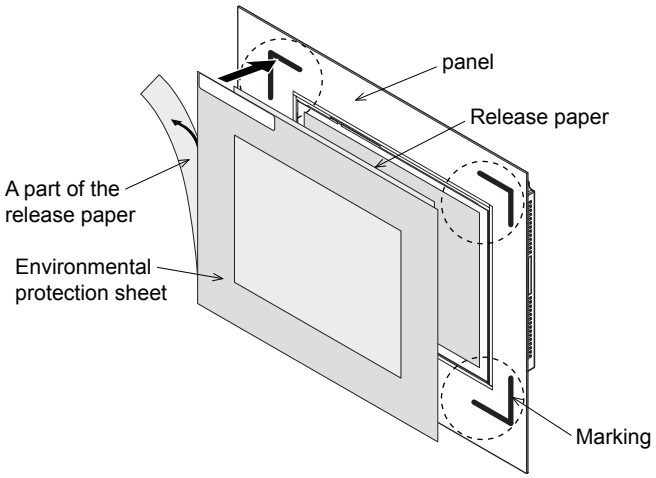

8. Peel off the remainder of the release paper, and attach the whole environmental protection sheet to the control panel. Make sure to attach the sheet from the attached part in step 7, and fit the sheet onto the control panel without leaving any air between them.

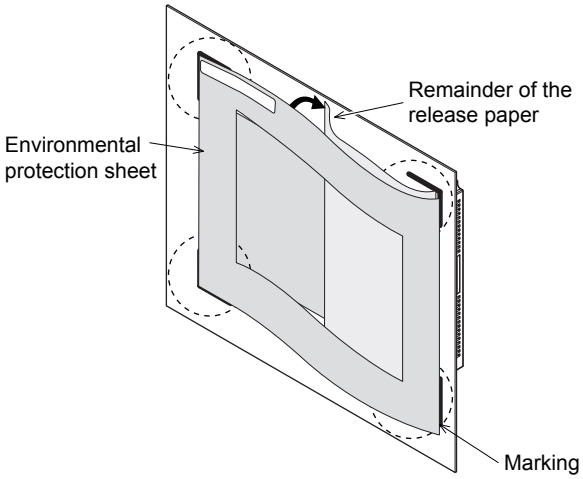

9. Erase the markings.

10. Apply enough pressure to the adhesive part of the environmental protection sheet.
(Roll a roller back and forth two times with a load of 2 kg.)
To ensure adequate adhesive strength, you are recommended to use the GOT about 24 hours later after the environmental protection sheet is attached.
Check that the environmental protection sheet has no wrinkle, dirt, or others, and then remove the protective film from the sheet.

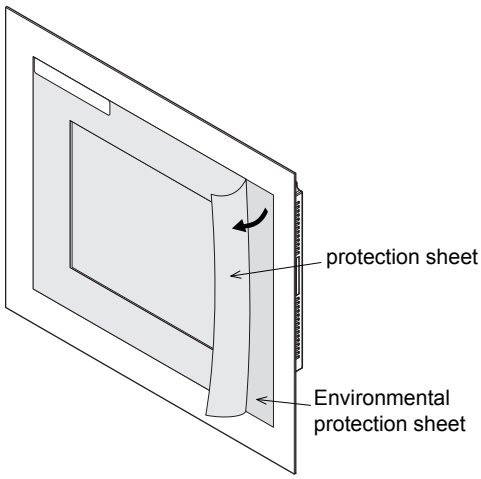

GT2505-V

For the vertical installation, check that the vertical installation arrow mark on the GOT rear face points upward.

1. Install a packing to the packing installation groove on the GOT rear face.

Fit the thin side of the packing in the packing installation groove.

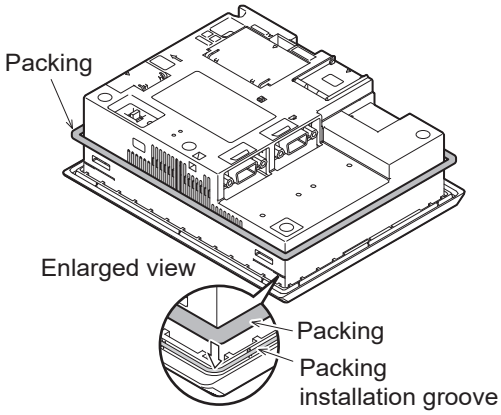

2. Insert the GOT rear face into the panel opening.

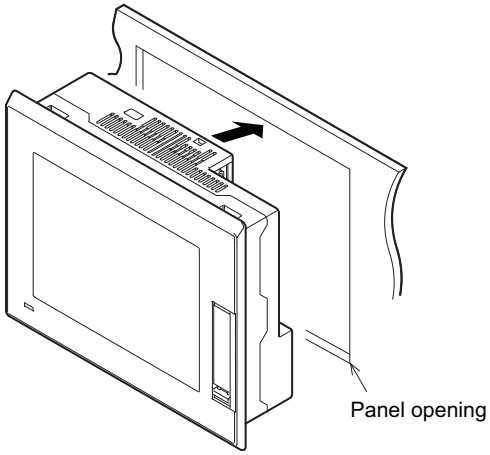

3. Fix the GOT.

Insert the hook of an installation fitting (supplied) into the mounting hole of the GOT.

Tighten the supplied screws within the specified torque range (0.36 N•m to 0.48 N•m) to fix the GOT

Fix the GOT using 4 fittings at the top and the bottom of the GOT.

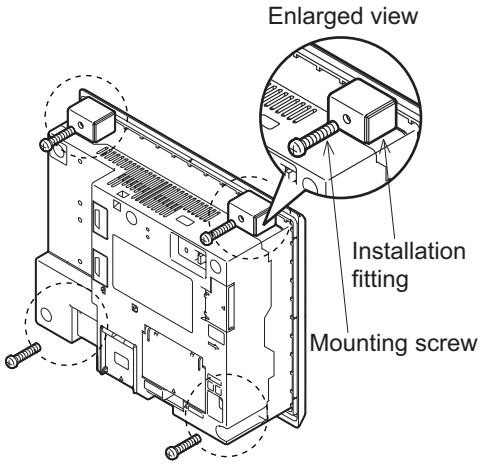

Point

Precautions for installing the GOT

• Tightening torque of the mounting screws

Tighten the mounting screws within the specified torque range.

Undertightening can cause the GOT to drop.

In addition, waterproof effect and oilproof effect may not be produced.

Overtightening may damage the GOT or distort the panel, causing wrinkles on the surface of the display section. The wrinkles may lower visibility and lead to an incorrect input to the touch panel.

The distorted GOT or panel may compromise the waterproof and oilproof performance.

• Mounting screw tightening procedure

Tighten each of the four screws gradually and evenly.

Concentration of excessive force on a fitting may damage the GOT or distort the panel.

Tighten the mounting screws at right angles to the surface of the panel. (See Figure 1 below.)

If mounting screws are not at right angles to the surface of the panel, excessive force will be applied and may damage the GOT. (See Figure 2 below.)

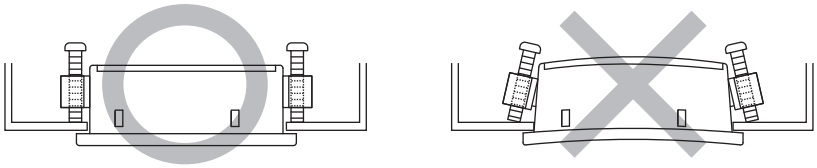

1. Good example

2. Bad example

4. The GOT in the factory shipment state has a protective film on the display section.
After installing the GOT, remove the film.

GT21

The following shows an installation example for the horizontal direction.
For the vertical installation, install the GOT so that the power supply terminal, which is located on the GOT rear face, is at the lower side.
When installing GT2107-W vertically, make sure that the power supply terminal on the GOT rear face is at the upper side.
☞ Page 121 PART NAMES AND SETTINGS

GT21

Point

Cautions for an installation panel
Use a panel that has no warpage, damage, and unevenness on its surface. Failure to do so may not result in waterproof effect.
Determine the panel thickness considering the panel strength.
(For example, even though the panel has thickness within the range, the strength may be insufficient depending on the material and size. Insufficient panel strength may result in warpage depending on the installation position of the GOT and other devices.)

1. Install a packing to the packing installation groove on the GOT rear face. (except GT2107-W)

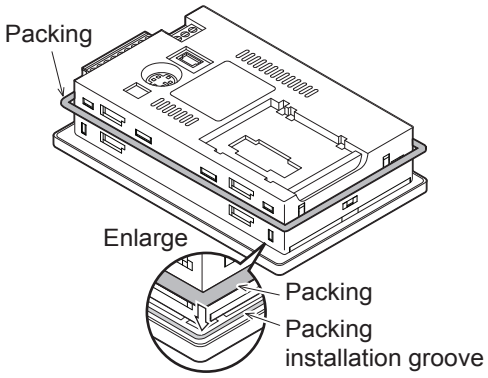

2. Insert the GOT rear face into the panel opening. (The following shows an example of the horizontal installation.)

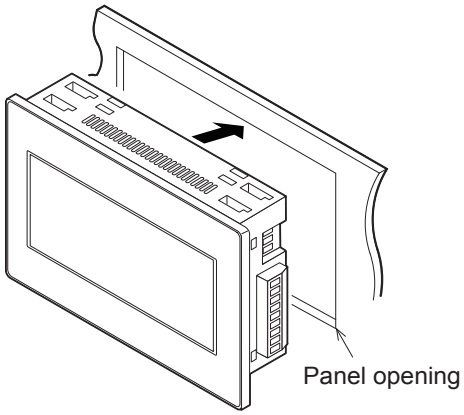

3. For GT2107-W

Insert the hook of an installation fitting (supplied) into the mounting hole of the GOT.

Tighten the supplied screws within the specified torque range (0.36 N•m to 0.48 N•m) to fix the GOT.

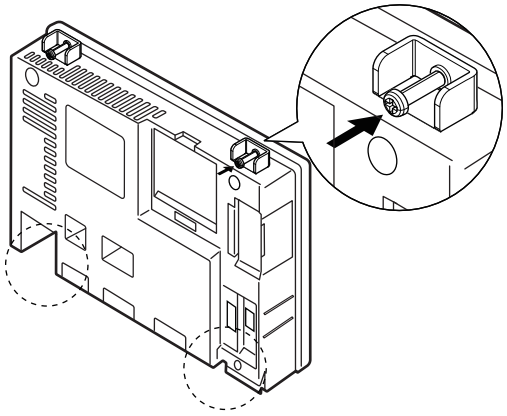

For GT2105

Insert the hook of an installation fitting (supplied) into the mounting hole of the GOT.

Tighten the supplied screws within the specified torque range (0.3 N•m to 0.5 N•m) to fix the GOT.

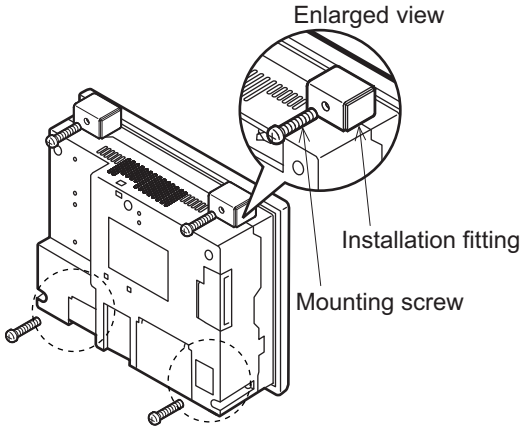

For GT2104, GT2103

Insert the hook of an installation fitting (supplied) into the mounting hole of the GOT.

Slide the installation fitting toward the GOT rear face.

Then, viewing from the GOT rear face, slide the fitting to the left to fix, and tighten a screw within the specified torque range (0.20 N•m to 0.25 N•m).

Fix the GOT using 4 fittings at the top and the bottom of the GOT.

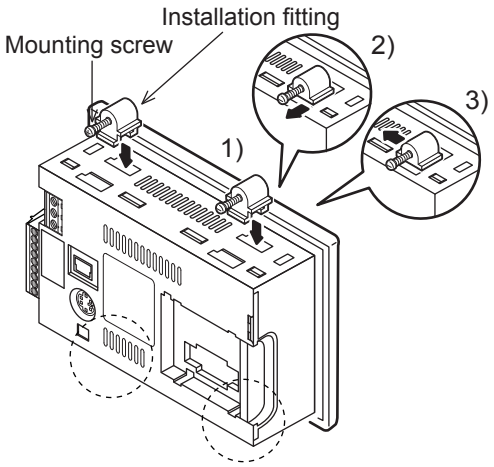

Point

Precautions for installing the GOT

• Tightening torque of the mounting screws

Tighten the mounting screws within the specified torque range.

Undertightening can cause the GOT to drop.

In addition, waterproof effect and oilproof effect may not be produced.

Overtightening may damage the GOT or distort the panel, causing wrinkles on the surface of the display section. The wrinkles may lower visibility and lead to an incorrect input to the touch panel.

The distorted GOT or panel may compromise the waterproof and oilproof performance.

• Mounting screw tightening procedure

Tighten each of the four screws gradually and evenly.

Concentration of excessive force on a fitting may damage the GOT or distort the panel.

Tighten the mounting screws at right angles to the surface of the panel. (See Figure 1 below.)

If mounting screws are not at right angles to the surface of the panel, excessive force will be applied and may damage the GOT. (See Figure 2 below.)

If the GOT is powered on with an incorrect input on the bottom right of the touch panel due to distortion, the message [Please install the package data.] appears.

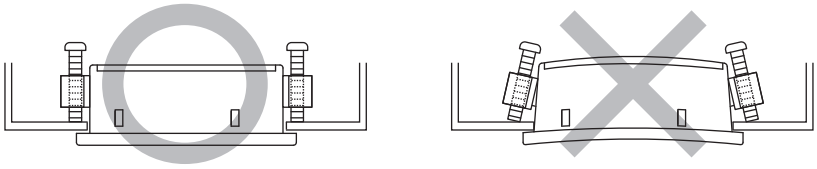

1. Good example

2. Bad example

4. The GOT in the factory shipment state has a protective film on the display section.

After installing the GOT, remove the film.

6.7 Removing the GOT

The following shows the procedure for removing the GOT.

GT27, GT25, GT23

GT27, GT2512-WX, GT2512-S, GT2510-WX, GT2510-V, GT2508-V, GT2507-W, GT2507T-W, GT2505-V, GT23

1. Remove the screws from the GOT.

Remove the fittings from the GOT.

For GT2715-X (8 fittings)

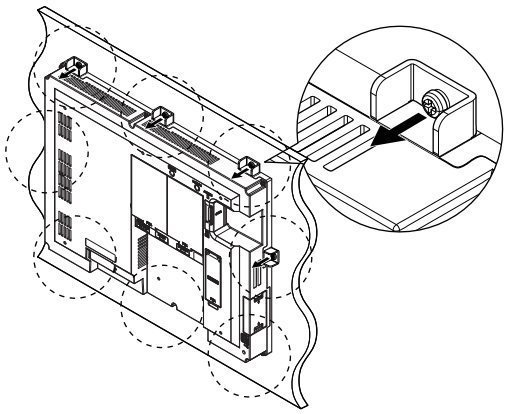

For GT27 except GT2715-X, GT25, and GT23 (4 fittings)

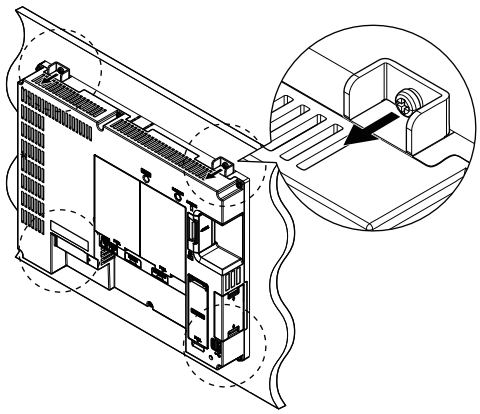

2. Remove the GOT from the panel opening.

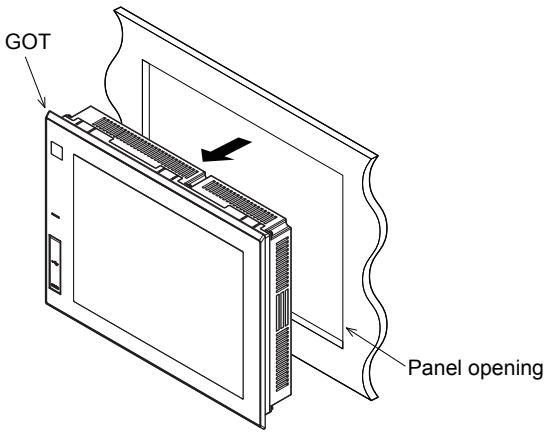

GT2512F-S, GT2510F-V, GT2508F-V

The following shows the procedure for removing GT2512F-S as an example.

1. Remove the nuts.

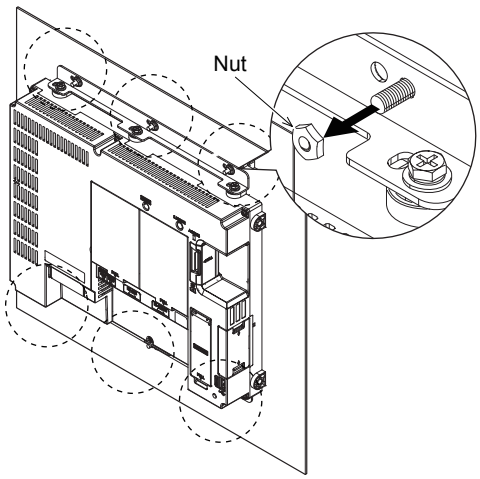

2. Remove the GOT from the panel opening.

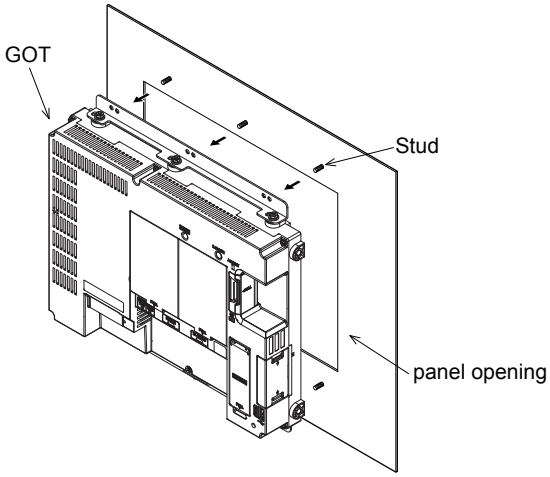

3. Remove the environmental protection sheet gradually.

If the sheet is difficult to remove, warm the sheet with a dryer or others.

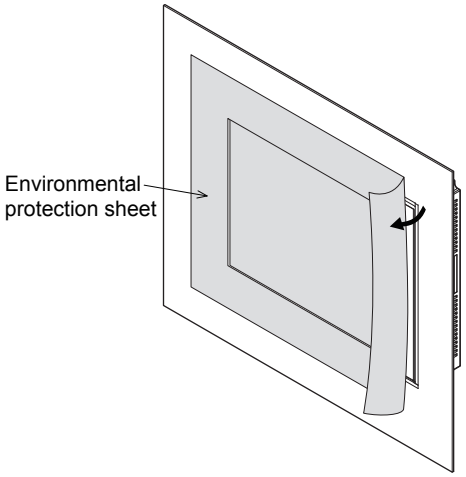

4. Remove the screws from the GOT.

Remove the fittings from the GOT.

You are recommended to put a cloth or others under the GOT to prevent the display section from being damaged.

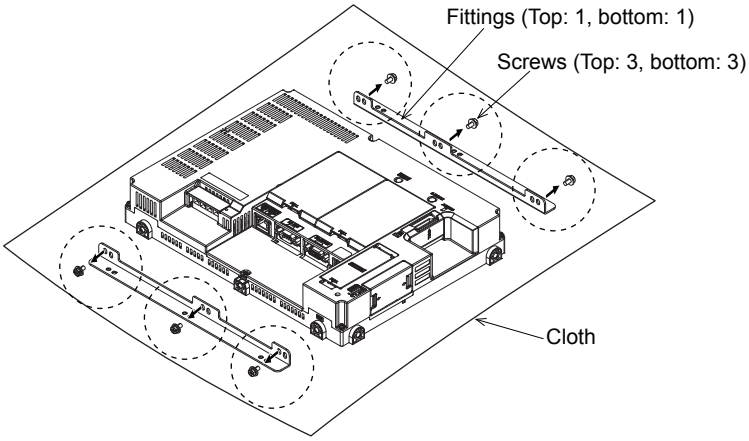

GT21

1. For GT2107-W

Remove the installation fitting on the GOT.

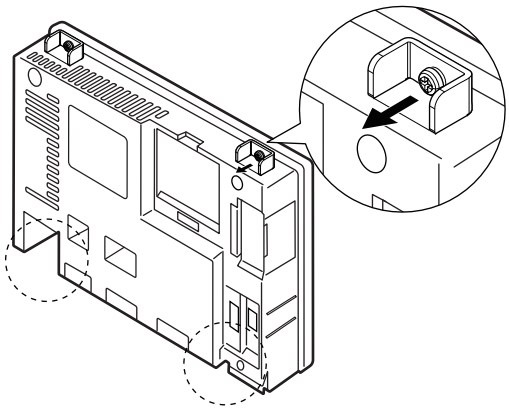

For GT2105

Remove the installation fitting on the GOT.

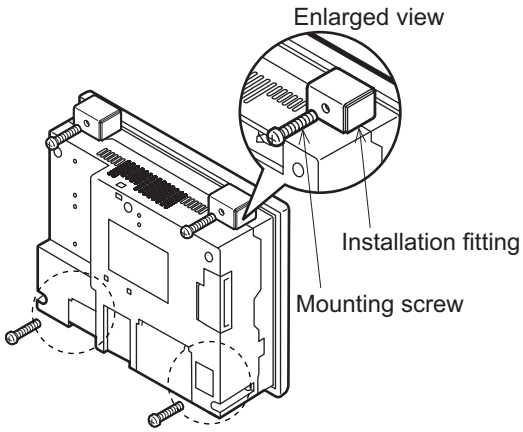

For GT2104, GT2103

Remove the mounting screws from the GOT installation fittings.

Remove the GOT installation fittings in the following order, 1) to 3).

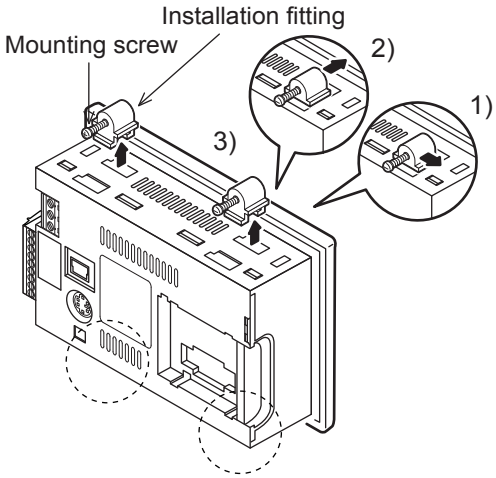

2. Remove the GOT from the panel opening.

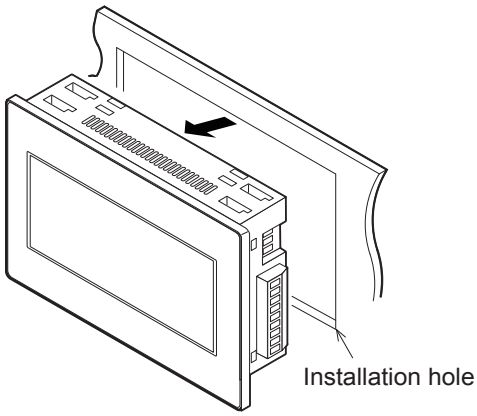

6.8 Handling the Handy GOT

Holding the Handy GOT in hand

When operating the Handy GOT with holding it in hand, put a hand under the hand strap on the back.
The hand strap length is adjustable.
When you carry or operate the Handy GOT, hold its body.
Carrying or operating the Handy GOT while holding its cable may damage the unit or cable.

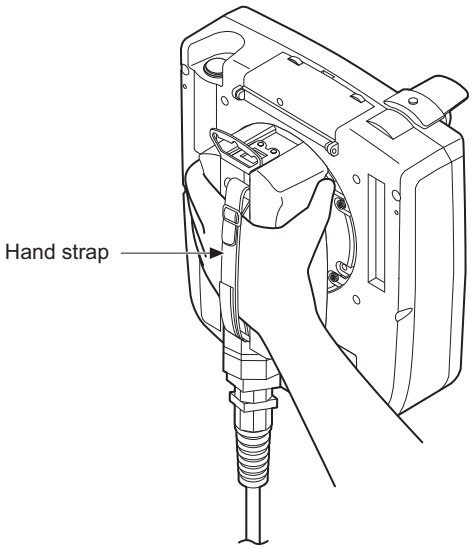

Changing the grip angle (GT2506HS-V only)

For GT2506HS-V, the grip angle is changeable.

1. Loosen the five grip angle changing screws on the back surface.

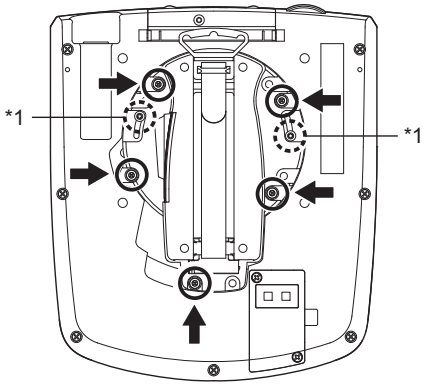

*1 Do not loosen or remove the screws (two screws).

2. Turn the grip.

Align the grip angle changing screws on the installation holes, and tighten the screws within the specified torque range (0.69 N•m to 0.88 N•m).

Too much tightening may cause damage.

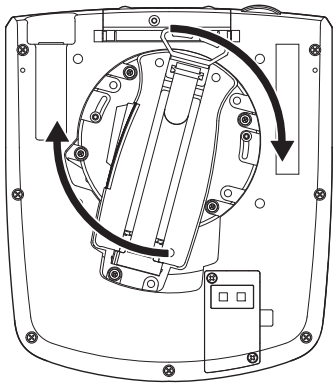

Hanging on a wall

Hanging the Handy GOT on a wall using the hook

When operating the Handy GOT with hanging on a wall, use the hook for hanging on a wall on the back.

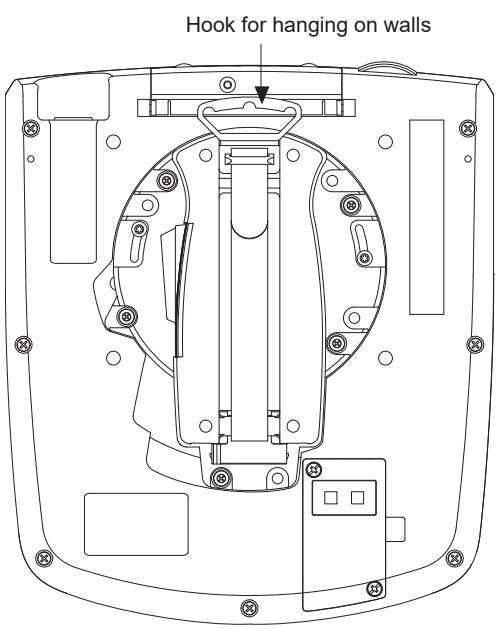

GT2506HS-V

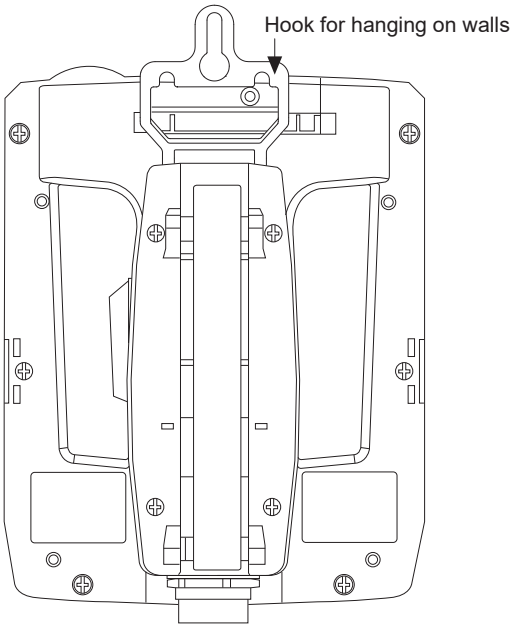

GT2505HS-V

The GOT and the connection cable put a load of about 1.5 kg to 5 kg on the fitting.

Take the above load into consideration to attach a fitting on the wall.

Model	Weight
GT2506HS-VTBD	1.2 kg (2.6 lb)
GT2505HS-VTBD	0.79 kg (1.7 lb)

Hanging the Handy GOT on a wall using a wall-mounting attachment (GT2505HS-V only)

GT2505HS-V can be fixed on a wall or table using a wall-mounting attachment.

For the wall-mounting attachment, refer to the following.

☞ Page 307 Wall-mounting Attachment

Placing on a desk or a floor

When placing the Handy GOT on a desk or floor, pay attention to the following.
Example) GT2506HS-V

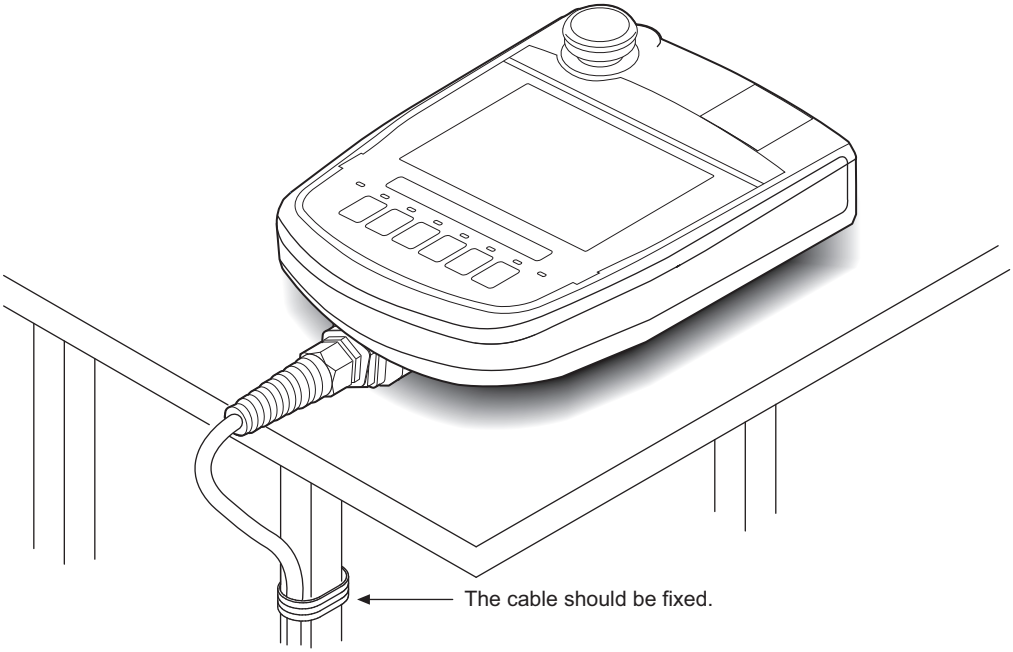

You are recommended to keep the GOT horizontal to the desk to prevent falling, and to fix the connection cable to the desk or others.

Installing to/removing from panel

Installing the Connector Conversion Box

■Configuration

The following shows the configuration for using the GOT that is connected to the connector conversion box on a control panel or operation panel.

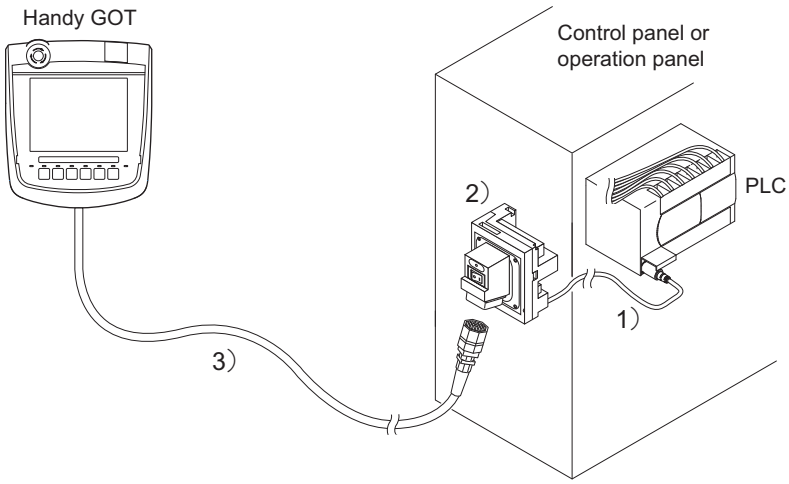

○: Usable, -: Not usable

1) PLC connection cable	2) Connector conversion box	3) External cable	4) Handy GOT	
			GT2506HS-V	GT2505HS-V
Cable selected or created according to the communication method and controller	GT16H-CNB-42S	GT16H-C30-42P	○	-
		GT16H-C60-42P	○	-
		GT16H-C100-42P	○	-
		GT14H-C30-42P	-	○
		GT14H-C60-42P	-	○
		GT14H-C100-42P	-	○
	GT16H-CNB-37S	GT16H-C30-37PE	○	-
		GT16H-C60-37PE	○	-
		GT16H-C100-37PE	○	-
		GT11H-C30-37P	-	○
		GT11H-C60-37P	-	○
		GT11H-C100-37P	-	○
	GT11H-CNB-37S	GT11H-C30-37P	-	○
		GT11H-C60-37P	-	○
		GT11H-C100-37P	-	○

Select the cable according to the communication method and controller.

For the cable selection, refer to the following.

📖GOT2000 Series Handy GOT Connection Manual For GT Works3 Version1

■Panel cutting dimensions for Connector Conversion Box

The Connector Conversion Box can be installed on the panel face directly or with mounting bracket offered as an accessory.

For details on installing procedure and panel cutting dimensions, refer to the following.

☞ Page 273 Connector Conversion Box

Installing a relay cable connector (GT2505HS-V only)

■Configuration

The following shows the configuration for using the GOT connected to the connector that is attached on a control panel or operation panel.

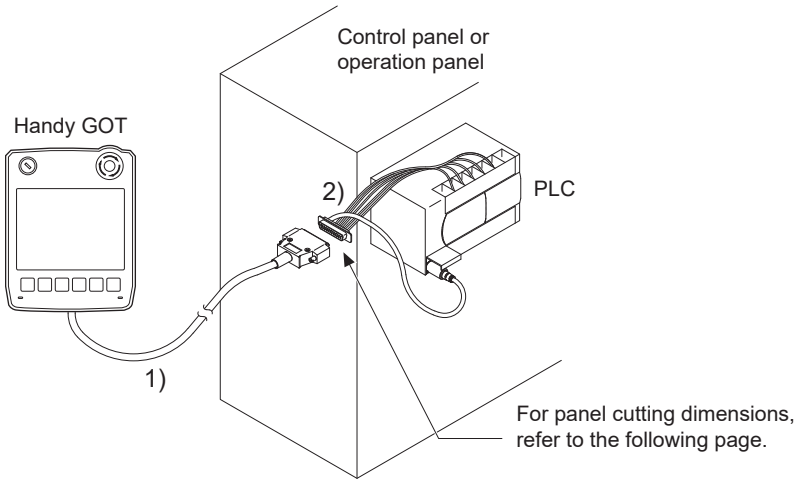

Name		Description
1)	External cable (Relay cable connection side D-Sub 37pin)	GT11H-C30-37P *1
		GT11H-C60-37P *1
		GT11H-C100-37P *1
2)	Relay cable for connecting to a PLC	GT11H-C15R4-8P *1
		GT11H-C15R4-25P *1
		GT11H-C15R2-6P *1

*1 Use C or later version.

Select the cable according to the communication method and controller

For the cable selection, refer to the following.

GOT2000 Series Handy GOT Connection Manual For GT Works3 Version1

If a relay cable other than the above is required, create the cable by yourself.

To use a cable with loose wires at one end for external connection (GT11H-C30, GT11H-C60, or GT11H-C100), refer to the following and select one according to the application.

GOT2000 Series Handy GOT Connection Manual For GT Works3 Version1

■Panel cutting dimensions when using a relay cable

To install the relay cable connector to the panel, make holes in the panel with the following dimensions.

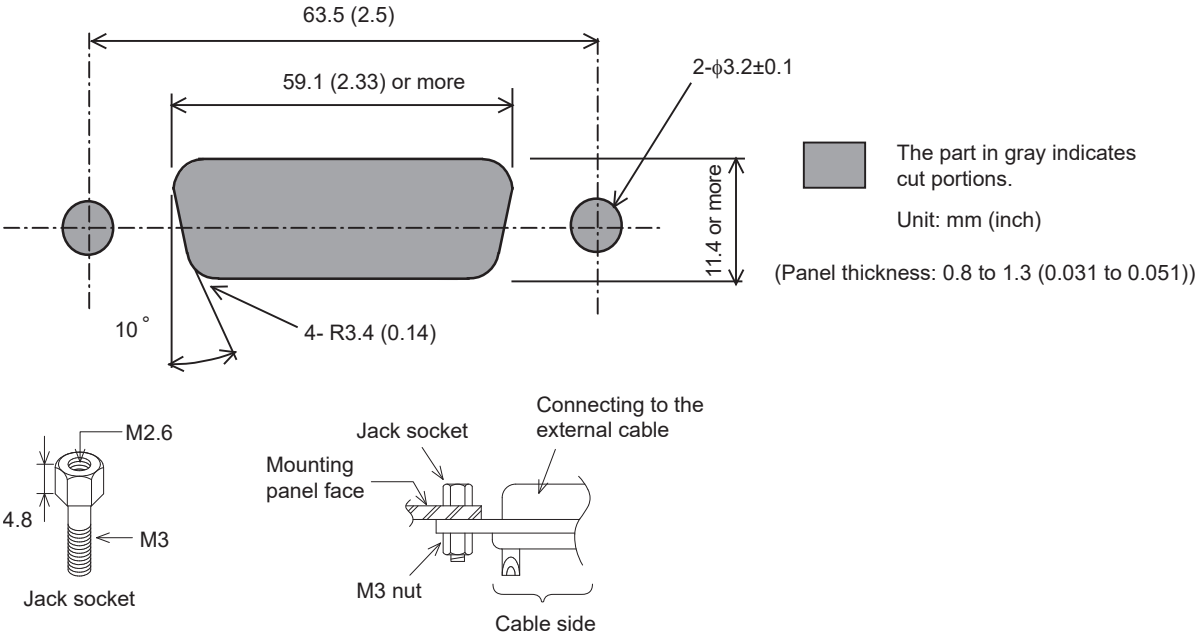

Insert a jack socket into a round hole and fix it with a M3 nut (supplied with the relay cable).

6.9 Installing and Removing the Extension Unit

For installing and removing a single extension unit, refer to the user's manual included in each extension unit.

Point

Installing the extension interface relay board

Installing any of the following communication units to the GOT does not require the extension interface relay board to be installed.

Bus connection unit (GT15-QBUS2, GT15-ABUS2)

MELSECNET/H communication unit

CC-Link IE Controller Network communication unit

CC-Link IE Field Network communication unit

CC-Link communication unit

For installing/removing a wireless LAN communication unit to/from GT27 or GT25, refer to the following.

GOT2000 Series Wireless LAN Communication Unit User's Manual

For installing/removing an SD card to/from GT21, refer to the following.

GT21-03SDCD General Description

The procedure of installing and removing the multiple extension units is as follows.

Installing multiple extension units (GT27, GT25)

This section explains the procedure for mounting an extension unit on an already mounted extension unit.

1. Make sure that the GOT power is off.
2. Remove the connector cover and the stickers from the mounted extension unit.

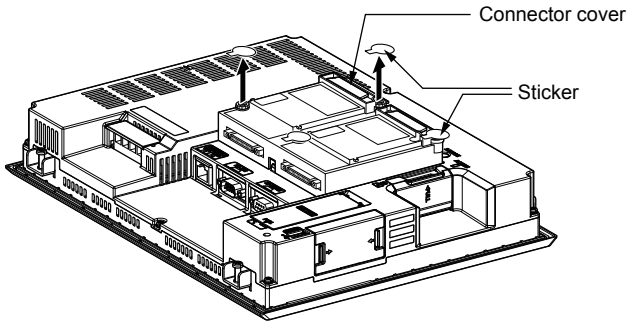

3. Mount an extension unit on the mounted extension unit.

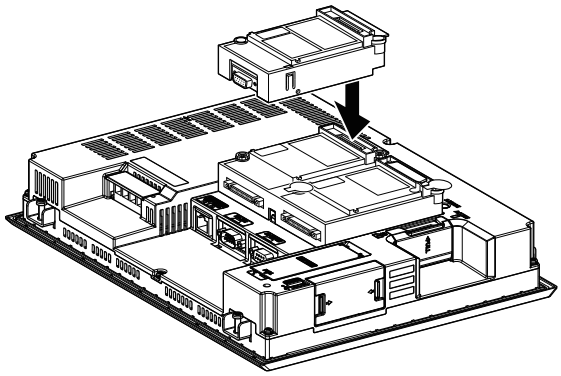

4. Tighten the screws within the specified torque range (0.36 N·m to 0.48 N·m).

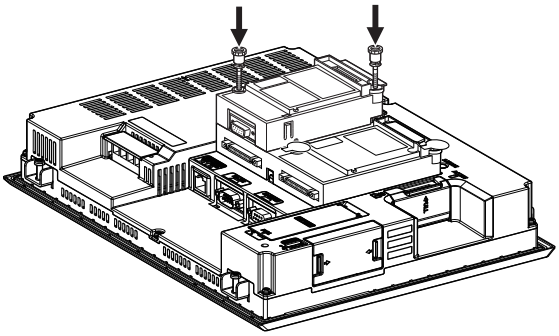

5. To mount another extension unit, repeat Step 2 to Step 3.

When you do not mount another extension unit, cover the screws with the accessory stickers to avoid static electricity.

Keep the connector cover and the stickers attached.

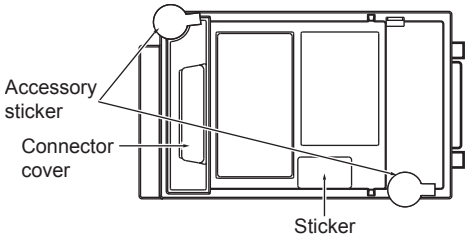

Point

• Mounting a unit on another unit

For mounting a unit on another unit, the mounting position is limited depending on a unit to be used together.

For the mounting positions of the units, refer to the following.

GOT2000 Series Connection Manual (Mitsubishi Electric Products) For GT Works3 Version1

• When the multi-channel function is used

When the multi-channel function is used, the combination of connection types is restricted.

For the combination of connection types, refer to the following.

GOT2000 Series Connection Manual (Mitsubishi Electric Products) For GT Works3 Version1

Removing the extension unit

1. Make sure that the GOT power is off.
2. Remove the accessory stickers from the mounted extension unit.
3. Loosen the screws of the unit.

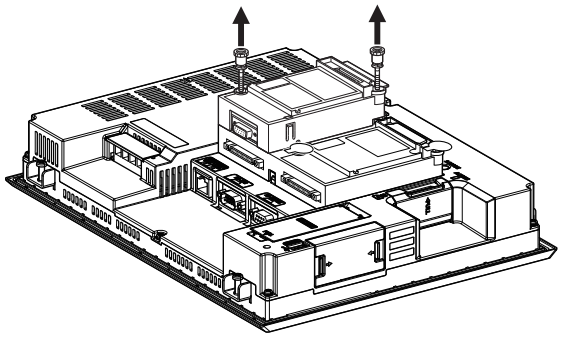

4. Remove the extension unit.

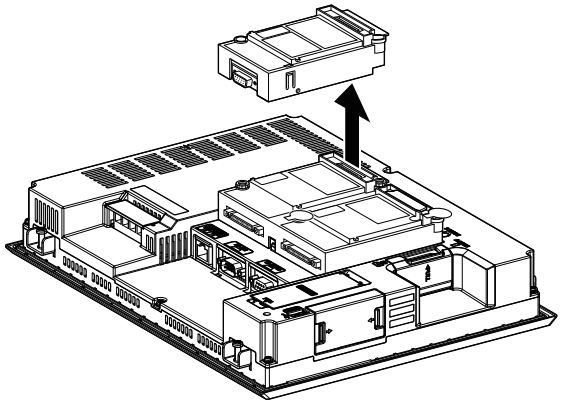

5. Install the connector covers and stickers of the extension interface.

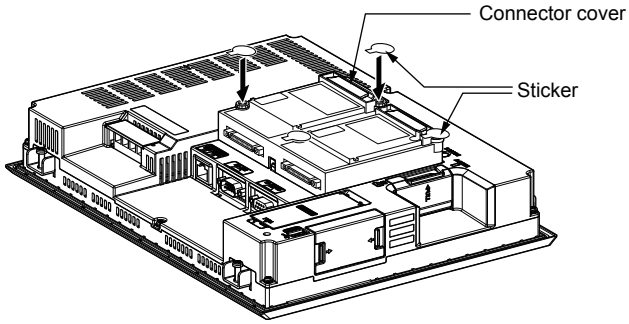

6.10 Installing the Battery

Install a battery to the GOT before the first startup.

The following shows the procedure for installing a battery.(Described with the GOT rear face facing up.)

Point

• Battery

GT27, GT25

GT27 and GT25 come with a battery in the battery holder.

Before using GT27 and GT25, connect the battery connector to the GOT connector.

For GT2505-V, GT2506HS-V, and GT2505HS-V, the battery is connected to the GOT before shipment.

GT23

Batteries for GT23 (GT11-50BAT) are sold separately.

Purchase a battery before using GT23, mount it to the GOT, and connect the GOT connector to battery connector.

GT2107-W, GT2105, GT2104-R, and GT2104-P

GT2107-W, GT2105, GT2104-R, and GT2104-P come with a battery in the battery holder.

The battery is connected to the GOT before shipment.

GT2103-P

Installing a battery is not required for GT2103-P.

(GT2103-P holds the data by the built-in flash ROM.)

• battery replacement time

GT27, GT25 (excluding GT2505 and GT2505HS-V)

To replace the battery, leave the GOT on for more than 10 minutes before replacing the battery.

Replace the battery within 5 minutes.

GT2505, GT2505HS-V, GT2107-W, GT2105, GT2104-R, and GT2104-P

Replace the battery within 30 seconds.

GT23

To replace the battery, leave the GOT on for more than 10 minutes before replacing the battery.

Replace the battery within 30 seconds.

The battery installation procedure differs depending on the GOT models.

☞ Page 232 Installing the battery to GT2715, GT2712, GT2710, GT2512, GT2510-V, or GT2510F
☞ Page 233 Installing the battery to GT2708, GT2705, or GT2508
☞ Page 235 Installing the battery to GT2512-WX, GT2510-WX, GT2507-W, or GT2507T-W
☞ Page 236 Installing the battery to GT2506HS-V
☞ Page 237 Installing the battery to GT2505HS-V
☞ Page 238 Installing the battery to GT2310 or GT2308
☞ Page 240 Installing the battery to GT2505-V, GT2107-W, GT2105, GT2104-R, GT2104-P

Installing the battery to GT2715, GT2712, GT2710, GT2512, GT2510-V, or GT2510F

The following shows the battery installation procedure, taking GT2712 as an example.

1. Make sure that the GOT power is off.

2. Install the battery to the GOT rear face.

Open the battery cover as shown below.

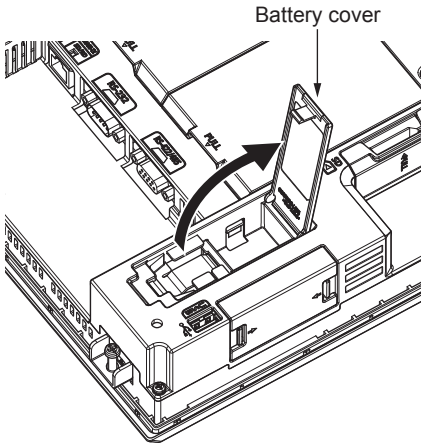

3. To replace the battery, remove the old battery, and then disconnect the connector.

For information on how to remove the battery, refer to the following.

☞ Page 242 Removing the Battery

4. The GOT-side connector depends on whether the GOT has a battery extension cable.

Without a battery extension cable

Insert the battery connector to the GOT connector.

With a battery extension cable

Insert the battery connector to the battery extension cable connector of the GOT.

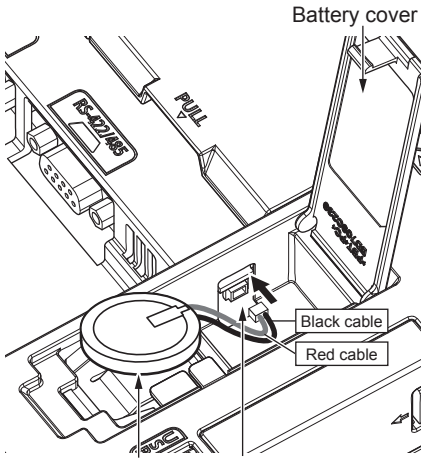

Without a battery extension cable

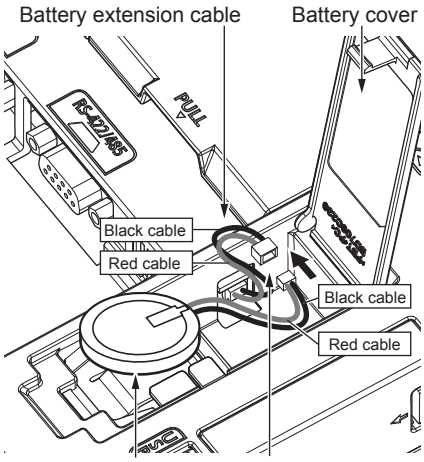

With a battery extension cable

The GT27 models with the following hardware versions have no battery extension cable.

GT2715: Version G or later (manufactured in September 2014)

GT2712: Version M or later (manufactured in September 2014)

GT2710: Version Nor later (manufactured in September 2014)

The GT25 models have no battery extension cable regardless of the hardware version.

For how to check the hardware version, refer to the following.

☞ Page 434 Confirming of Versions and Conforming Standards

5. After installing the battery to the battery holder of the GOT, close the battery cover until it clicks.

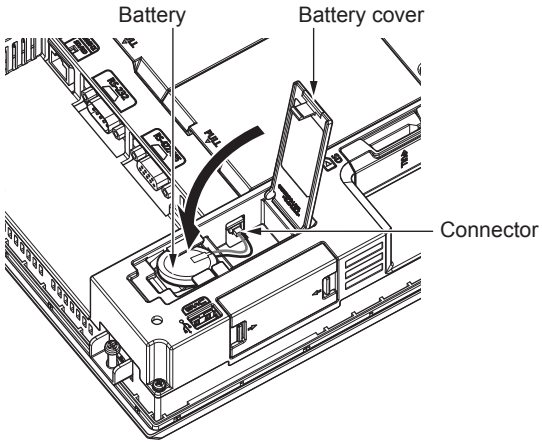

6. Turn on the GOT.

7. Check that the battery condition is normal with the utility.

For the details of the battery condition display, refer to the following.

GOT2000 Series User's Manual (Utility)

Installing the battery to GT2708, GT2705, or GT2508

The following shows the battery installation procedure, taking GT2708 as an example.

1. Make sure that the GOT power is off.

2. Install the battery inside the SD card cover on the side of the GOT.

Open the SD card cover as shown in the following figure.

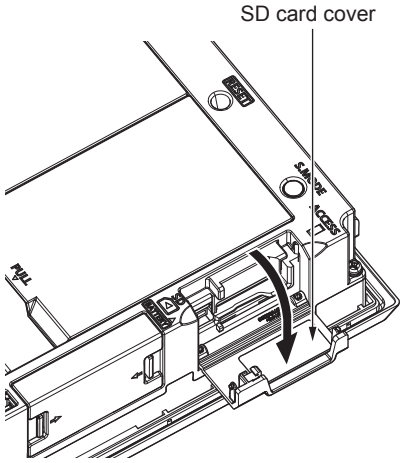

3. To replace the battery, remove the old battery, and then disconnect the connector.

For information on how to remove the battery, refer to the following.

☞ Page 242 Removing the Battery

4. Insert the battery connector to the GOT connector.

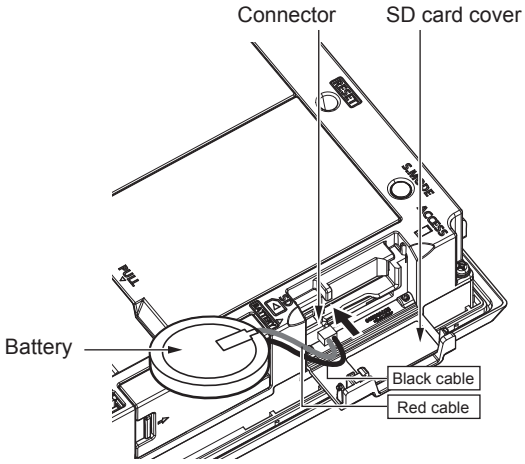

5. After installing the battery to the battery holder of the GOT, close the SD card cover until it clicks.

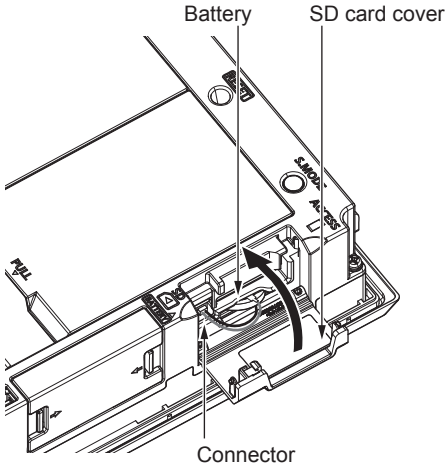

6. Turn on the GOT.

7. Check that the battery condition is normal with the utility.

For the details of the battery condition display, refer to the following.

GOT2000 Series User's Manual (Utility)

Installing the battery to GT2512-WX, GT2510-WX, GT2507-W, or GT2507T-W

The following shows the battery installation procedure, taking GT2510-WX as an example.

1. Make sure that the GOT power is off.

2. Install the battery to the GOT rear face.

Open the battery cover as shown below.

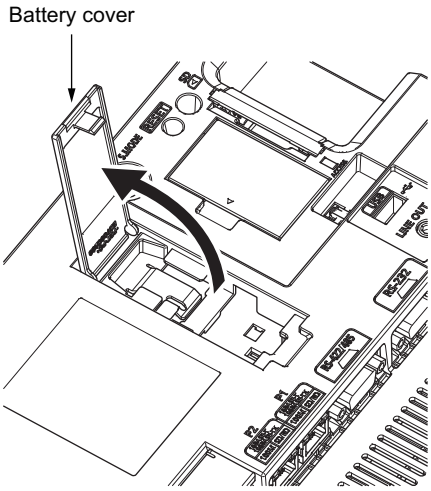

3. To replace the battery, remove the old battery, and then disconnect the connector.

For information on how to remove the battery, refer to the following.

☞ Page 242 Removing the Battery

4. Insert the battery connector to the GOT connector.

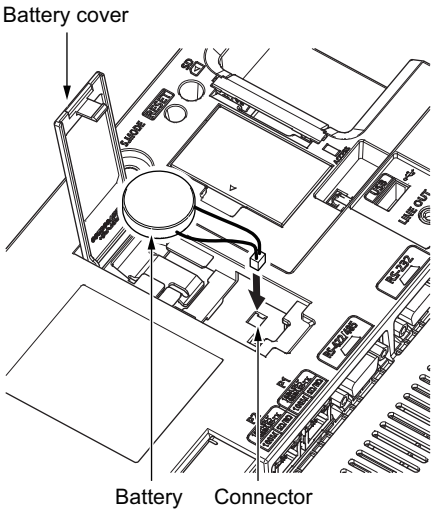

5. After installing the battery to the battery holder of the GOT, close the battery cover until it clicks.

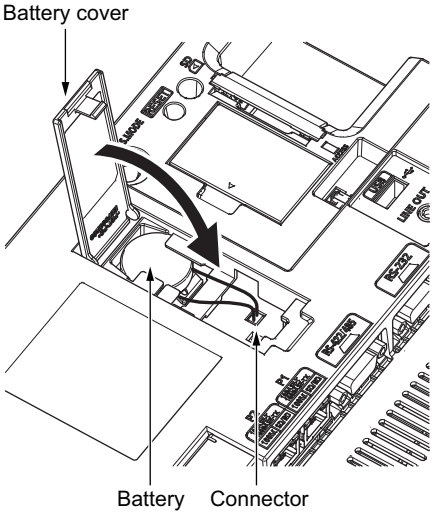

6. Turn on the GOT.

7. Check that the battery condition is normal with the utility.

For the details of the battery condition display, refer to the following.

GOT2000 Series User's Manual (Utility)

Installing the battery to GT2506HS-V

The following shows the battery installation procedure.

1. Make sure that the GOT power is off.

2. Loosen the environmental protection back cover screws at two points on GOT rear face to remove the cover.

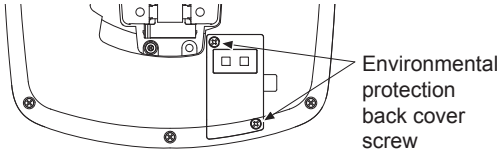

3. Insert the battery connector to the connector for battery connection on the GOT, and put the battery into place.

Insert the red lead as to pass it through the notch on the circuit board.

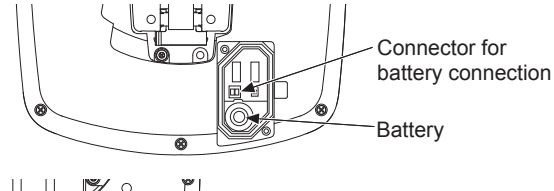

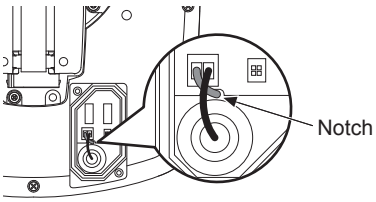

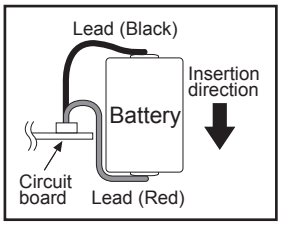

4. Attach the environmental protection back cover and tighten the screws within the specified torque range (0.36 N•m to 0.48 N•m).

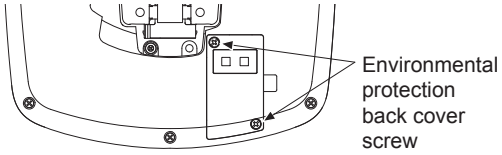

5. Turn on the GOT.

6. Check that the battery condition is normal with the utility.

For the details of the battery condition display, refer to the following.

GOT2000 Series User's Manual (Utility)

Installing the battery to GT2505HS-V

The following shows the battery installation procedure.

1. Make sure that the GOT power is off.

2. Loosen the environmental protection back cover screws at four points on GOT rear face to remove the cover.

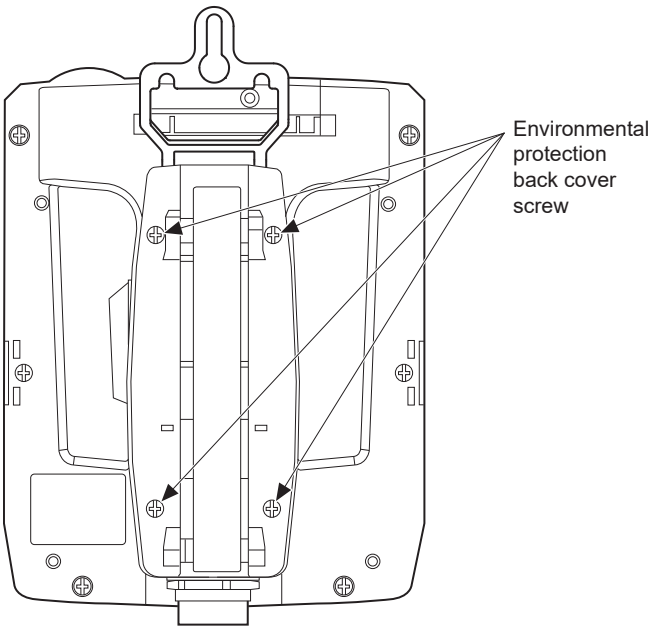

3. Insert the battery connector to the connector for battery connection on the GOT, and put the battery into place.

4. Install the battery to the GOT.

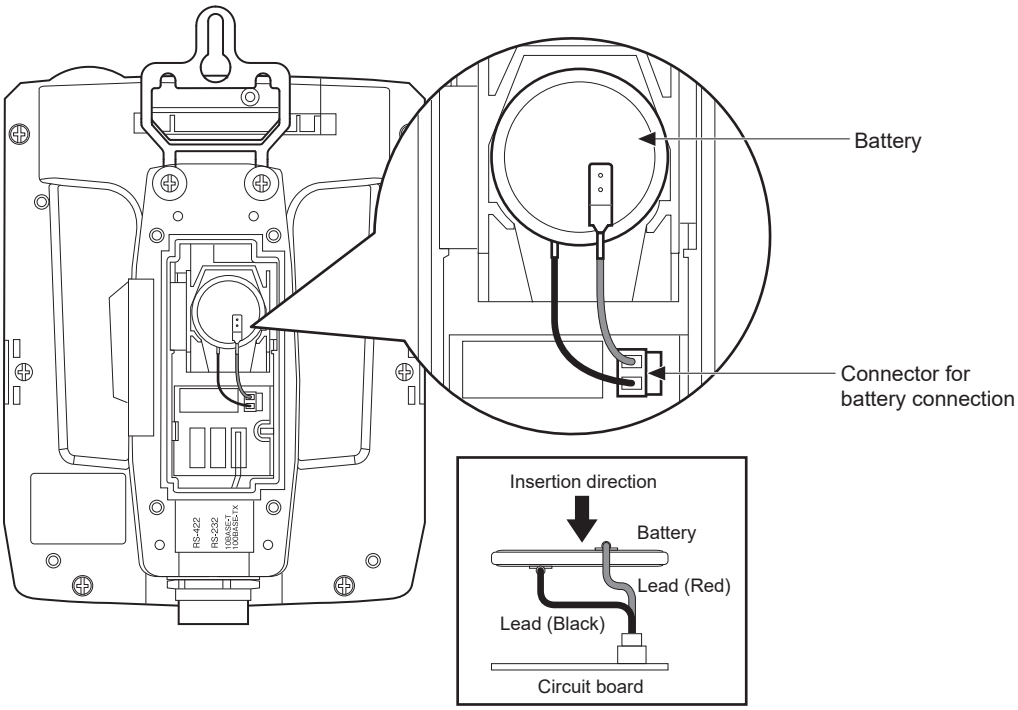

5. Attach the environmental protection back cover and tighten the screws within the specified torque range (0.36 N•m to 0.48 N•m).

6. Turn on the GOT.

7. Check that the battery condition is normal with the utility.

For the details of the battery condition display, refer to the following.

GOT2000 Series User's Manual (Utility)

Installing the battery to GT2310 or GT2308

The following shows the battery installation procedure, taking GT2310 as an example.

1. Make sure that the GOT power is off.

2. Install the battery to the GOT rear face.

Open the battery cover as shown below.

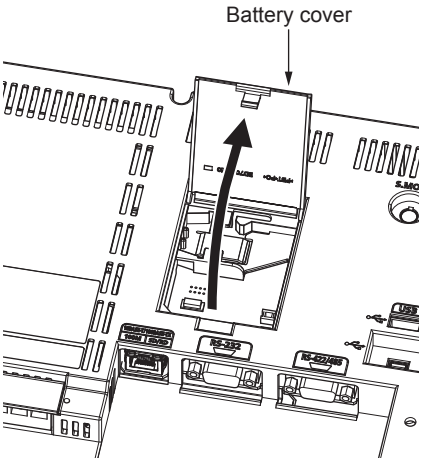

3. To replace the battery, remove the old battery, and then disconnect the connector.

For information on how to remove the battery, refer to the following.

Page 242 Removing the Battery

4. Insert the battery connector to the GOT connector.

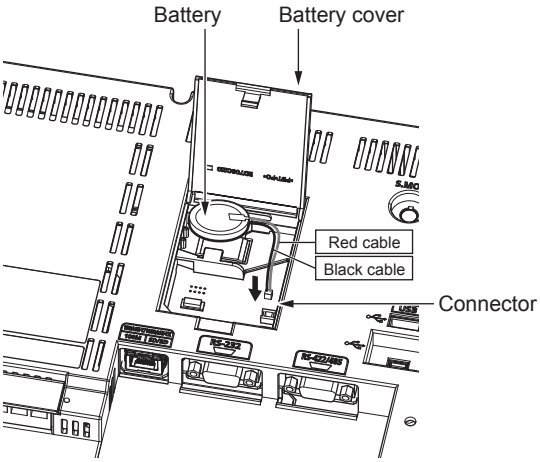

5. After installing the battery to the battery holder of the GOT, close the battery cover until it clicks.

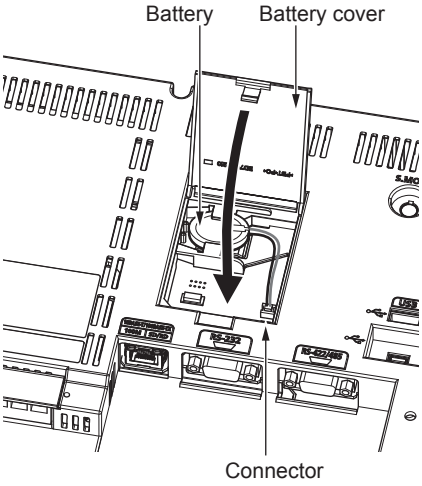

6. Turn on the GOT.

7. Check that the battery condition is normal with the utility.

For the details of the battery condition display, refer to the following.

GOT2000 Series User's Manual (Utility)

Installing the battery to GT2505-V, GT2107-W, GT2105, GT2104-R, GT2104-P

The following shows the battery installation procedure, taking GT2505-V, GT2107-W, GT2105, GT2104-R, GT2104-P as an example.

1. Make sure that the GOT power is off.

2. Open the battery cover as shown below.

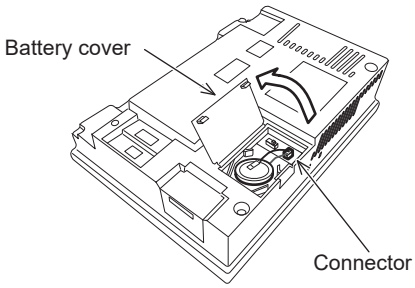

For GT2107-W

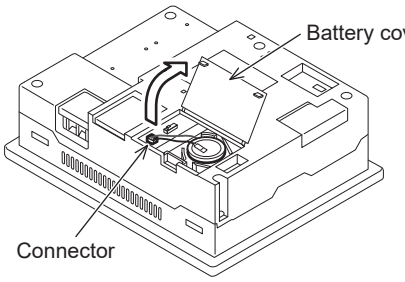

For GT2505-V and GT2105

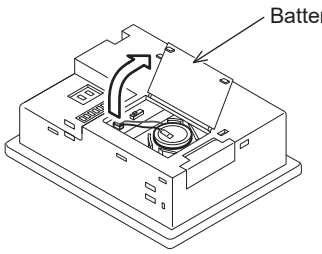

For GT2104-R

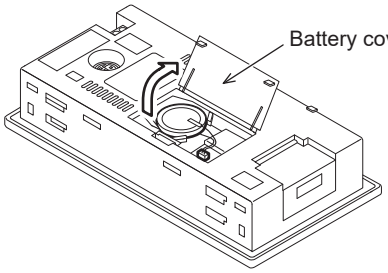

For GT2104-P

3. To replace the battery, remove the old battery, and then disconnect the connector.

For information on how to remove the battery, refer to the following.

☞ Page 242 Removing the Battery

4. Insert the battery connector to the GOT connector.

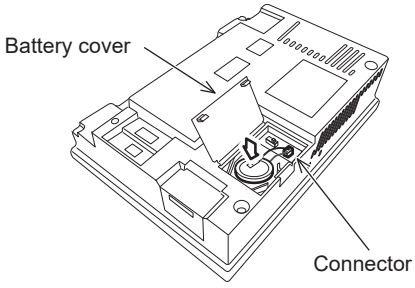

For GT2107-W

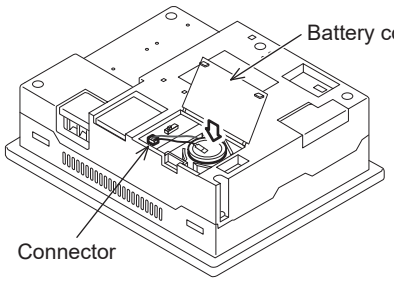

For GT2505-V and GT2105

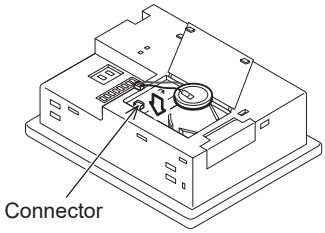

For GT2104-R

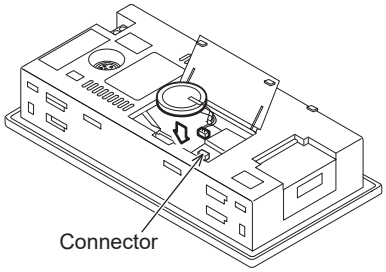

For GT2104-P

5. After installing the battery to the battery holder of the GOT, close the battery cover until it clicks.

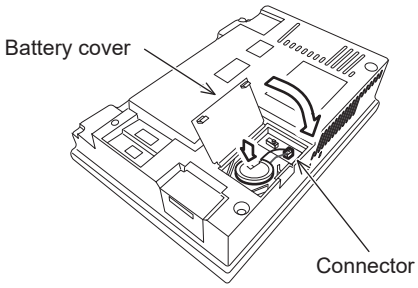

For GT2107-W

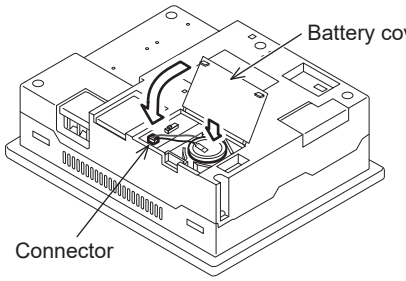

For GT2505-V and GT2105

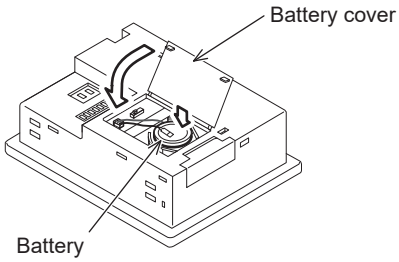

For GT2104-R

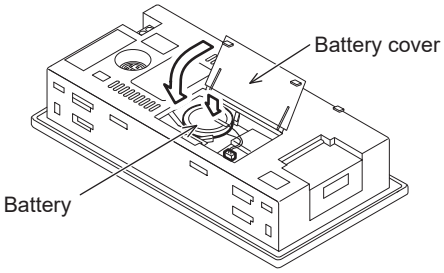

For GT2104-P

6. Turn on the GOT.

7. Check that the battery condition is normal with the utility.

For the details of the battery condition display, refer to the following.

GOT2000 Series User's Manual (Utility)

6.11 Removing the Battery

The battery removal procedure differs depending on the GOT models.

☞ Page 242 Removing the battery from GT2715, GT2712, GT2710, GT2512, GT2510-V, or GT2510F
☞ Page 244 Removing the battery from GT2708, GT2705, GT2710 or GT2508
☞ Page 245 Removing the battery from GT2512-WX, GT2510-WX, GT2507-W, or GT2507T-W
☞ Page 246 Removing the battery from GT2506HS-V
☞ Page 247 Removing the battery from GT2505HS-V
☞ Page 248 Removing the battery from GT2310 or GT2308
☞ Page 249 Removing the battery from GT2505-V, GT2107-W, GT2105, GT2104-R, GT2104-P

Removing the battery from GT2715, GT2712, GT2710, GT2512, GT2510-V, or GT2510F

The following shows the battery removal procedure, taking GT2712 as an example.

1. Make sure that the GOT power is off.

2. The battery is stored in the GOT rear face.

Open the battery cover as shown below.

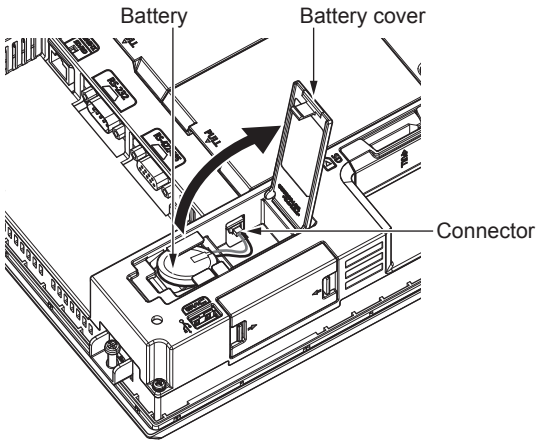

3. After removing the battery from the battery holder of the GOT, unplug the connector.

The GOT-side connector depends on whether the GOT has a battery extension cable.

Without a battery extension cable

Unplug the battery connector from the GOT connector.

With a battery extension cable

Unplug the battery connector from the battery extension cable connector of the GOT.

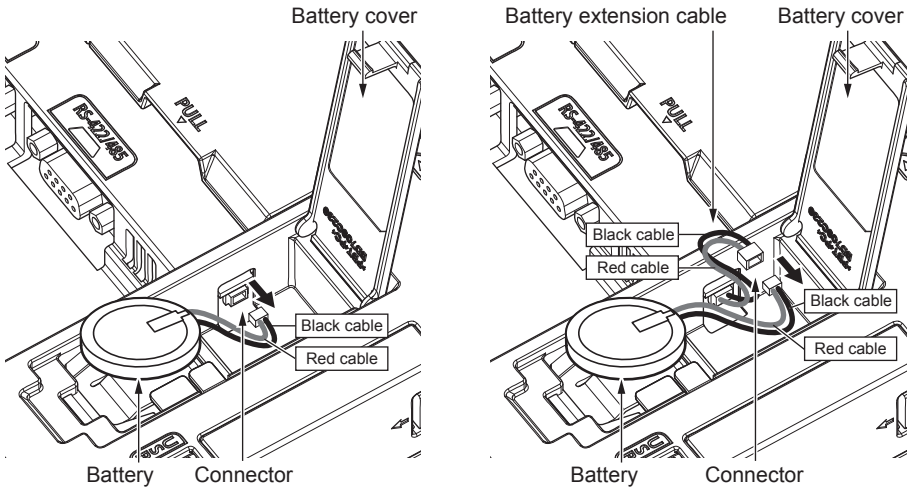

Without a battery extension cable

With a battery extension cable

The GT27 models with the following hardware versions have no battery extension cable.

GT2715: Version G or later (manufactured in September 2014)

GT2712: Version M or later (manufactured in September 2014)

GT2710: Version Nor later (manufactured in September 2014)

The GT25 models have no battery extension cable regardless of the hardware version.

For how to check the hardware version, refer to the following.

☞ Page 434 Confirming of Versions and Conforming Standards

4. Push and close the battery cover until it clicks.

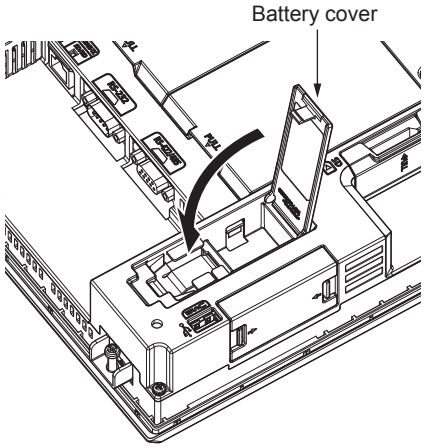

Removing the battery from GT2708, GT2705, GT2710 or GT2508

The following shows the battery removal procedure, taking GT2708 as an example.

1. Make sure that the GOT power is off.

2. The battery is stored inside the SD card cover on the side of the GOT.

Open the SD card cover as shown in the following figure.

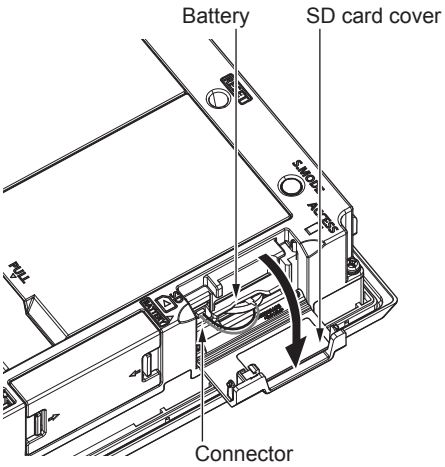

3. After removing the battery from the battery holder of the GOT, unplug the battery connector from the GOT connector.

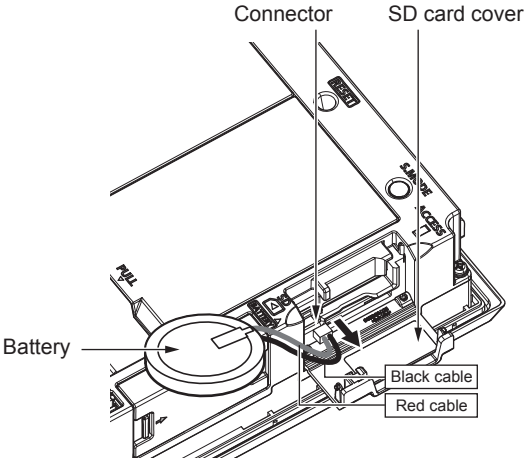

4. Close the SD card cover until it clicks.

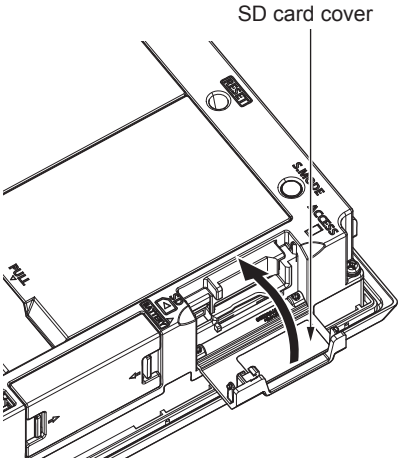

Removing the battery from GT2512-WX, GT2510-WX, GT2507-W, or GT2507T-W

The following shows the battery removal procedure, taking GT2510-WX as an example.

1. Make sure that the GOT power is off.

2. The battery is stored in the GOT rear face.

Open the battery cover as shown below.

Battery cover

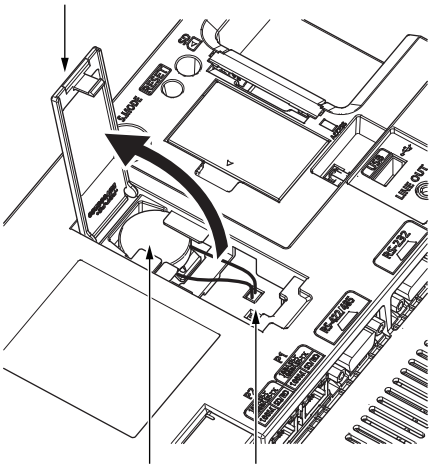

3. After removing the battery from the battery holder of the GOT, unplug the connector.

Battery cover

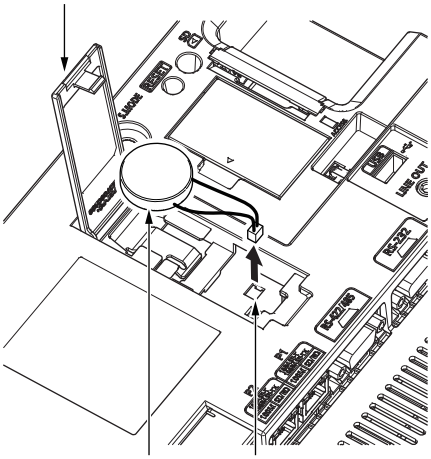

4. Push and close the battery cover until it clicks.

Battery cover

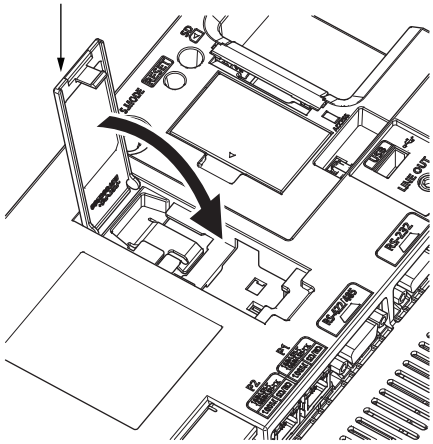

Removing the battery from GT2506HS-V

The following shows the battery removal procedure.

1. Make sure that the GOT power is off.
2. Loosen the environmental protection back cover screws at two points on GOT rear face to remove the cover.

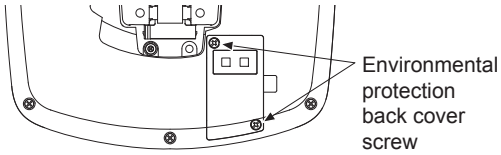

3. Remove the battery from the GOT, and unplug the battery connector.

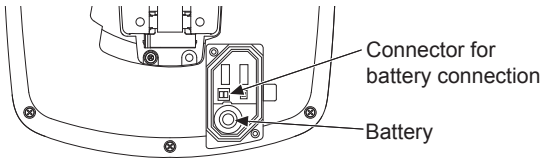

4. Attach the environmental protection back cover and tighten the screws within the specified torque range (0.36 N•m to 0.48 N•m).

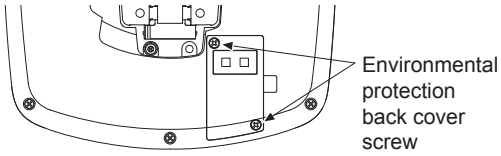

Removing the battery from GT2505HS-V

The following shows the battery removal procedure.

1. Make sure that the GOT power is off.
2. Loosen the environmental protection back cover screws at four points on GOT rear face to remove the cover.

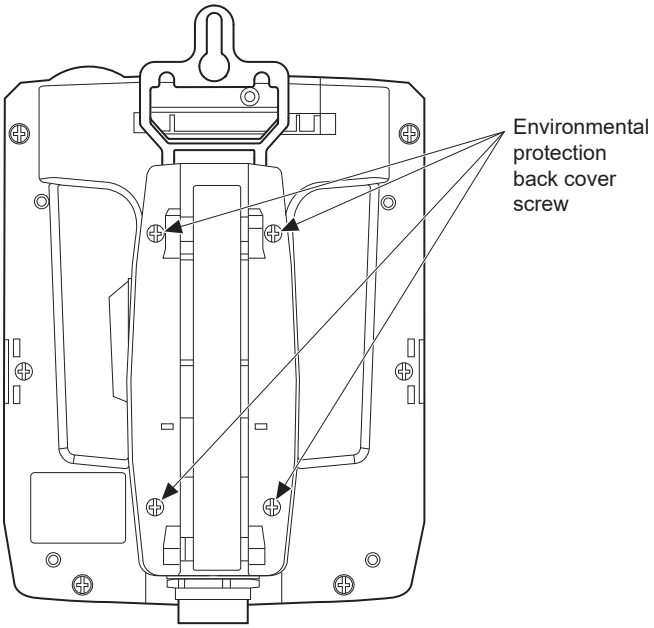

3. Remove the battery from the GOT, and unplug the battery connector.

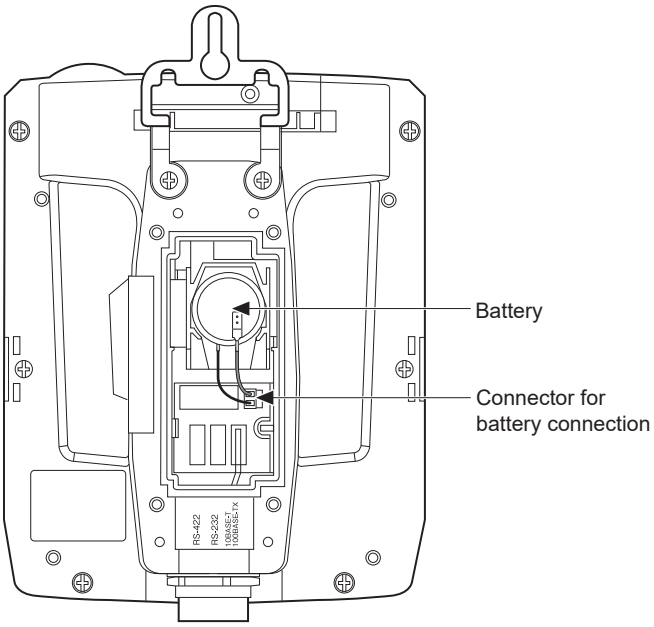

4. Attach the environmental protection back cover and tighten the screws within the specified torque range (0.36 N•m to 0.48 N•m).

Removing the battery from GT2310 or GT2308

The following shows the battery removal procedure, taking GT2310 as an example.

1. Make sure that the GOT power is off.

2. The battery is stored in the GOT rear face.

Open the battery cover as shown below.

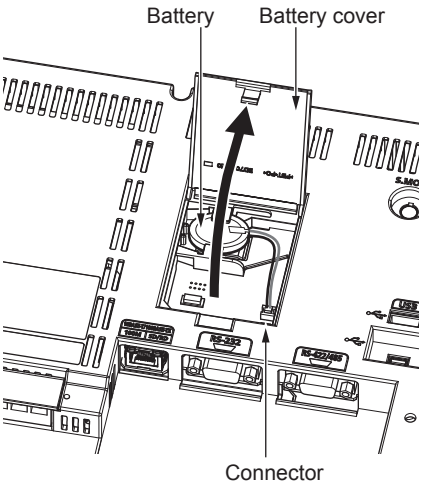

3. After removing the battery from the battery holder of the GOT, unplug the battery connector from the GOT connector.

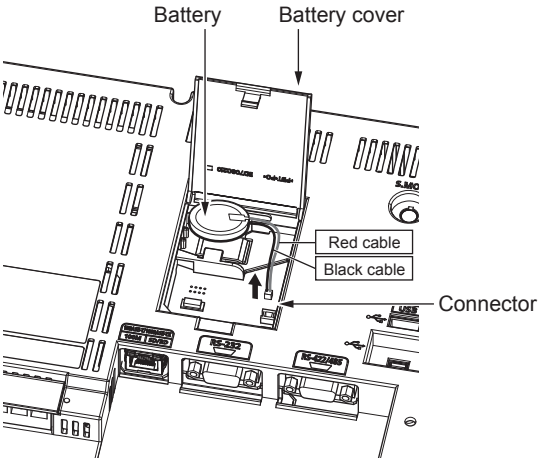

4. Push and close the battery cover until it clicks.

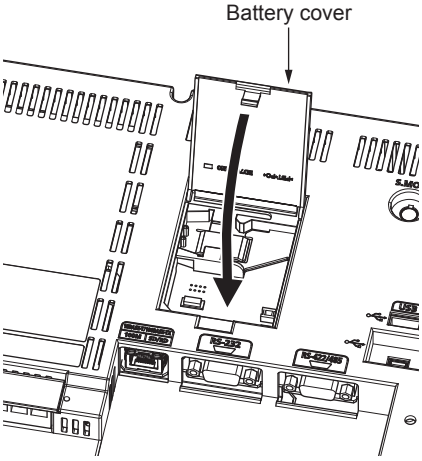

Removing the battery from GT2505-V, GT2107-W, GT2105, GT2104-R, GT2104-P

The following shows the battery removal procedure, taking GT2505-V, GT2107-W, GT2105, GT2104-R, GT2104-P as an example.

1. Make sure that the GOT power is off.
2. Open the battery cover as shown below.

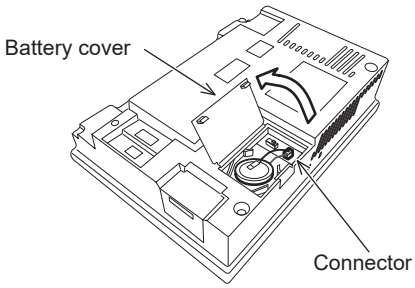

For GT2107-W

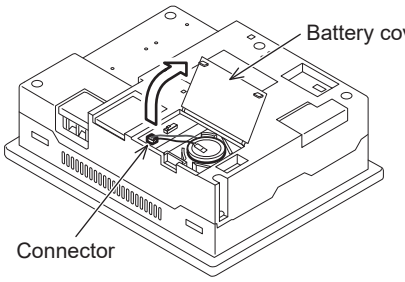

For GT2505-V and GT2105

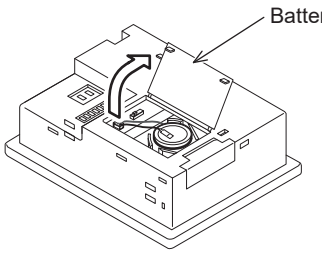

For GT2104-R

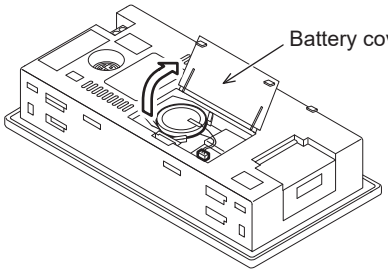

For GT2104-P

3. After removing the battery from the battery holder of the GOT, unplug the connector.

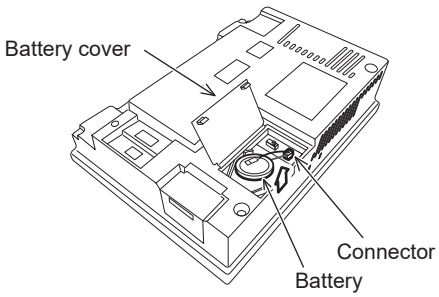

For GT2107-W

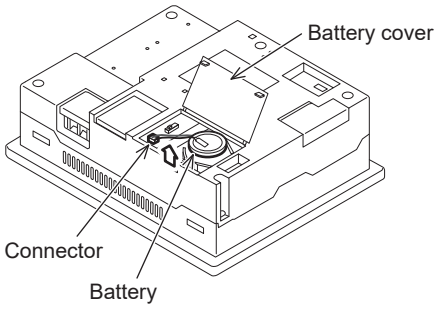

For GT2505-V and GT2105

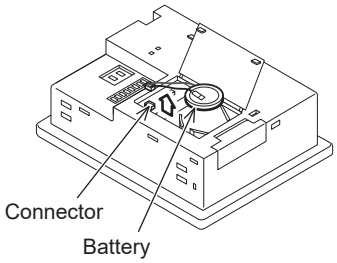

For GT2104-R

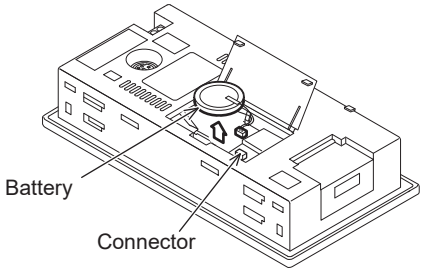

For GT2104-P

4. Push and close the battery cover until it clicks.

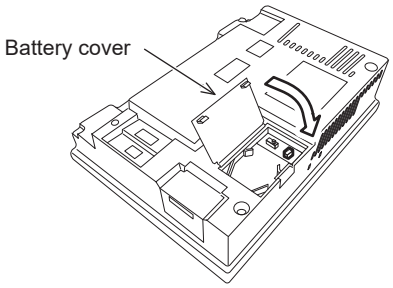

For GT2107-W

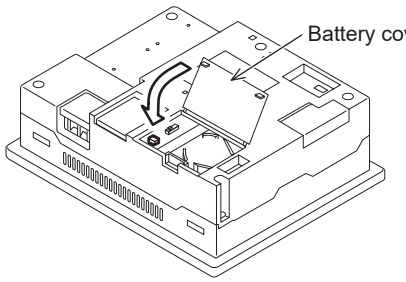

For GT2505-V and GT2105

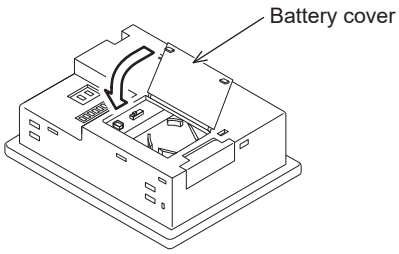

For GT2104-R

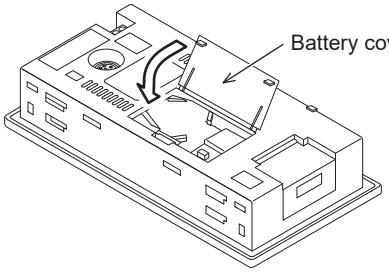

For GT2104-P

6.12 Installing the SD Card

⚠CAUTION

- Turning off the GOT while it accesses the SD card results in damage to the SD card and files.
- When using the GOT with an SD card inserted, check the following items.
  - GT27, GT25, GT23(Except for GT2505-V, GT25HS-V)
    After inserting an SD card into the GOT, make sure to close the SD card cover.
    Otherwise, data cannot be read or written.
  - GT2505-V, GT25HS-V
    After inserting an SD card into the GOT, make sure to turn on the SD card access switch.
    Otherwise, data cannot be read or written.
  - GT21
    After inserting an SD card into the SD card unit, make sure to enable the SD card access in the GOT utility.
    Otherwise, data cannot be read or written.

The SD card installation procedure differs depending on the GOT model.)

☞ Page 252 GT27, GT25, GT23

☞ Page 256 GT25HS-V

☞ Page 257 GT21

GT27, GT25 (except GT25-W and GT2505-V), GT23

1. Open the SD card cover as shown below.

(The rear face of the GOT is shown on the top.)

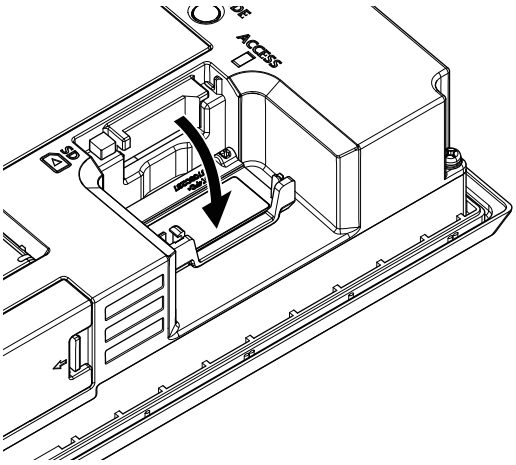

2. Make sure that the SD card access LED is off when the SD card cover is open 90 degrees or more, and then insert an SD card with its front side up.

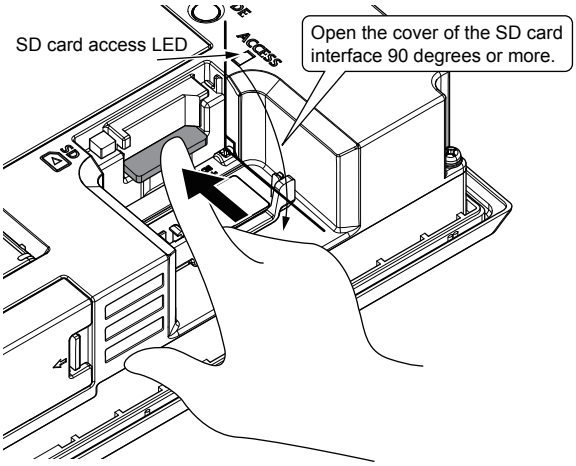

3. Push and close the SD card cover until it clicks.

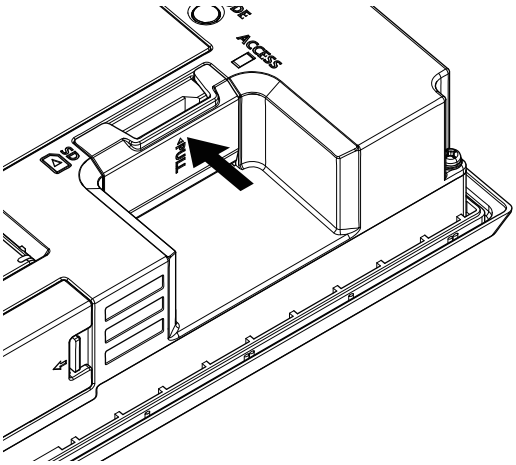

4. When the SD card cover is closed, the access to the SD card is allowed.

GT25-W

1. Open the SD card cover as shown below.

(The rear face of the GOT is shown on the top.)

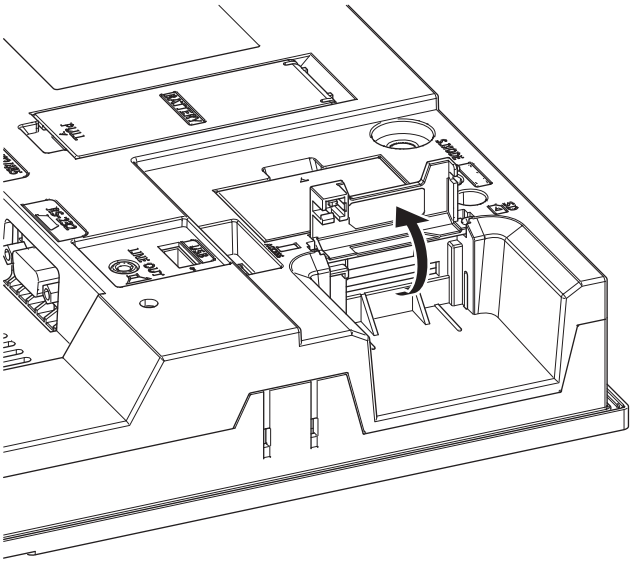

2. Open the SD card cover completely, and check that the SD card access LED is off.

Then, hold an SD card with its front side facing up, and insert the card into the SD card interface.

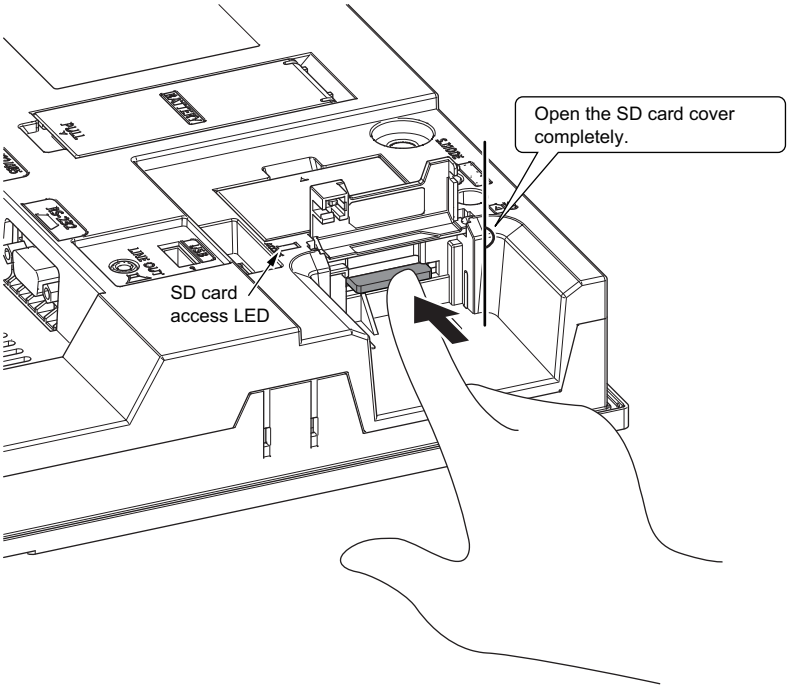

3. Push and close the SD card cover until it clicks.

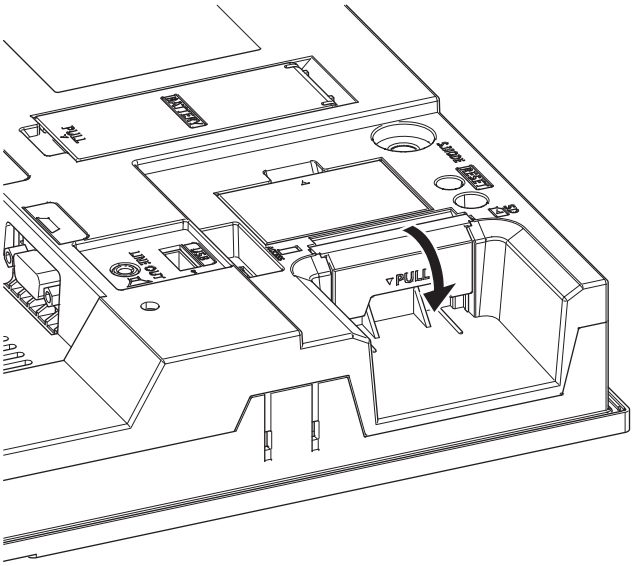

4. When the SD card cover is closed, the access to the SD card is allowed.

GT2505-V

1. Turn off the SD card access switch, and check that the SD card access LED turns off.

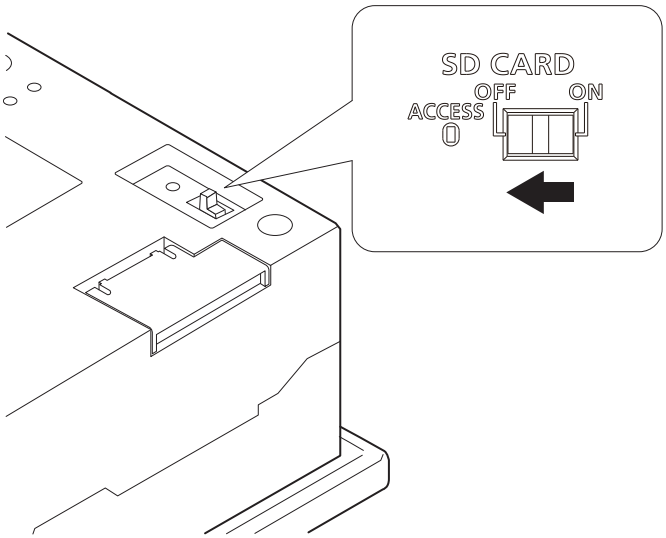

2. Open the SD card cover.

Insert an SD card into the SD card interface with its front side (label side) facing toward the GOT rear face.

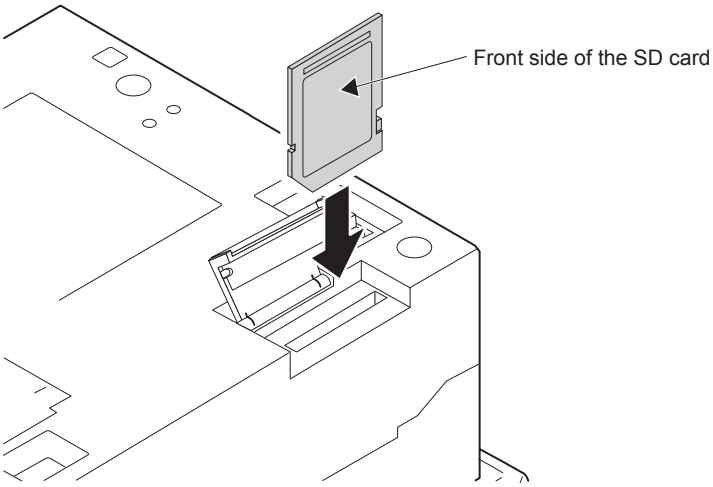

3. Close the SD card cover, and turn on the SD card access switch.

The SD card becomes accessible afterward.

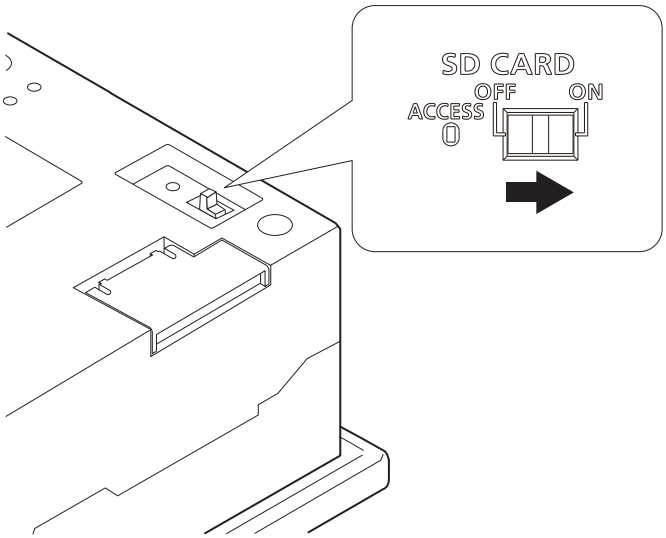

GT25HS-V

The following shows the installation procedure, taking GT2506HS-V as an example.

1. Open the interface environmental protection cover in the arrow-pointing direction.

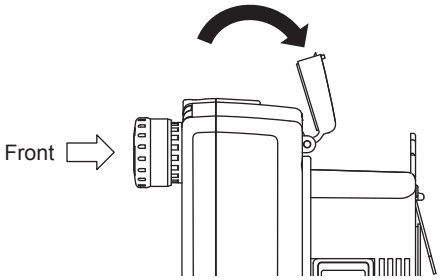

2. Turn off the SD card access switch, and check that the SD card access LED turns off.

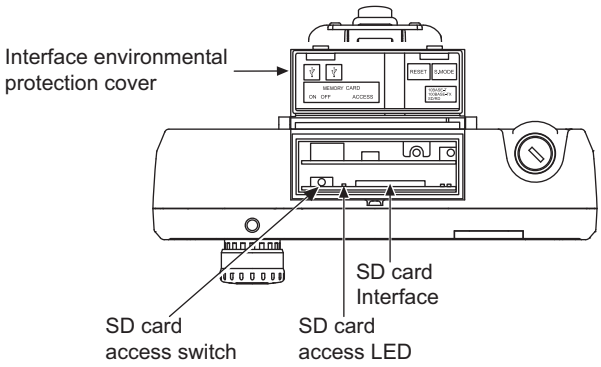

3. Insert an SD card into the SD card interface with its front side (label side) facing toward the GOT rear face.

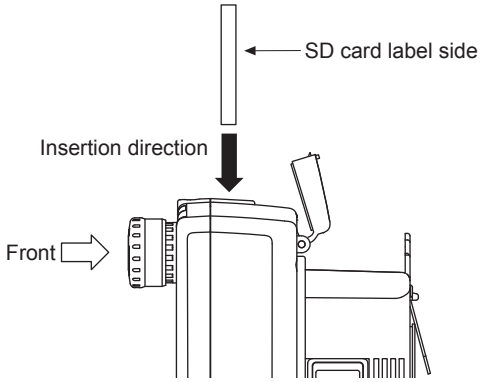

4. Turn on the SD card access switch.

The SD card becomes accessible afterward.

5. Close the interface environmental protection cover.

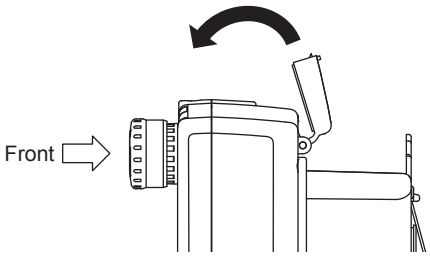

GT21

GT21

Before inserting or removing an SD card, turn off the GOT or select [Access inhibit] in the SD card access setting of the GOT.

1. Touch [Utility main menu] → [Data control] → [SD card access] → [Permissions], and select [Access inhibit].

GOT2000 Series User's Manual (Utility)

Check that the SD card access LED turns off.

When the LED is off, the SD card can be inserted or removed at the GOT power-on.



2. Open the SD card cover, and insert the SD card with its front side (name plate side) facing outward. Close the SD card cover.

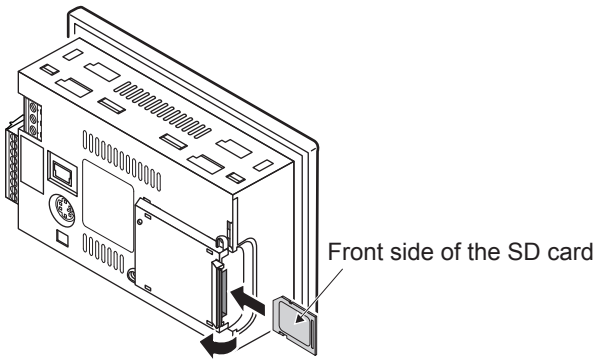

3. Touch [SD card access] → [Access inhibit], and select [Permissions].

Check that the SD card access LED turns on.

6.13 Removing the SD Card

⚠WARNING

- If the SD card mounted on drive A of the GOT is removed while the GOT is accessed, processing for the GOT might be interrupted about for 20 seconds.
  The GOT cannot be operated during this period.
  The functions that run in the background including a screen updating, alarm, logging, scripts, and others are also interrupted.
  This stop affects the system operation, causing an accident.
  Remove the SD card after checking the following items.
  • GT27, GT25, GT23 (Except for GT2505-V, GT25HS-V)
  Check that the SD card access LED is off before removing the SD card.
  • GT2505-V, GT25HS-V
  Make sure to turn off the SD card access switch before removing the SD card.
  Not doing so may damage the SD card and files.
  • GT21
  Disable the SD card access in the GOT utility, and then check that the SD card access LED is off before removing the SD card.

⚠CAUTION

- If the data storage mounted on the GOT is removed while the GOT is accessed, the data storage and files are damaged.
  To remove the data storage from the GOT, check that the access to the data storage in SD card access LED, the system signal, and others is not performed.
- When using the GOT with an SD card inserted, check the following items.
  • GT27, GT25, GT23
  When inserting a SD card into the GOT, make sure to close the SD card cover.
  Failure to do so causes the data not to be read or written.
  • GT21
  When inserting an SD card into the SD card unit, make sure to enable the SD card access in the GOT utility in advance.
- When removing the SD card from the GOT, make sure to support the SD card by hand as it may pop out.
  Failure to do so may cause the SD card to drop from the GOT, resulting in a failure or break.
- Before removing the data storage from the GOT, follow the procedure for removal on the utility screen of the GOT. After the successful completion dialog is displayed, remove the data storage by hand carefully.
  Failure to do so may cause the data storage to drop from the GOT, resulting in a failure or break.

The SD card removal procedure differs depending on the GOT model.

☞ Page 259 GT27, GT25, GT23
☞ Page 263 GT25HS-V
☞ Page 264 GT21

GT27, GT25 (except GT25-W and GT2505-V), GT23

1. Open the SD card cover as shown below.

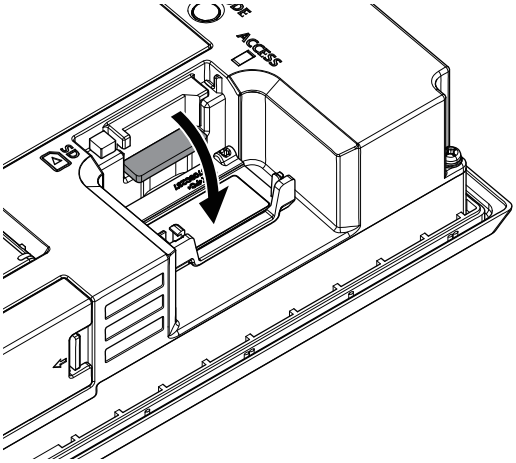

2. Make sure that the SD card access LED is off when the SD card cover is open 90 degrees or more, and then push the SD card in to eject it.

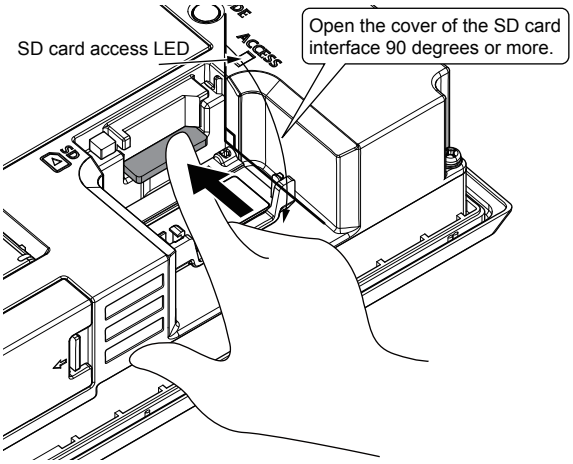

3. Close the cover of the SD card interface.

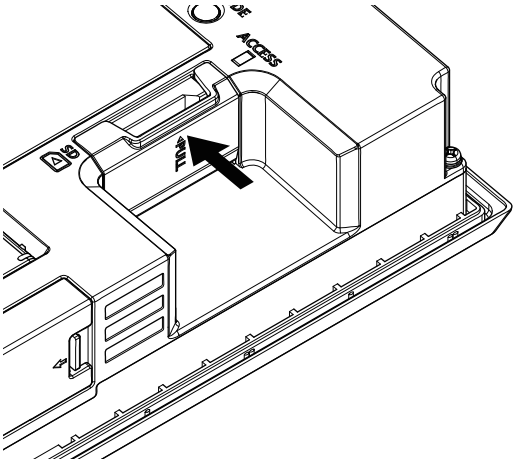

GT25-W

1. Open the SD card cover as shown below.

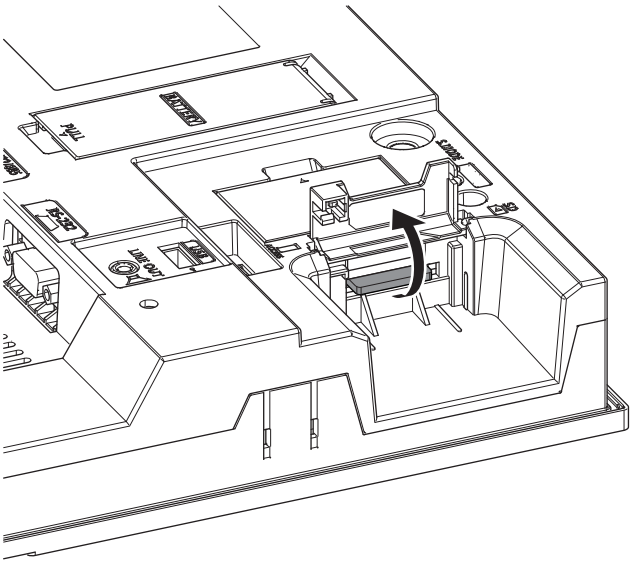

2. Open the SD card cover completely, and check that the SD card access LED is off.
Then, push the SD card in to eject it.

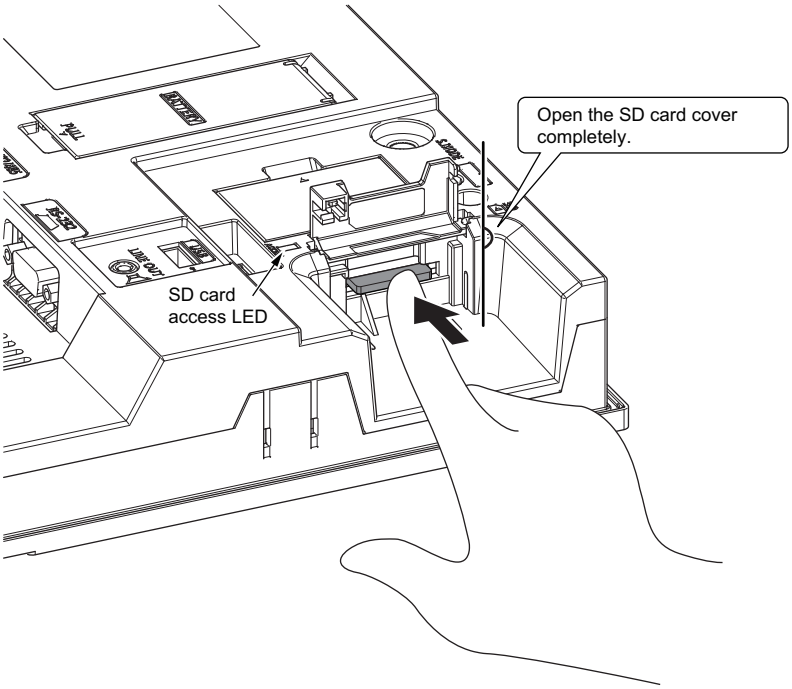

3. Close the cover of the SD card interface.

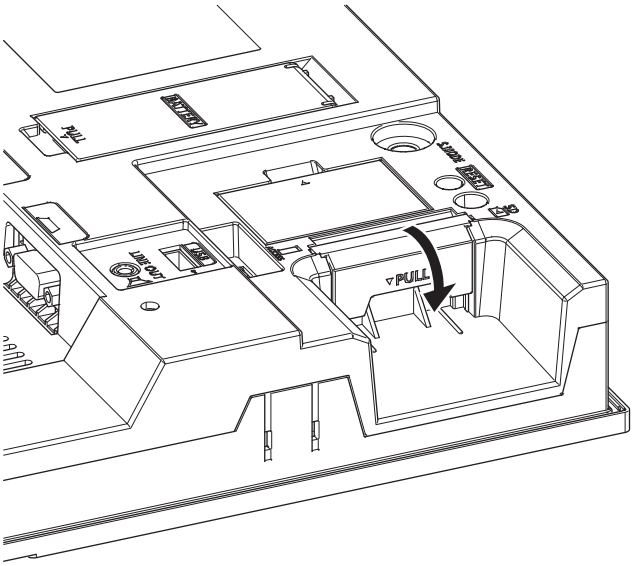

GT2505-V

1. Turn off the SD card access switch, and check that the SD card access LED turns off.

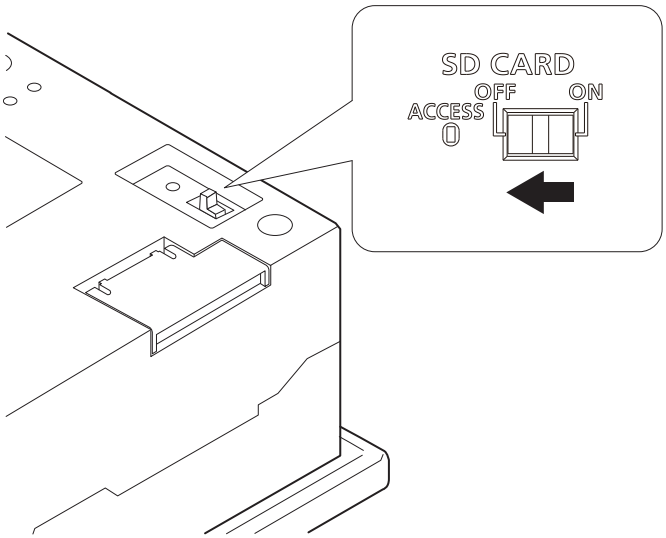

2. Open the SD card cover.

Eject the SD card.

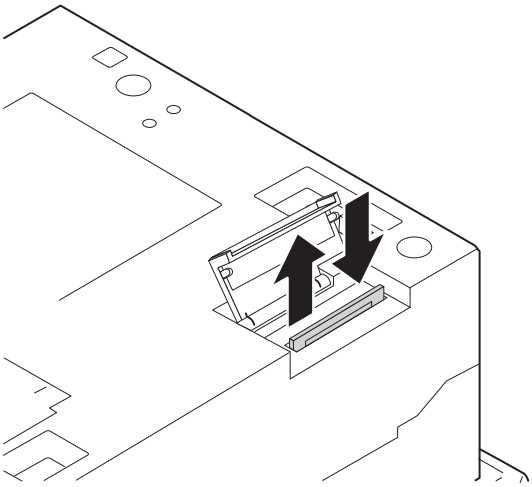

3. Close the SD card cover.

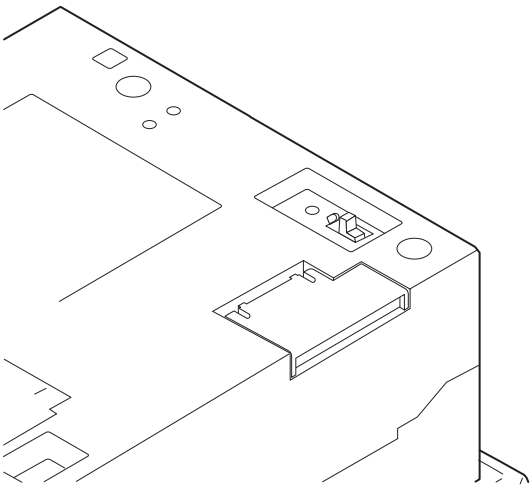

GT25HS-V

The following shows the installation procedure, taking GT2506HS-V as an example.

1. Open the interface environmental protection cover in the arrow-pointing direction.

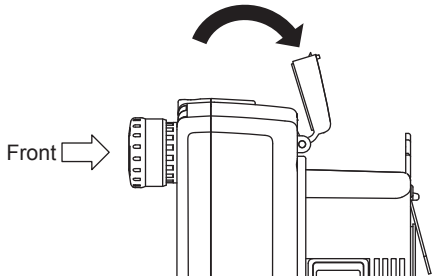

2. Set the SD card access switch of the GOT to OFF, and check that the SD card access LED turns off.

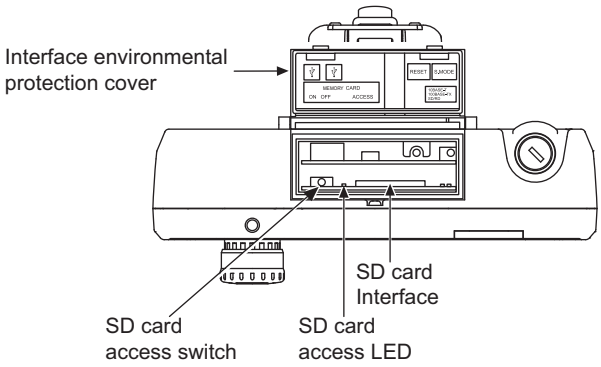

3. Eject and remove the SD card.

4. Close the interface environmental protection cover.

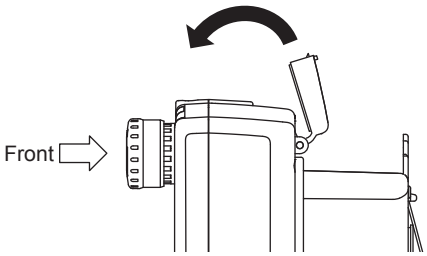

GT21

Before inserting or removing an SD card, turn off the GOT or select [Access inhibit] in the SD card access setting of theGOT.

1. Touch [Utility main menu] → [Data control] → [SD card access] → [Permissions], and select [Access inhibit].

GOT2000 Series User's Manual (Utility)

Check that the SD card access LED turns off.

When the LED is off, the SD card can be inserted or removed at the GOT power-on.



2. Open the SD card cover, and remove the SD card.

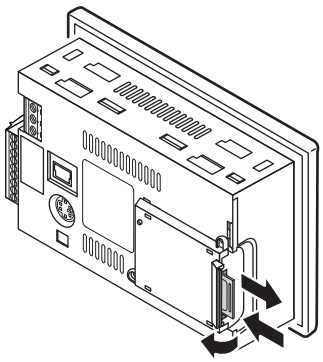

Point

• Cautions for removing the SD card

While the SD card access LED is on, do not remove the SD card or power off the GOT. Doing so results in damage to the SD card and files.

When removing the SD card from the GOT, make sure to hold the SD card as it may pop out.

• Enabling or disabling the SD card access when the SD card cover is removed (GT27 and GT25 only)

The SD card access is enabled or disabled by closing or opening the SD card cover. If the SD card cover is faulty and remains opened, the SD Card Access Switch Status Control (GS1820.b0) turns on.

To enable or disable the SD card access, turn on or off GS1820.b1.

6.14 Installing and Removing the USB Devices

The following shows the procedure for installing and removing a USB device.

Point

Connecting the USB hub devices to the USB interface (Host)
When connecting the devices to the USB interface (Host) using USB hub with the GOT power on, drive assignment of connected USB devices may be changed.To use the USB hub devices, turn on the GOT with the devices connected.

Installing the USB devices

For GT27 and GT25 equipped with the USB interface (Host) on the front face

1. Push the [PUSH] mark on the USB environmental protection cover to open the cover.
2. Insert the USB device to the USB interface (Host) as shown below.

Make sure to insert the USB interface connector in the correct direction.

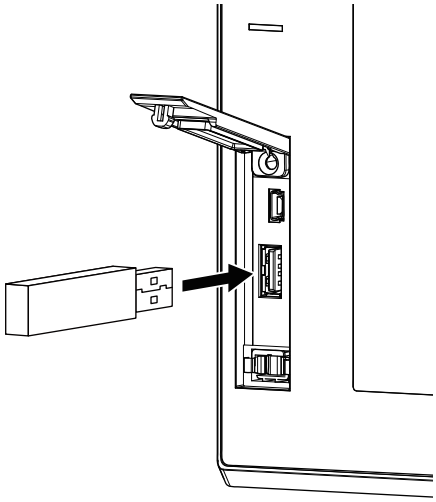

For GT27, GT25, GT23, and GT2107-W equipped with the USB interface (Host) on the rear face

1. Insert the USB device to the USB interface (Host) as shown below.

Make sure to insert the USB interface connector in the correct direction.

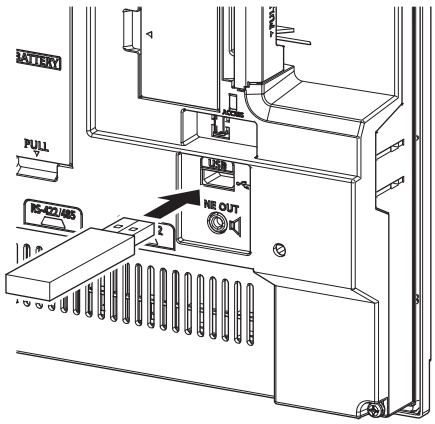

Removing the USB devices

For GT27 and GT25 equipped with the USB interface (Host) on the front face

1. Place the USB device in removable mode.For the setting method, refer to the following.

GOT2000 Series User's Manual (Utility)

2. Remove the USB device from the USB interface (Host) as shown below.

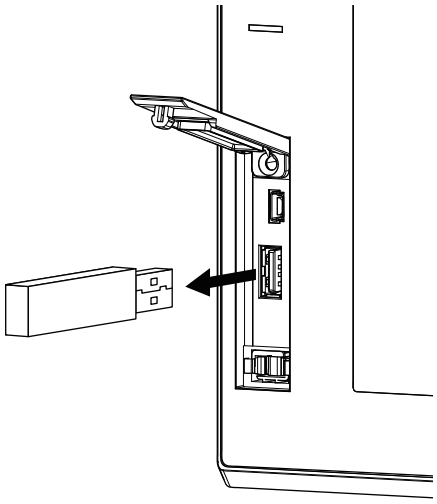

3. Push the [PUSH] mark on the USB environmental protection cover to close the cover.

For GT27, GT25, GT23, and GT2107-W equipped with the USB interface (Host) on the rear face

1. Place the USB device in removable mode.For the setting method, refer to the following.

GOT2000 Series User's Manual (Utility)

2. Remove the USB device from the USB interface (Host) as shown below.

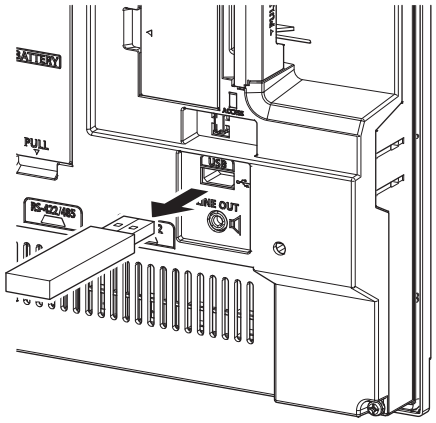

6.15 Installing and Removing the USB cable

The following shows the procedure for installing and removing a USB cable to the USB interface on the GOT rear face.
The locations of the USB interface (Host) and the USB interface (Device) vary by model.
☞ Page 121 PART NAMES AND SETTINGS
Attach a cable clamp depending on the usage environment, such as when fixing a cable is difficult.
Use a cable clamp RSG-130-V0 manufactured by KITAGAWA INDUSTRIES CO.,LTD. or equivalent.

Installing the USB cable

Install the USB cable to the GOT in the following procedure.

1. Install the USB cable to a USB interface (Host/device) on the GOT rear face.

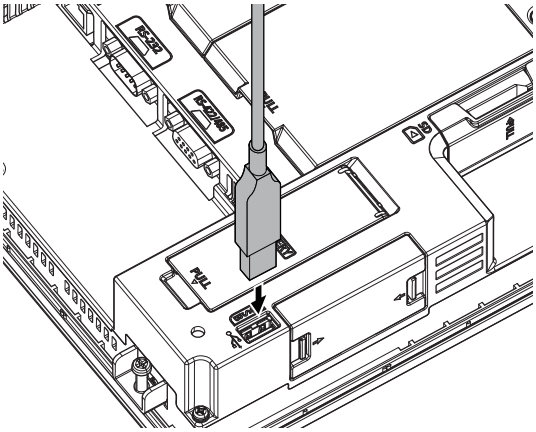

2. Insert a cable clamp to the mounting hole for a cable clamp shown in the following figure and push it until you hear a clicking sound. For the direction that the band goes through, refer to the arrow in the figure.

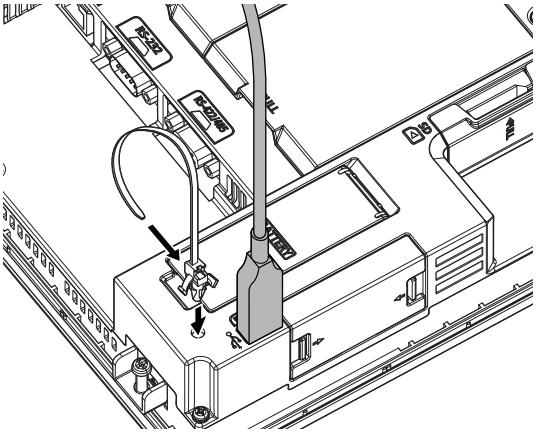

3. Pass the USB cable through a hole of the cable clamp and pull the band to fix the cable.

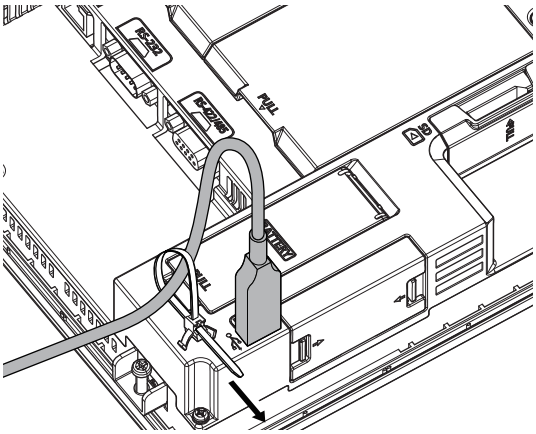

Removing the USB cable

When removing the mounted cable clamp and USB cable, refer to the following procedure.

1. Remove the cable clamp band.

Draw out the band while pushing up the tab of the cable clamp with a screwdriver or other tools.

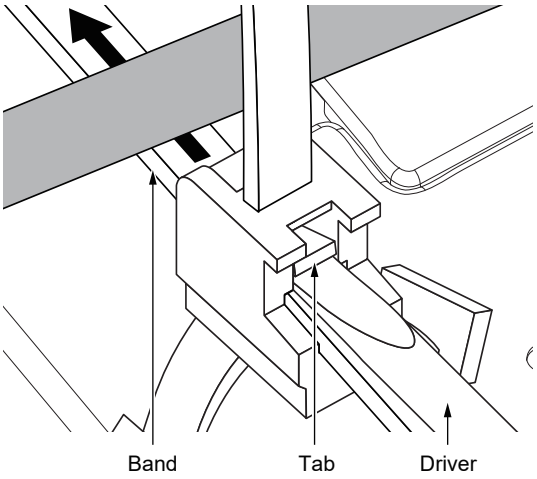

2. Remove the cable clamp while holding its both sides (Arrow A in the figure). Removing the USB cable.

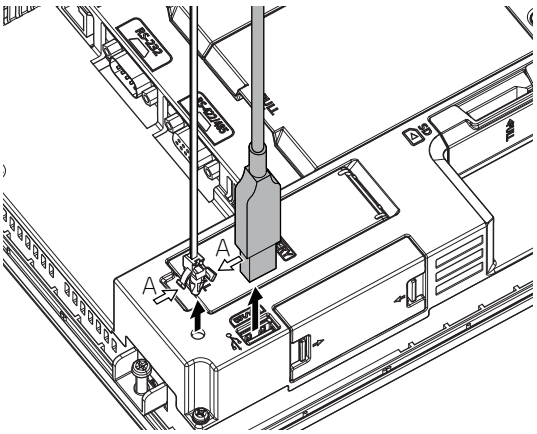

Point

The USB cable can be removed from the unit with the cable clamp. Remove the cable with holding both sides of the cable clamp (Arrow A in the figure).

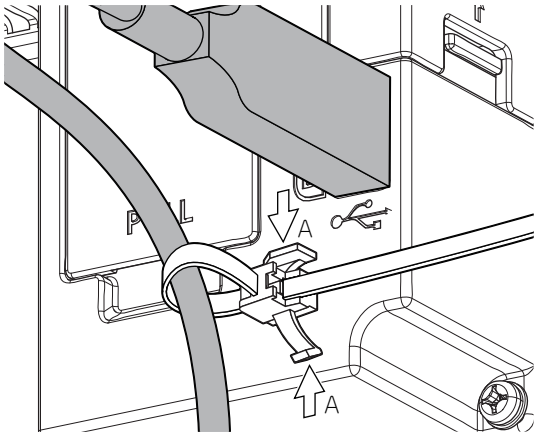

6.16 Installing and Removing the Panel-Mounted USB Port Extension

The panel-mounted USB port extension is a waterproof USB extension cable.

The cable is used to route the USB interface (Host) or USB interface (Device) of the GOT rear face to the front side of the control panel.

Applicable panel-mounted USB port extension

The following panel-mounted USB port extensions are applicable.

○: Applicable, -: Not applicable

Model name	Supported model			
	GT27	GT25	GT23	GT21
GT14-C10EXUSB-4S	○	○	-	○ *1
GT10-C10EXUSB-5S	○ *2	○ *3	-	○ *4

*1 This cable is usable for GT2107-WTBD, GT2107-WTSD.

*2 This cable is usable for GT2712-STWA, GT2712-STWD, GT2710-VTWA, GT2710-VTWD.

*3 This cable is usable for GT2512F-STNA, GT2512F-STND, GT2510-VTWA, GT2510-VTWD, GT2510F-VTNA, GT2510F-VTND, GT2508-VTWA, GT2508-VTWD, GT2508F-VTNA,GT2508F-VTND and GT2507T-WTSD.

*4 This cable is usable for GT2104-RTBD, GT2104-PMBD, GT2104-PMBDS, GT2104-PMBDS2, GT2104-PMBLS, GT2103-PMBD, GT2103-PMBDS, GT2103-PMBDS2, GT2103-PMBLS.

Parts name

The following shows the parts name of panel-mounted USB port extension.

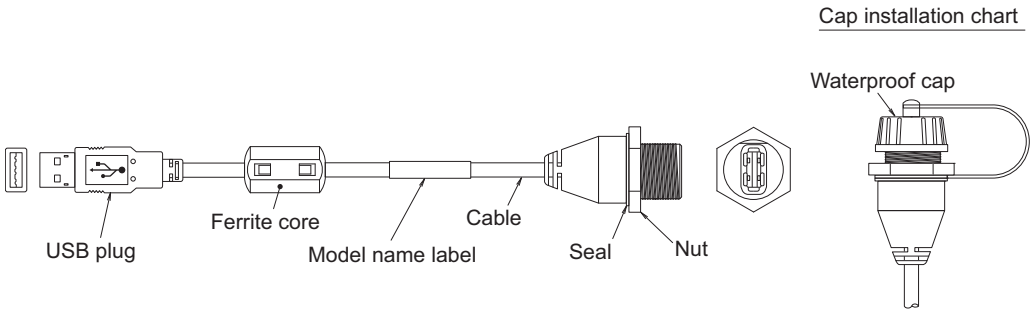

Installing and removing the panel-mounted USB port extension

Installing and removing the panel-mounted USB port extension to/from the control panel

Install or remove the panel-mounted USB port extension as follows with attention to the curve or twist of the waterproof cap, seal, and nut.

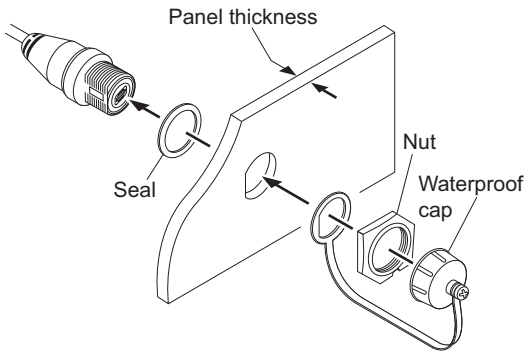

Panel Cutting Dimensions

GT14-C10EXUSB-4S

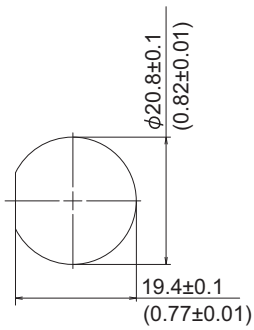

Panel thickness:
2 to 4mm (0.08 to 0.16inch)

Specified torque range:
0.30 to 0.34N・m

GT10-C10EXUSB-5S

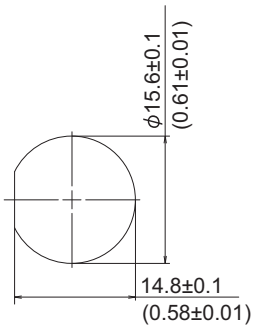

Panel thickness:
1.6 to 2mm (0.06 to 0.08inch)

Specified torque range:
0.28 to 0.32N・m

Install the waterproof cap to the panel-mounted USB port extension so that the control panel surface is IP67F-rated.
Overtightening or undertightening may disable the waterproof effect.
Tighten the waterproof cap properly when the cable is not used.

Precautions on installing the panel-mounted USB port extension

Run power lines, servo amplifier drive wires, and panel-mounted USB port extensions so that they do not cross each other.
Install the panel-mounted USB port extension away from noise sources such as equipment.
Do not twist, bend at a sharp angle or a right angle, and stretch the panel-mounted USB port extension since the cable may be broken.
Install it while considering the following control panel inside dimensions.
Dimensions in the depth direction of the GOT

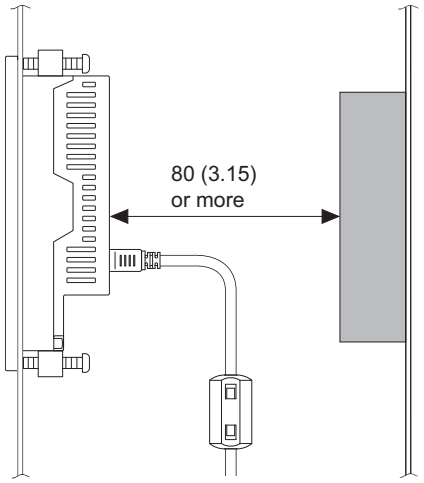

Unit: mm (inch)

Dimension of the protruding cable

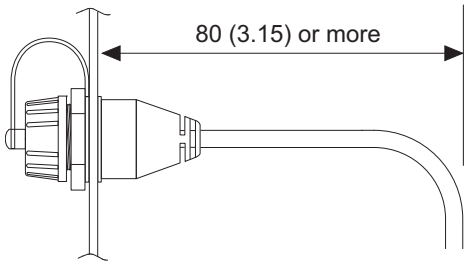

Unit: mm (inch)

Insert the USB plug part of the tip of the panel-mounted USB interface (Host) extension securely to the USB port of the GOT.
The USB plug part may work loose or become unplugged due to vibrations, impacts, or being yanked.
Use cable ties or others to fix the cable portion to the structure inside the control panel, the cable fixing hole on the GOT, or others.

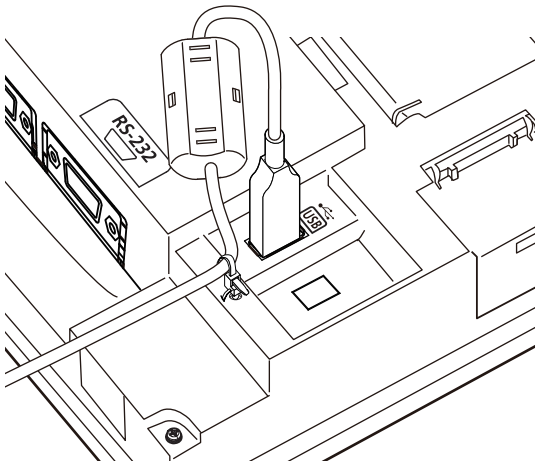

MEMO

7 OPTION AND COMMUNICATION CABLE FOR HANDY GOT

- Page 273 Connector Conversion Box
- Page 306 Emergency Stop Switch Guard Cover
- Page 307 Wall-mounting Attachment
- Page 310 Overview of Communication Cable
- Page 314 External Cable, Relay Cable

7.1 Connector Conversion Box

The Handy GOT can monitor a PLC CPU or other controllers through the connector conversion box.
For the PLC CPU that can be monitored, refer to the following.
GOT2000 Series Handy GOT Connection Manual For GT Works3 Version1
The connector conversion box supplies power to the power supply input terminal of the Handy GOT, and relays signals from the emergency stop switch of the GOT.
The connector conversion box has a mechanism to mount or demount the Handy GOT in operation.

Applicable connector conversion box

The following connector conversion box is applicable to the Handy GOT.
○: Usable, -: Not usable

Product name	Model	Content	GT2506HS-V	GT2505HS-V
Connector conversion box	GT16H-CNB-42S	Gasket for panel installation × 1 (accessory), flange for GT10-9PT5S × 1 (accessory) Screws for flange installation (M3 × 8) × 2 (accessory)	○	○
	GT16H-CNB-37S	Bracket for installing a connector conversion box on the panel × 1 (accessory) Screws for installing the bracket (M3 × 8) × 3 (accessory)	○	○
	GT11H-CNB-37S		—	○

Connector conversion box (GT16H-CNB-42S)

Specifications

■General specifications

Other specifications are the same as Handy GOT.

Item	Specifications				
Operating ambient temperature	0 °C to 55 °C				
Storage ambient temperature	-20°C to 70°C				
Vibration resistance	When installing DIN rail	Frequency	Acceleration	Half-amplitude	Sweep count
		5 Hz to 8.4 Hz	—	1.75 mm	10 times each in X, Y and Z directions
		8.4 Hz to 150 Hz	4.9 m/s^2	—	

■Power supply specifications

Other specifications are the same as Handy GOT.

Item		Specifications
Input power supply voltage		24 V DC (+10% -15%)
Power consumption		13.7 W or less (570 mA/24 V DC) (When including the consumption current of Handy GOT)
	Connector conversion box only	2.2 W (90 mA/24 V DC) (When excluding the consumption current of Handy GOT)
Inrush current		25 A or less (at max. load) 2 ms
Permissible instantaneous power failure time		Within 5 ms

■Internal relay contact specifications

Item	Contact rating	Specifications
Operation switch SW1 to SW6	10 mA/24 V DC (resistance load only)	Each contact coordinates the operation switch status of Pressed (close)/Not pressed (open). When the external cable is not connected, contacts are always open regardless of the switch status.
Emergency stop switch ES1A to ES3A	1 A/24 V DC (resistance load) 0.3 A/24 V DC (induction load)	Each contact coordinates the emergency stop switch status of Pushed (open)/Return (close). When the external cable is not connected, contacts are always open regardless of the emergency stop switch status. Causing a short circuit of the ES □ B terminal which is close to the ES □ A terminal by a short pin (prepared by user) enables to set each contact in the close status even if the external cable is not connected. *1 ☞ Page 354 Emergency stop switch wiring When using the short-circuited ES □ B terminal which is close to the ES □ A terminal • Contacts are normally operated in the close status. When pushing the emergency stop switch, the contacts become open. • In the following situations, contacts are closed regardless of the status of the emergency stop switch and the external cable. When GT16H-CNB-42S is turned OFF When GT16H-CNB-42S is not supplied with the power supply (24 V DC)
Grip switch DSW1, DSW2	1 A/24 V DC (resistance load) 0.3 A/24 V DC (induction load)	Each contact coordinates the grip switch status of Pressed (close)/Not pressed (open). When the external cable is not connected, contacts are always open regardless of the grip switch status.
Keylock switch (2-position switch) KSWC, KSW1, KSW2	1 A/24 V DC (resistance load) 0.3 A/24 V DC (induction load)	Each contact coordinates the position of the keylock switch. • When the key is on the left: KSW1 and KSWC are short-circuited. • When the key is on the right: KSW2 and KSWC are short-circuited. When the external cable is not connected, contacts are always open regardless of the keylock switch.

*1 The system may not match the safety standards.
Before using the system, please check the safety standards which are required.

Part name and external dimensions (GT16H-CNB-42S)

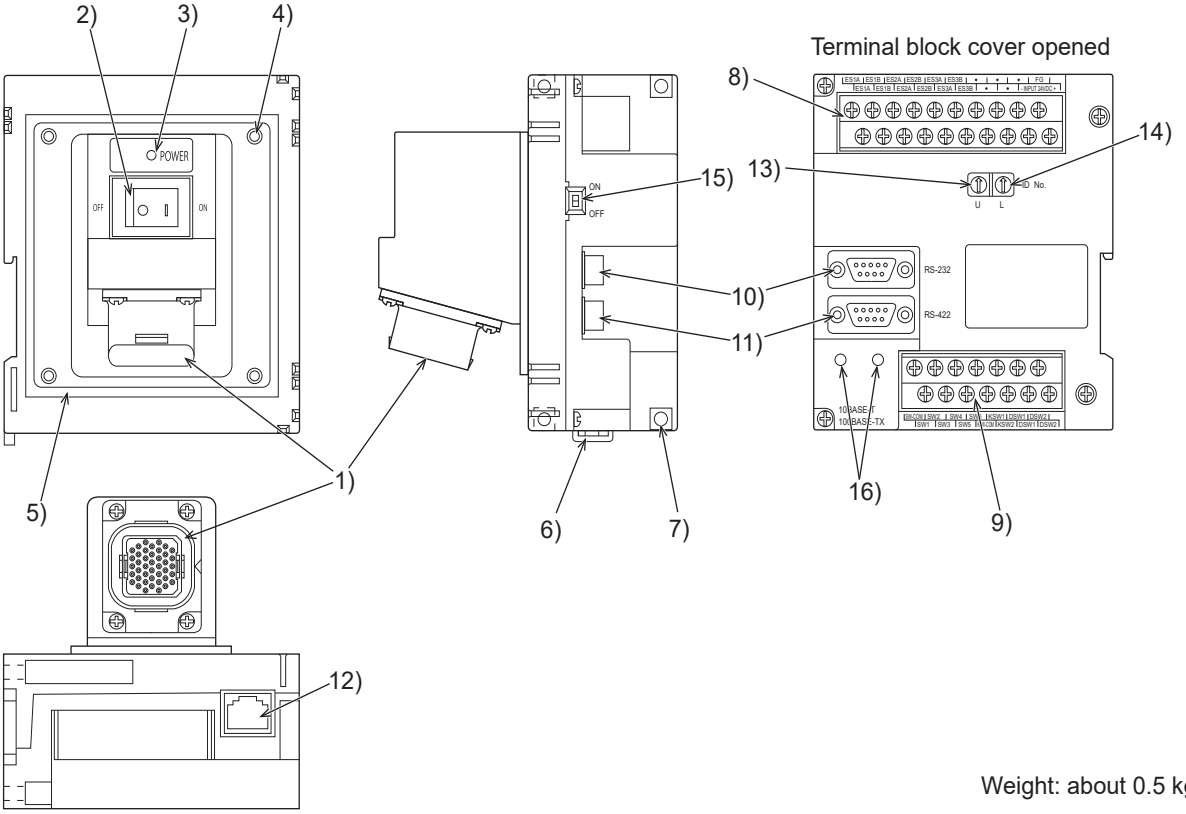

Weight: about 0.5 kg

No.	Name	Specifications
1)	Connector for Handy GOT (42-pin female)	Connects the Handy GOT through an external cable.
2)	Power switch	Supplies the power to the Handy GOT. When this switch is set to ON, the power is supplied. Turn off the power when attaching or detaching the Handy GOT.
3)	POWER LED	Lit in green: Power is correctly supplied. Not lit: Power is not supplied.
4)	Hole for the panel installation	Used to install the gasket when the panel is mounted. For M4 screw, depth 6 mm
5)	Gasket attachment groove	Used to install the gasket when the panel is mounted.
6)	Hook for DIN rail	Used for fixing the connector conversion box when mounting DIN rail (35 mm).
7)	Hole for the screw installation	Used for fixing on the board, etc. For M4 screw
8)	Terminal block 1	Connects the GT16H-CNB-42S, the 24 V DC power supply of Handy GOT, and the emergency stop switch (ES1 to 3) with M3 terminal screws and the cover.
9)	Terminal block 2	Connects the operation switch of the Handy GOT (SW1 to 6), the grip switch (DSW-1, 2) and the keylock switch (KSW-1, 2) with M3 terminal screws and the cover.
10)	External connection device communication connector (RS-232: D-sub 9-pin male) Connector model name: JES-9P-2A3A (JST) or equivalent	• GT2506HS-V For connecting with a controller (RS-232 connector and RS-422/485 connector cannot be used at the same time.) • GT2505HS-V Cannot be used for GT2505HS-V. For connecting the GT2505HS-V and a connector conversion box via the RS-422 or RS-232 interface, use a connector conversion box (GT11H-CNB-37S). ☞ Page 300 Connector conversion box (GT11H-CNB-37S)
11)	External connection device communication connector (RS-422/485: D-sub 9-pin female) Connector model name: 17JE-13090-37D23A (DDK) or equivalent	
12)	External connection device communication connector (Ethernet: RJ45 module jack)	Connects the external connection device via Ethernet with using a LAN cable.
13)	Rotary switch (U)	Sets the ID number of GT16-CNB-42S. Sets one ID number using both rotary switches (U) and (L).
14)	Rotary switch (L)	
15)	ID number valid/invalid selection switch	Enables the recognition function of ID number (ON=Valid, OFF=Invalid). When connecting the external connection device with using 10) and 11), set OFF (invalid).
16)	Hole for the flange installation	Used for fixing the flange when using the connector conversion adapter.

Part name and External dimensions (GT16H-CNB-42S)

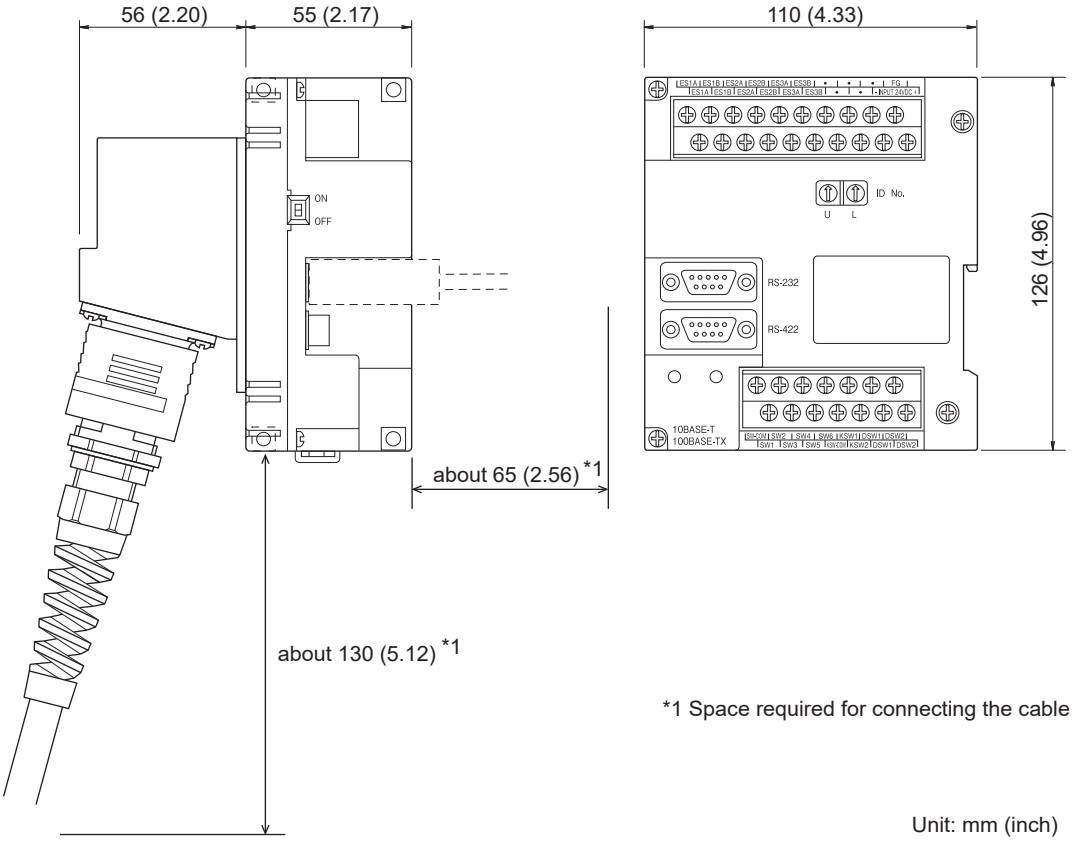

*1 Space required for connecting the cable

Unit: mm (inch)

Installation (GT16H-CNB-42S)

The connector conversion box can be installed on the panel face directly or on the DIN rail.

■Mounting on the panel face (When setting the connector for Handy GOT and the power supply switch on the panel surface)

1. Open an installation hole on the control panel with the dimensions shown below.

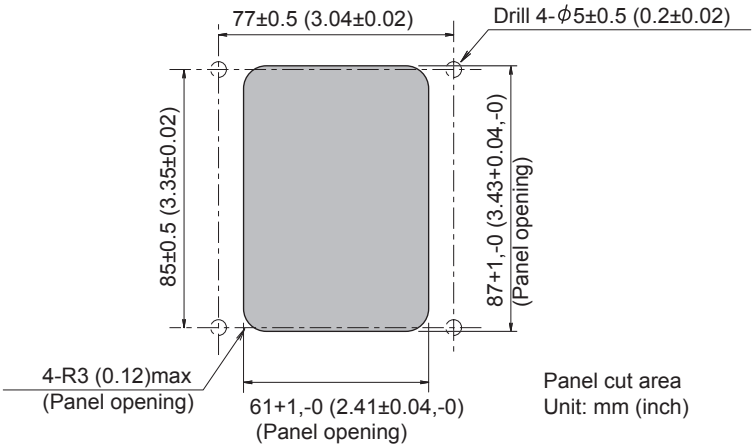

2. Install the accessory gasket to the attachment groove of the connector conversion box.

Be sure to install the gasket.

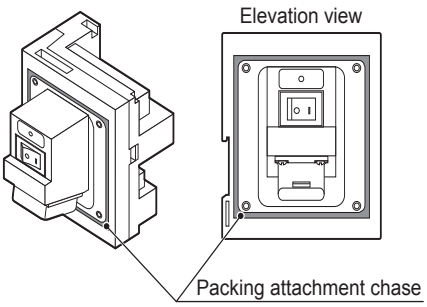

3. Fit the connector conversion box into the installation hole from the back side of the control panel, and fix the box with four M4 screws (user prepared).

In the connector conversion box, thread of M4, 6 mm in depth is cut in each mounting hole.

Prepare four M4 mounting screws separately while considering the thickness of the panel face.

Tighten the screws within the specified torque range (0.69 N•m to 0.88 N•m).

Overtightening the screws may cause damage.

To connect a PLC connection cable, make sure that no object is located within 65 mm from the back side of the connector.

Also, make sure that interfering objects are not located within 25 mm from the upper side so that the terminal block is not hindered.

Make sure that interfering objects are not located within 50 mm from the lower side so that the Ethernet port and terminal block are not hindered.

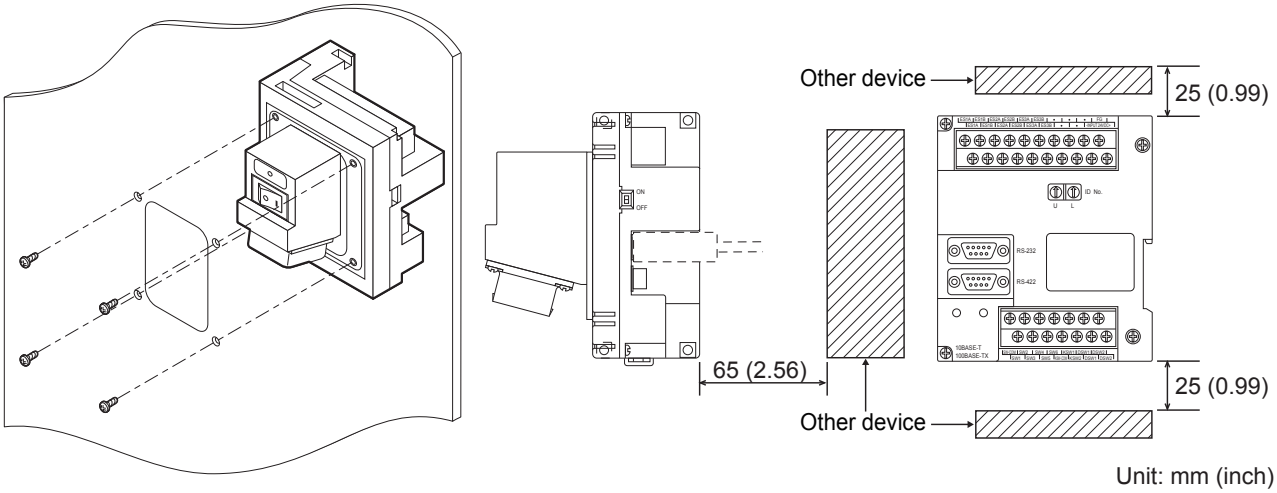

Unit: mm (inch)

■Mounting on the panel face (When setting the connector for Handy GOT and the power supply switch on the panel surface)

1. Open an installation hole on the control panel with the dimensions shown below.

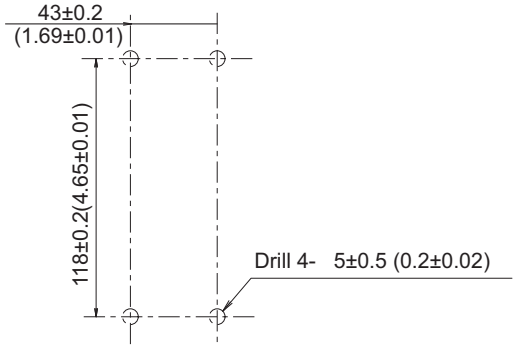

Panel cut area
Unit: mm (inch)

2. Mount the connector conversion box on the control panel.

Tighten the screws within the specified torque range (0.69 N•m to 0.88 N•m).

Overtightening the screws may cause damage.

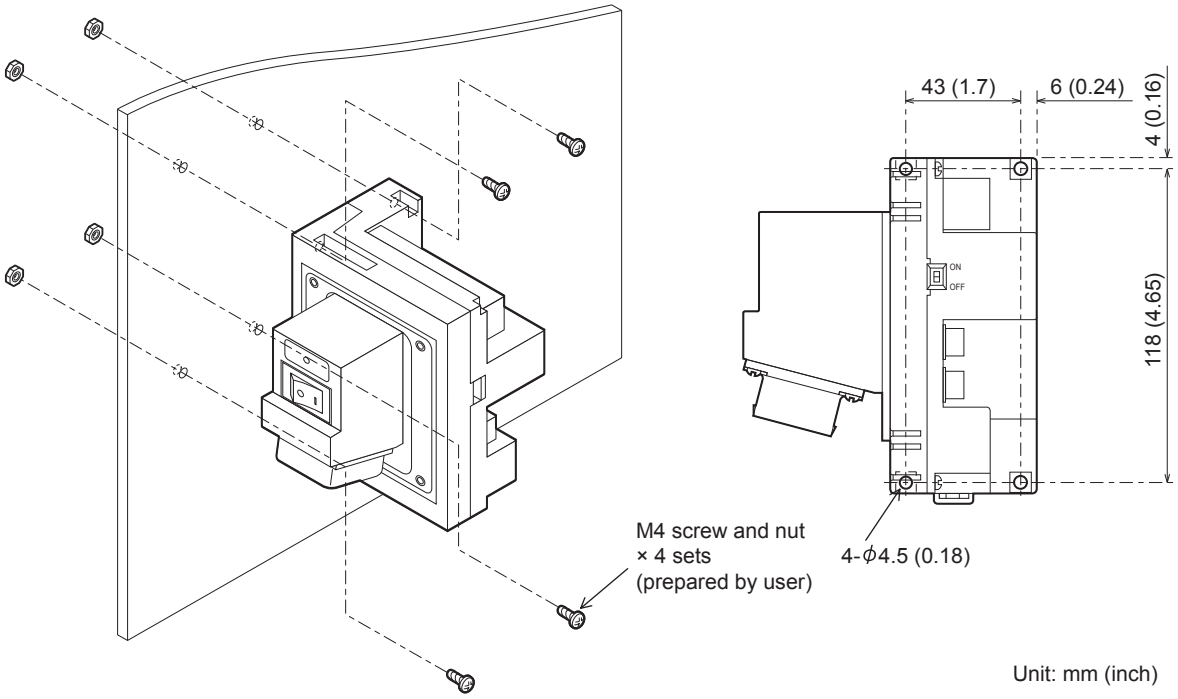

Unit: mm (inch)

■Installation on the DIN rail

Install the connector conversion box on the DIN rail with using its DIN rail hook.

Applicable DIN rail	DIN46277 (width: 35 mm)

The clearance between screws for installing the DIN rail should be 150 mm or less.

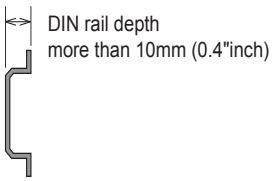

1. Pull out the hook for DIN rail.

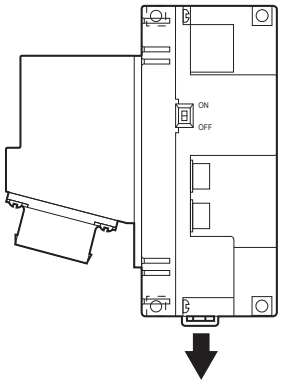

2. Adapt the upper side of the DIN rail installation slot to the DIN rail.

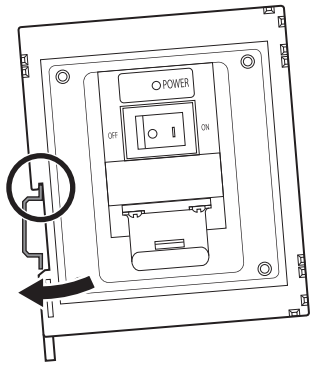

3. Press the connector conversion box against the DIN rail, and lock the hook for DIN rail.

When installing the DIN rail, fix the cables.

Otherwise, the hook for DIN rail and other parts may be damaged by the cable load.

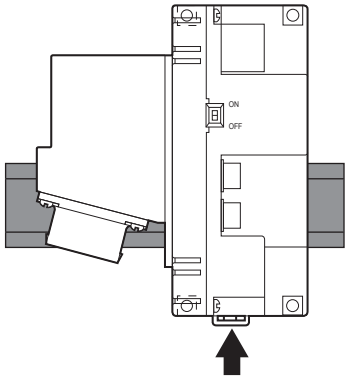

Connector conversion adapter installation

Installing the connector conversion adapter and the flange is required to connect the RS-485 unfastened cable with the connector conversion adapter.

■Installation of the connector conversion adapter GT10-9PT5S (sold separately) and the flange (packed together with the connector conversion box)

Install to the adapter and the flange with two screws which are packed together with the connector conversion adapter.

Tighten the screws within the specified torque range (0.3 N•m to 0.6 N•m).

Tightening screws too much may cause damage on the connector conversion adapter.

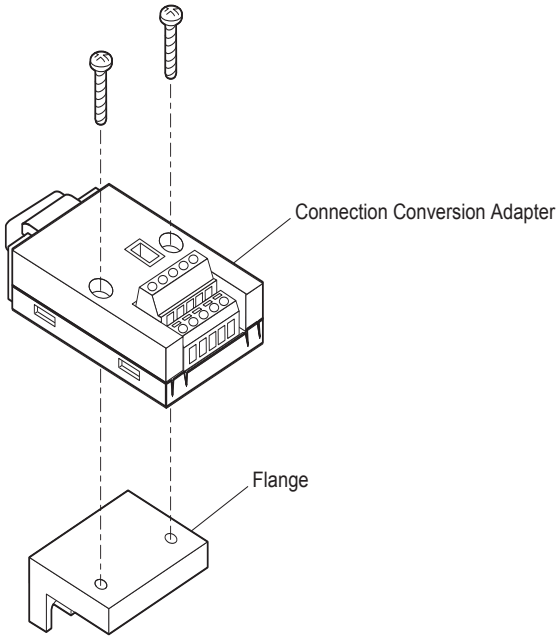

■Installation to the connector conversion box

Mount the connector conversion adapter to the RS-422/485 connector of the connector conversion box and fix them with two screws which are packed together with the connector conversion box.

Tighten the screws within the specified torque range (0.3 N•m to 0.6 N•m).

Tightening screws too much may cause damage on the connector conversion box and the flange.

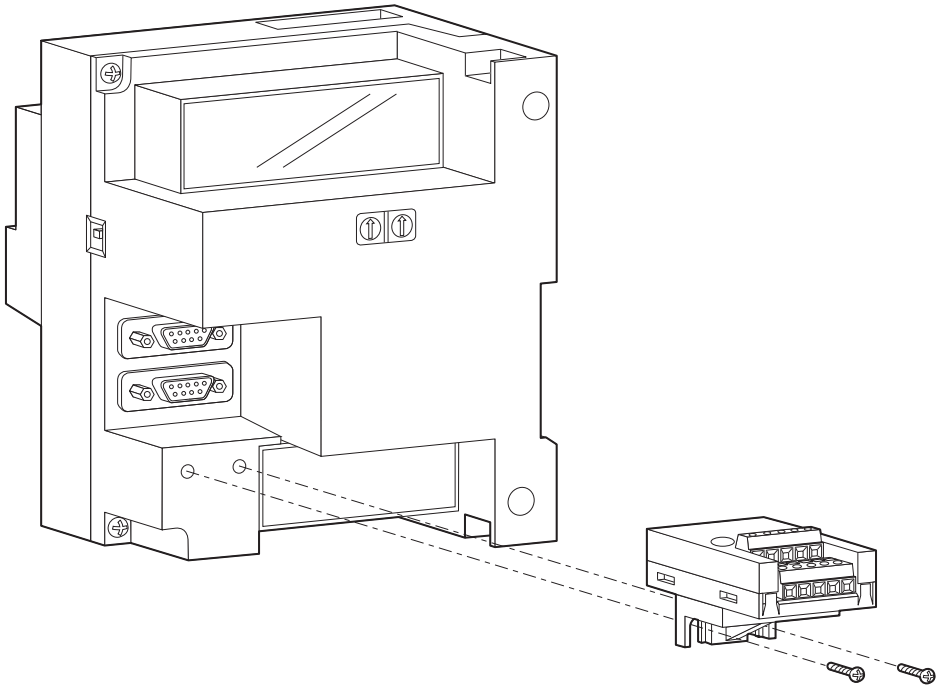

Wiring to the connector and the terminal block

■Pin assignment and signal names

The 42-pin connector of the external cable is converted to the PLC connection connector (D-sub 9-pin, module jack) and the following terminal block.

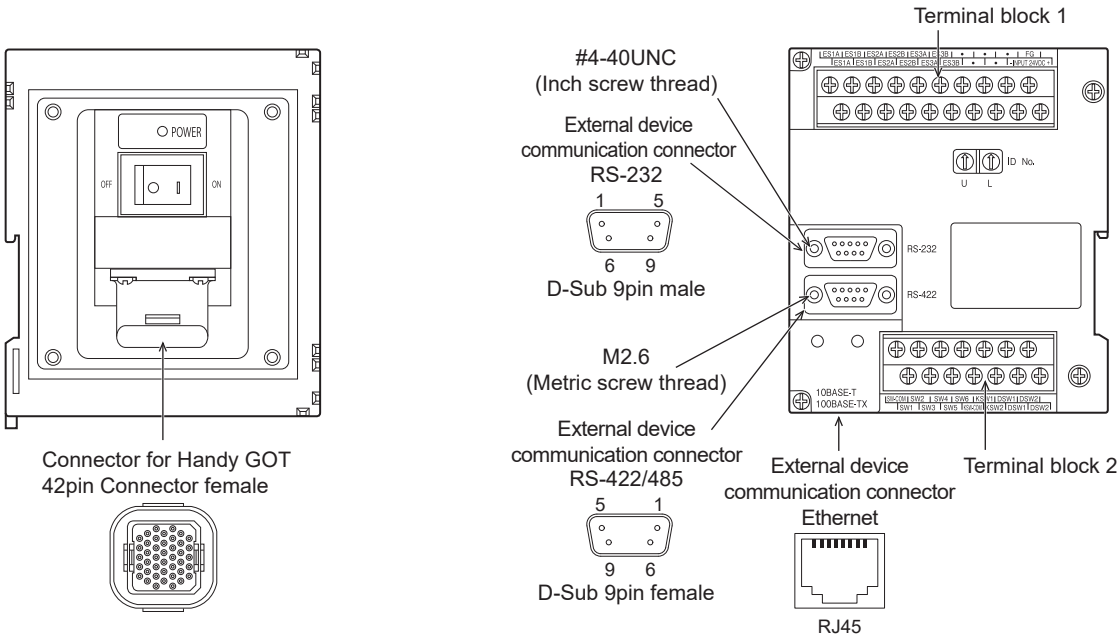

- External device communication connector RS-422/485 (D-sub 9-pin female)

GT16H-CNB-42S		Application
External device communication connector RS-422/485		
Pin No.	Signal name	
1	TXD+(SDA)	Signal line for external device communication For wiring, refer to the following. GOT2000 Series Connection Manual For GT Works3 Version1 that covers the controller used
2	RXD+(RDA)	
3	RTS+(RSA)	
4	CTS+(CSA)	
5	SG	
6	TXD-(SDB)	
7	RXD-(RDB)	
8	RTS-(RSB)	
9	CTS-(CSB)	

- External device communication connector (RS-232 (D-sub 9-pin male))

GT16H-CNB-42S		Application
External device communication connector RS-232		
Pin No.	Signal name	
1	CD	Signal line for external device communication For wiring, refer to the following. GOT2000 Series Connection Manual For GT Works3 Version1 that covers the controller used
2	RXD(RD)	
3	TXD(SD)	
4	DTR(ER)	
5	SG	
6	DSR(DR)	
7	RTS(RS)	
8	CTS(CS)	
9	N.C	

• Terminal block 1, 2

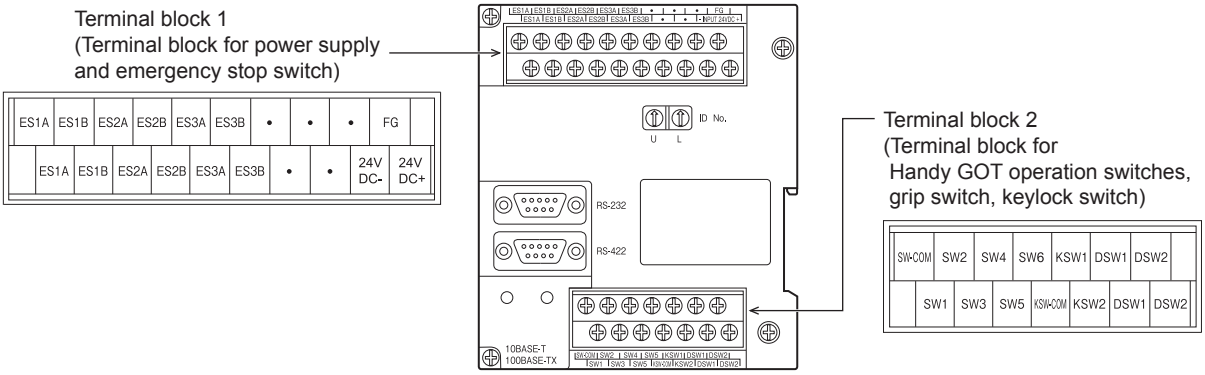

Terminal block 1

GT16H-CNB-42S		Application
Terminal block 1		
Terminal No.	Signal name	
1	24VDC+	24 V DC power supply "+"
2	FG	Frame ground
3	24VDC-	24 V DC power supply "-"
4	—	Not used
5	—	
6	—	
7	—	
8	—	
9	ES3B	For Emergency stop switch
10	ES3B	
11	ES3A	
12	ES3A	
13	ES2B	
14	ES2B	
15	ES2A	
16	ES2A	
17	ES1B	
18	ES1B	
19	ES1A	
20	ES1A	

Terminal block 2

GT16H-CNB-42S		Application
Terminal block 2		
Terminal No.	Signal name	
1	SW-COM	For Operation switch
2	SW1	
3	SW2	
4	SW3	
5	SW4	
6	SW5	
7	SW6	
8	KSW-COM	For Keylock switch
9	KSW1	
10	KSW2	
11	DSW1	For Grip switch
12	DSW1	
13	DSW2	
14	DSW2	

■Wiring to the terminal block

Terminal screws are M3.

Wire as described below.

Do not tighten the terminal screws with a torque outside the specified range.

Doing so can cause a failure or malfunction.

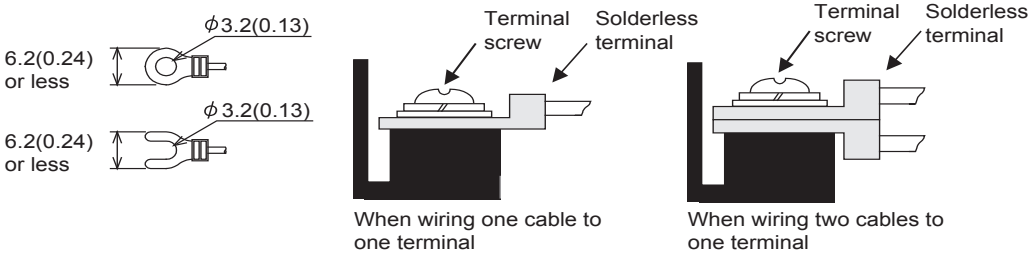

Unit: mm (inch)

Wire size	For power supply: 0.75 mm^2 or more, For grounding: 2 mm^2 or more
Solderless terminal	Solderless terminal for M3 (Applicable solderless terminal: RAA1.25-3, V2-N3A, FV2-N3A)
Tightening torque	0.5 N•m to 0.8 N•m

■Installing and removing of external cable

When installing or removing the external cable from the connector conversion box, make sure that the power switch is turned OFF.

Connect the external cable with the connector conversion box in the same procedure as connecting the external cable with Handy GOT.

Refer to the following.

☞ Page 319 Installing and removing of external cable

ID recognition function

When the Handy GOT is connected to a PLC CPU or other controllers by Ethernet, the GOT can acquire the ID number (set by the rotary switch) from the connector conversion box.

ID number can be used as information for switching the station number.

When the ID number is stored to the station No. switching device by using the trigger action function or the script function, connecting the GOT to the connector conversion box monitors the controller corresponding to the ID number.

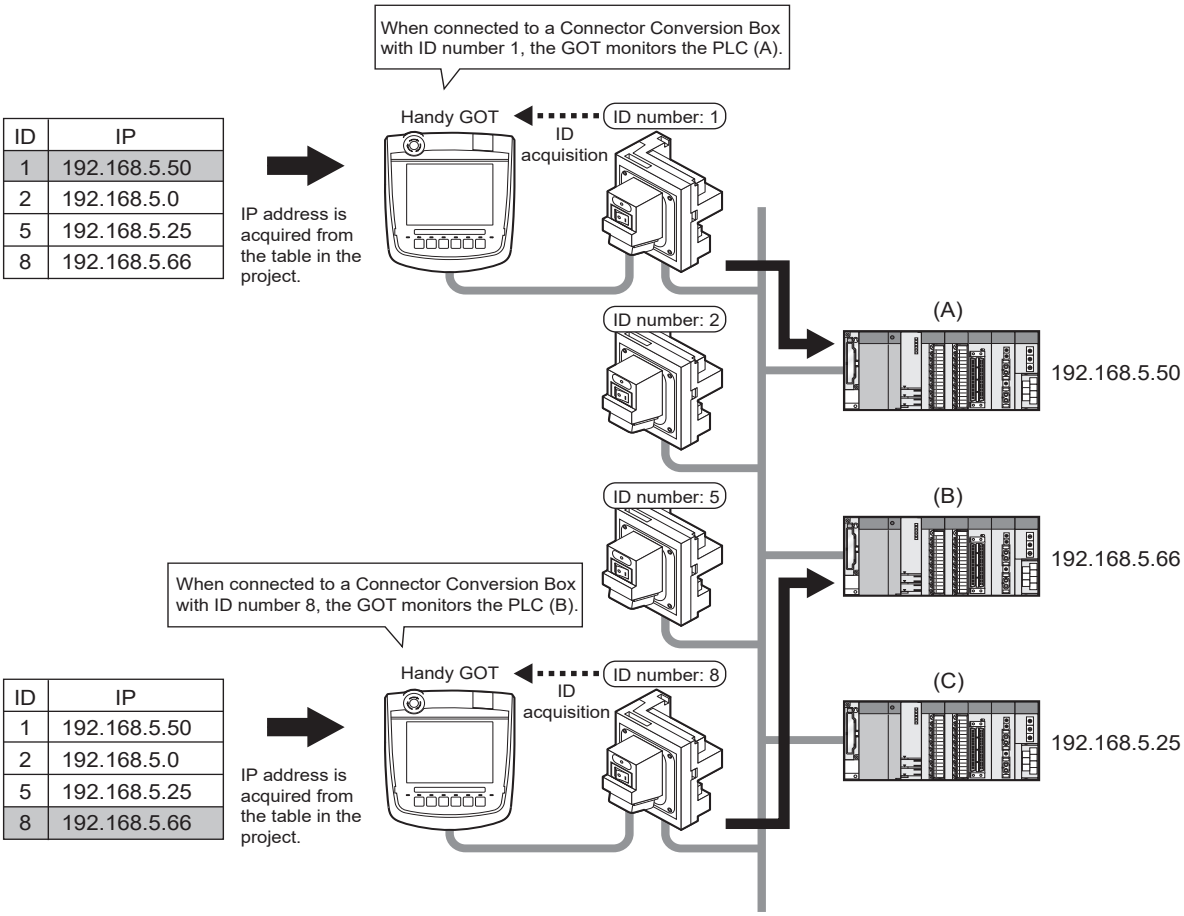

For details on the switching the station number, refer to the following.

GT Designer3 (GOT2000) Screen Design Manual

Point

How to use the ID number recognition function

The ID recognition function is usable only when the Handy GOT is connected with a controller by Ethernet.

To acquire the ID number, establish MODBUS/RTU communications between the RS-232 interface of the Handy GOT and the connector conversion box.

When RS-232 interface is used by the multi-channel function, the ID number recognition function is not available.

■Setting the ID number

Set the ID number with the rotary switch of the connector conversion box.

The setting range is 00_H to FF_H.

Set the second digit of the hexadecimal with U, and the first digit of the hexadecimal with L.

After setting the ID number, turn the ID number valid/invalid selection switch to valid (ON).

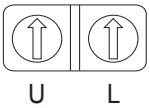

■Handy GOT side settings

Set the RS-232 communication interface of the Handy GOT.

Set the Ethernet interface according to the connected equipment to be monitored.

1. For GT2506HS-V, set the selection connector to the RS-232 interface.

For GT2505HS-V, set the selection connector to the Ethernet interface.

2. Install the communication driver [MODBUS/RTU Master] on the Handy GOT in addition to the Ethernet communication driver for communication with the controller.

3. Make the connected equipment settings of the RS-232 interface.

Select [MODBUS/RTU Master] as the communication driver and set the following items in the communication detail setting.

Item	Set value
Baud rate	19200bps
Data length	8bit
Stop bit	1bit
Parity	Even
Host address	1
32 bit order	LH Order

■Reading the ID number

ID number can be read to Handy GOT by connecting Handy GOT to the connector conversion box.

Handy GOT can acquire ID number by reading the input register 300001.

Point

Station number switching

When the value (ID number) of input register 300001 is read to the station No. switching device by using the trigger action function or the script function, the GOT monitors the controller corresponding to the ID number.

■Example of setting procedure

The following shows an example of the station No. switching setting procedure using the ID recognition function of the connector conversion box.

In this example, the trigger action function is used to set the value of the station No. switching device.

1. Set the ID number of the connector conversion box.

The ID number set with the connector conversion box corresponds to the station number of the PLC to be monitored.

☞ Page 286 Setting the ID number

2. Switch the serial communication interface of the handy GOT.

For GT2506HS-V, set the selection connector to the RS-232 interface.

For GT2505HS-V, set the selection connector to the Ethernet interface.

☞ Page 312 Selection of RS-232 connection and RS-422/485 connection (GT2506HS-V)

☞ Page 313 Selection of the RS-232 connection, RS-422 connection, or Ethernet connection

3. Install the communication driver to the handy GOT.

Install the following communication drivers on the Handy GOT: Ethernet communication driver for communication with the controller and the [MODBUS/RTU Master] communication driver for communication with the connector conversion box.

☞ Page 287 Handy GOT side settings

4. Make the controller settings of the project data to be transferred to the handy GOT.

Controller setting

Configure the settings to connect the GOT by Ethernet.

Set all PLCs which the GOT may be connected to via Ethernet.

In this example, [Net No.] is fixed to 1.

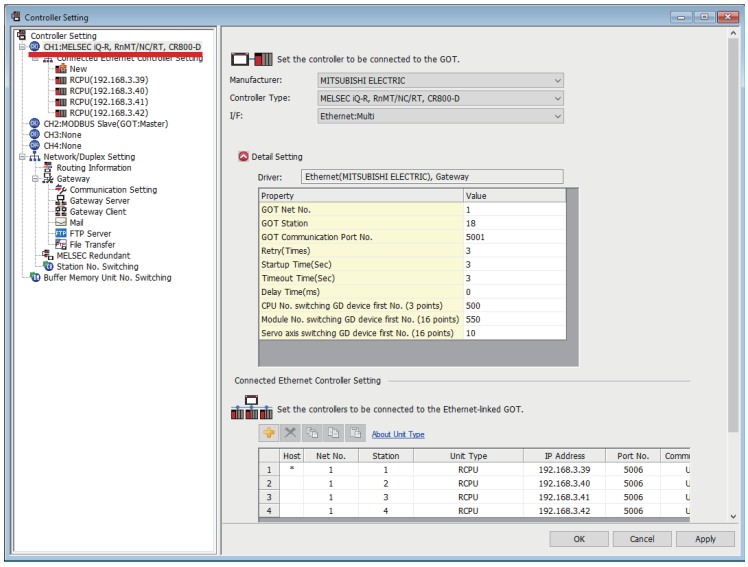

Make the MODBUS/RTU communication settings using RS-232 to connect the GOT to the connector conversion box.

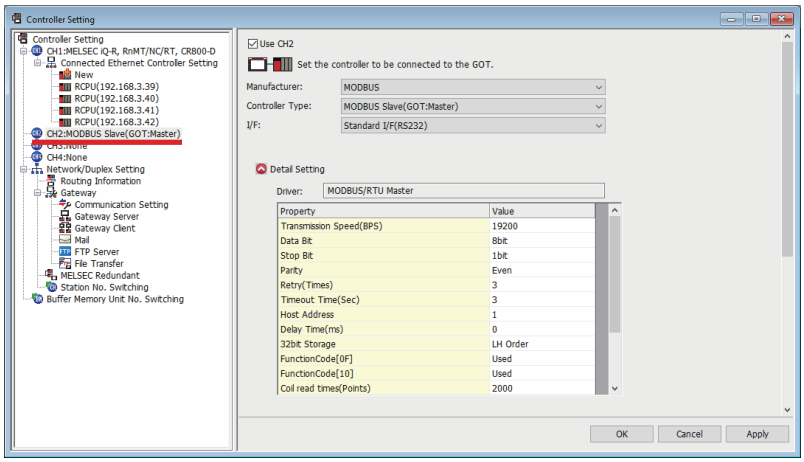

Station No. switching device setting

Select [Use Station No. Switching] to set the device that specifies the station No. of the connected PLC.

In this example, the GOT internal device GD500 is set.

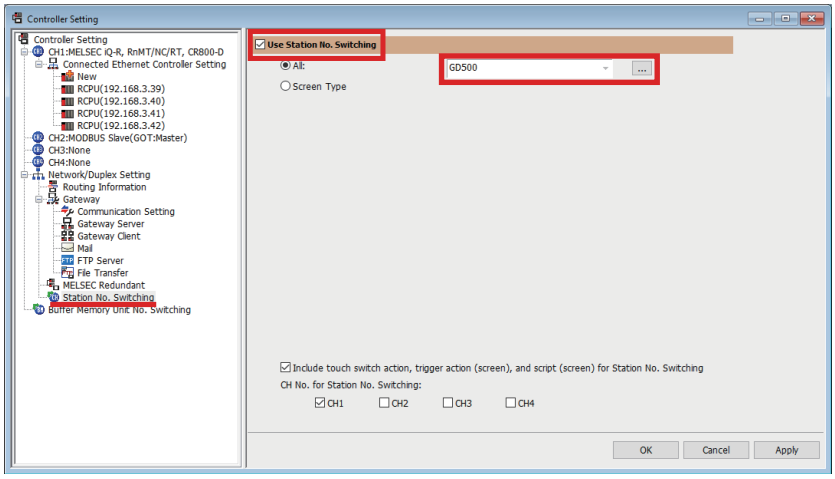

5. Set the trigger action function.

Operation trigger setting

Set the GOT internal device GB40 (always ON during the GOT operation) as the trigger of the target action.

Select [Common] → [Trigger Action] from the menu to display the [Trigger Action] dialog.

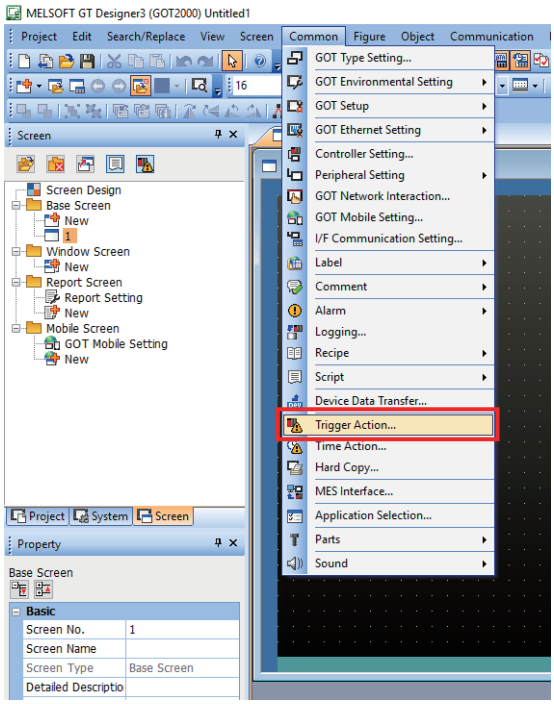

Click the [Add] button in the [Project] tab.

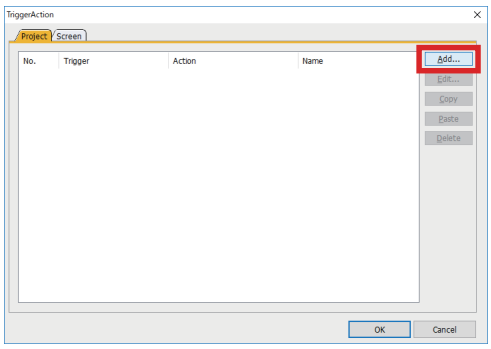

In the [Trigger] tab, set [ON] for [Trigger Type] of Trigger 1.
Set [GB40] for [Trigger Device].

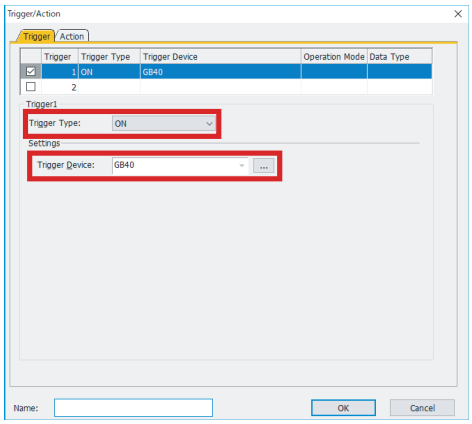

Operation setting
Store the value set by the rotary switch to the station No. switching device (GD500).
The station No. switching device stores unsigned 16-bit data. The 8 higher-order bits represent a network number, and the 8 lower-order bits represent a station number.
Configure the following settings.
In the [Action] tab, set [Data Set 16bit] for [Action] and [Unsigned BIN16] for [Data].
Set a station No. switching device [GD500] to [Device].
To set the rotary switch value of the connector conversion box, select [Indirect].
Click the [...] button to display the [Select CH No.] dialog.

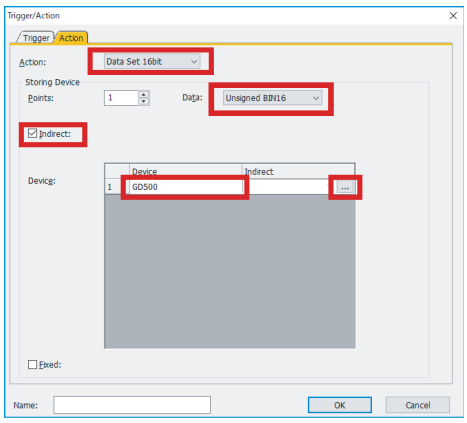

In the [Select CH No.] dialog, select [MODBUS Slave(GOT:Master)]) to display the device setting dialog.

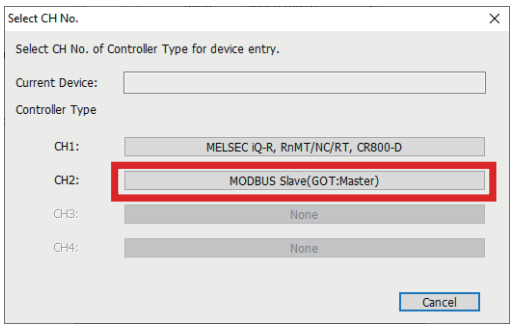

Input 3-00001 to Device.

Select [Host] for Network.

Click the [OK] button when settings are completed.

3-00001 is a fixed register to access to the rotary switch of the connector conversion box by the MODBUS communication.

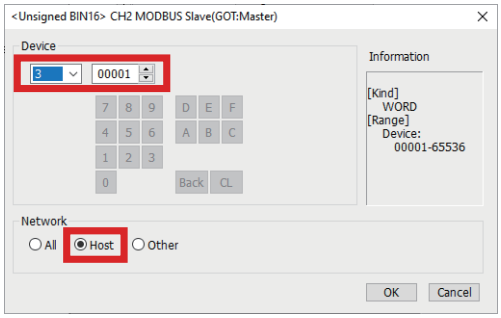

In the [Action] tab, check that [@2 300001] is displayed in [Indirect].

Tick the check box of [Fixed] and enter 256.

Since [Net No.] is fixed to 1, 256 is entered.

For [Fixed], enter the value calculated by the expression 256 × [Net No.].

Click the [OK] button when entering is completed.

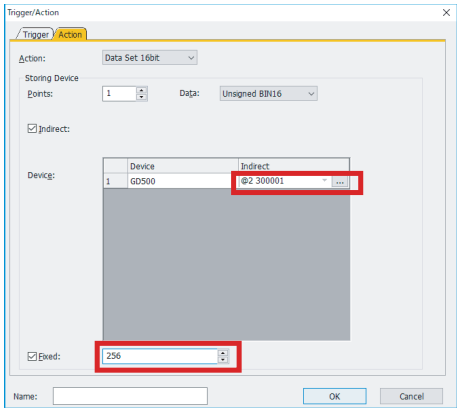

After checking that both Trigger and Action are set, click the [OK] button.

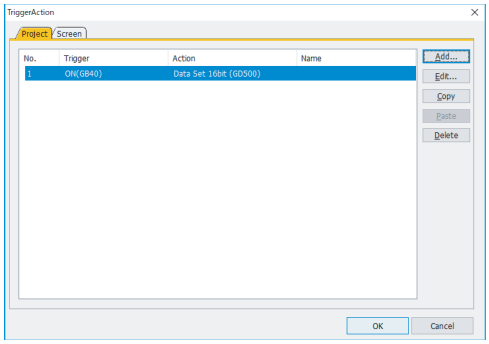

6. Set the project data to use the station No. switching.

Select [Screen] → [Screen Property] from the menu to display the [Screen Property] dialog.

Tick the check box of [Switch Station No.] in the [Basic] tab.

Perform this operation in all screens where the station No. is switched.

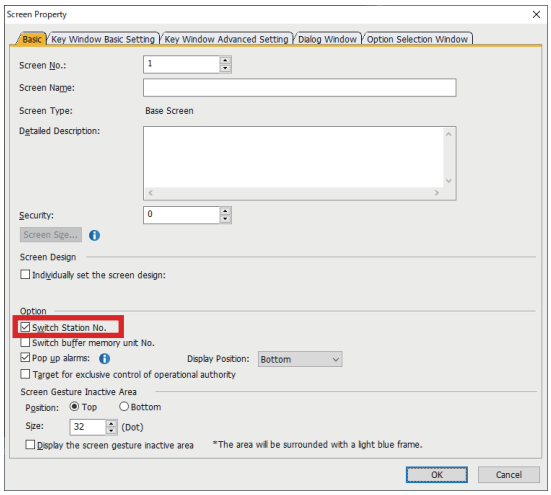

7. Place objects on the screen.

Finally, place objects on the screen.

Select [Host] for [Network].

When the station No. switching device value is 0, the host is monitored.

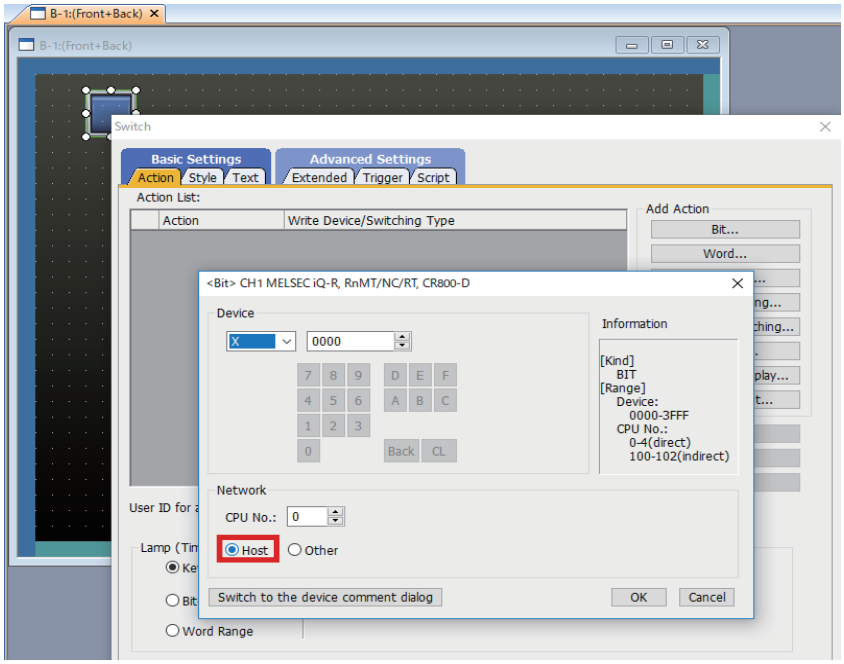

Transfer the project data to the GOT and check the operation.

Connector conversion box (GT16H-CNB-37S)

Specifications

■General specifications

Other specifications are the same as Handy GOT.

Item	Specifications				
Operating ambient temperature	0 °C to 55 °C				
Storage ambient temperature	-20°C to 60°C				
Vibration resistance	When installing DIN rail	Frequency	Acceleration	Half-amplitude	Sweep Count
		5 Hz to 8.4 Hz	—	1.75 mm	10 times each in X, Y and Z directions
		8.4 Hz to 150 Hz	4.9 m/s^2	—	

■Power supply specifications

Other specifications are the same as Handy GOT.

Item		Specifications
Input power supply voltage		24 V DC (+10% -15%)
Power consumption		13.7 W or less (570 mA/24 V DC) (When including the consumption current of Handy GOT)
	Connector conversion box only	2.2 W (90 mA/24 V DC) (When excluding the consumption current of Handy GOT)
Inrush current		25 A or less (at max. load) 2 ms
Permissible instantaneous power failure time		Within 5 ms

■Internal relay contact specifications

Item	Contact rating	Specifications
Operation switch SW1 to SW6	10 mA/24 V DC (resistance load only)	Each contact coordinates the operation switch status of Pressed (close)/Not pressed (open). When the external cable is not connected, contacts are always open regardless of the switch status.
Emergency stop switch ES1 to ES3	1 A/24 V DC (resistance load) 0.3 A/24 V DC (induction load)	Each contact coordinates the emergency stop switch status of Pushed (open)/Return (close). When the external cable is not connected, contacts are always open regardless of the emergency stop switch status.
Grip switch DSW1, DSW2	1 A/24 V DC (resistance load) 0.3 A/24 V DC (induction load)	Each contact coordinates the grip switch status of Pressed (close)/Not pressed (open). When the external cable is not connected, contacts are always open regardless of the grip switch status.
Keylock switch (2-position switch) KSWC, KSW1, KSW2	1 A/24 V DC (resistance load) 0.3 A/24 V DC (induction load)	Each contact coordinates the position of the keylock switch. • When the key is on the left: KSW1 and KSWC are short-circuited. • When the key is on the right: KSW2 and KSWC are short-circuited. When the external cable is not connected, contacts are always open regardless of the keylock switch.

Part name

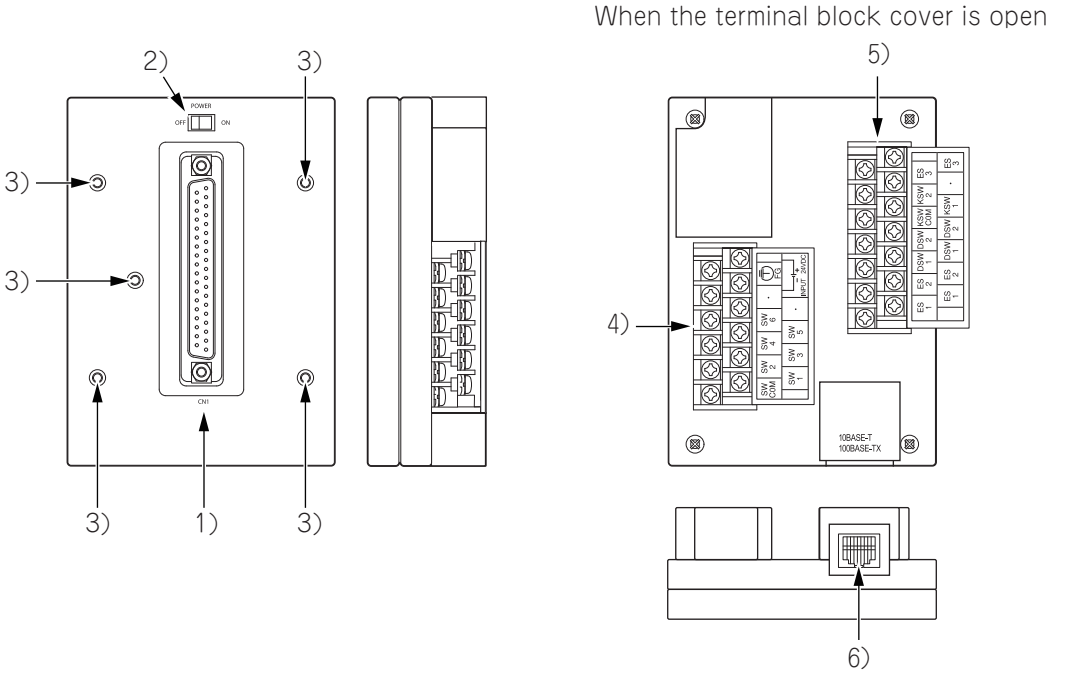

Weight: Approx. 0.2 kg (0.4 lb)

No.	Name	Specifications
1)	Connector for Handy GOT (D-sub 37-pin (female))	Connects the Handy GOT through an external cable.
2)	Power switch	Supplies the power to the Handy GOT, when this switch is set to ON. Turn off the power when attaching or detaching the Handy GOT.
3)	Mounting hole	Used to fix the connector conversion box to a panel directly or to a board with the mounting fixtures. For M3 screw
4)	Terminal block 1	Connects the GT16H-CNB-37S, the 24 V DC power supply of Handy GOT and the operation switch (SW1 to 6). With M3 terminal screws and the cover
5)	Terminal block 2	Connects the emergency stop switch of the Handy GOT (ES1, 2, and 3), the grip switch (DSW-1, 2) and the keylock switch (KSW-1, 2). With M3 terminal screws and the cover
6)	External connection device communication connector (Ethernet: RJ45 modular jack)	Connects the external connection device via Ethernet with using a LAN cable.

External dimensions

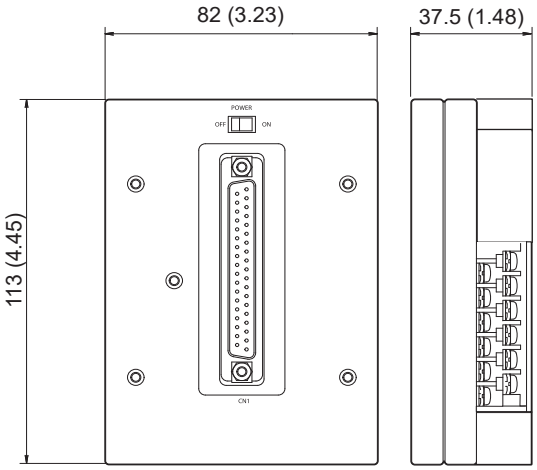

When the terminal block cover is open

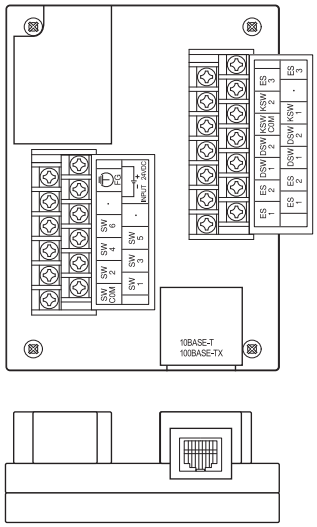

Unit: mm (inch)

Installing a connector conversion box (GT16H-CNB-37S)

Install a connector conversion box on the panel directly or with a mounting bracket.

■Mounting on the panel face (When setting the connector for Handy GOT connection and the power supply switch on the panel surface)

1. Open an installation hole on the control panel with the dimensions shown below.

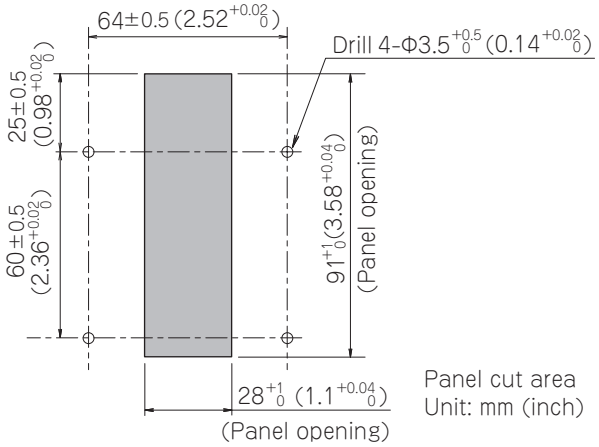

2. Fit the connector conversion box into the installation holes from the back side of the panel, and fix the box with M3 screws (prepared by user).

In the connector conversion box, thread of M3, 6 mm in depth is cut in each mounting hole.

Prepare four M3 mounting screws separately while considering the thickness of the panel face.

Tighten the screws within the specified torque range (0.49 N•m to 0.68 N•m).

Overtightening the screws may cause damage.

To connect a PLC connection cable, make sure that no object is located within 50 mm from the bottom side of the connector.

Keep a space of 25 mm or more on both sides of the connector conversion box.

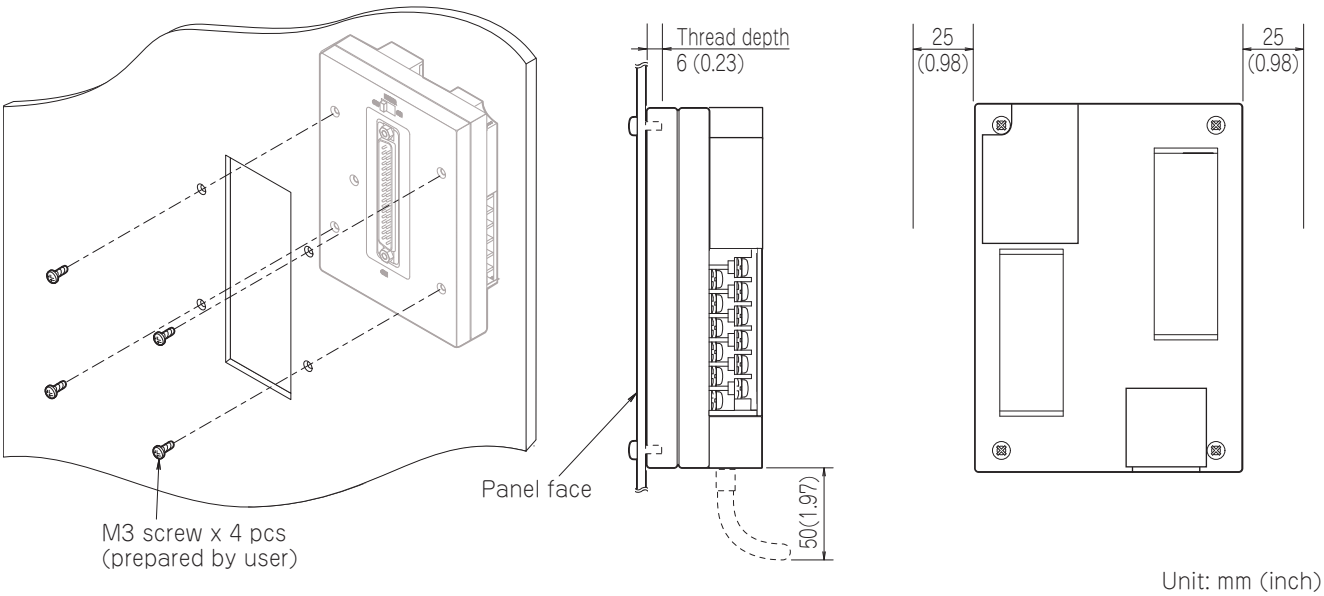

■Installation with the mounting bracket

1. Open an installation hole on the control panel with the dimensions shown below.

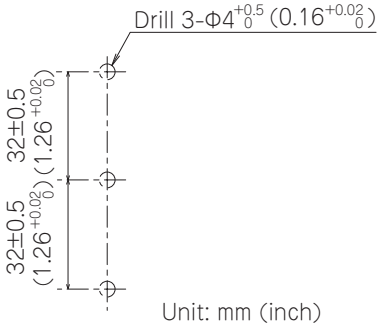

2. Install the supplied mounting bracket on the connector conversion box.

Tighten the screws within the specified torque range (0.49 N•m to 0.68 N•m).

Overtightening the screws may cause damage.

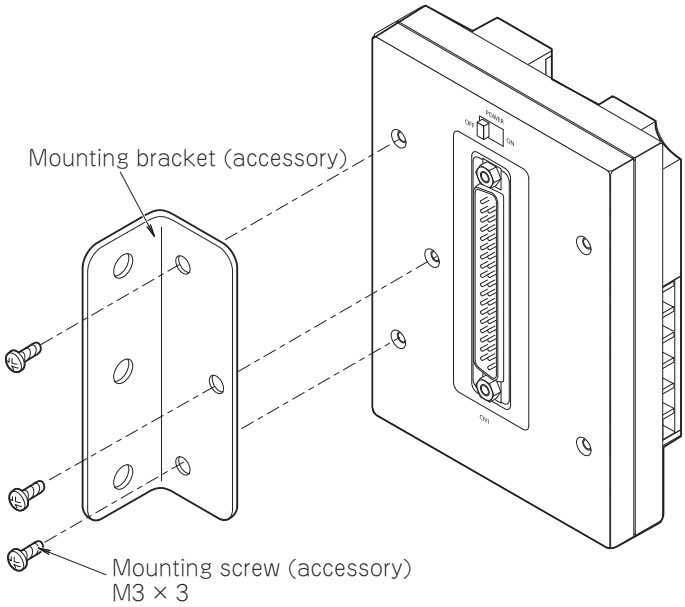

3. Mount the connector conversion box on the control panel.

Tighten the screws within the specified torque range (0.69 N•m to 0.88 N•m).

Overtightening the screws may cause damage.

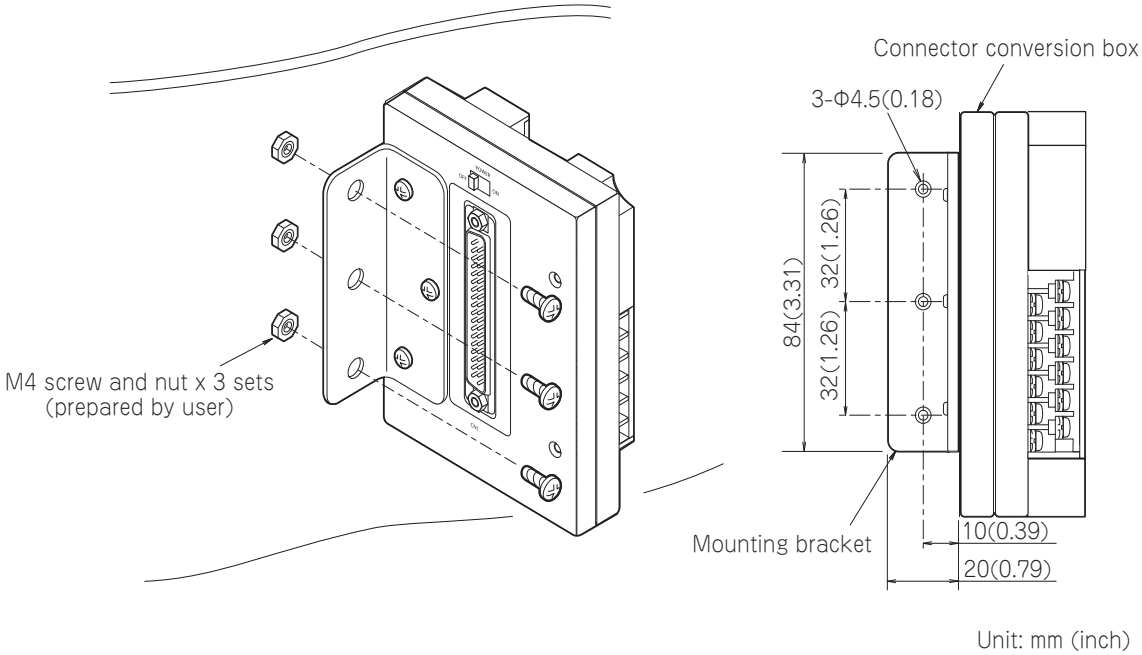

Pin layout and signal names of the connector and terminal blocks

The D-sub 37-pin connector of the external cable is converted to the following terminal blocks and the PLC connection connector (modular jack).

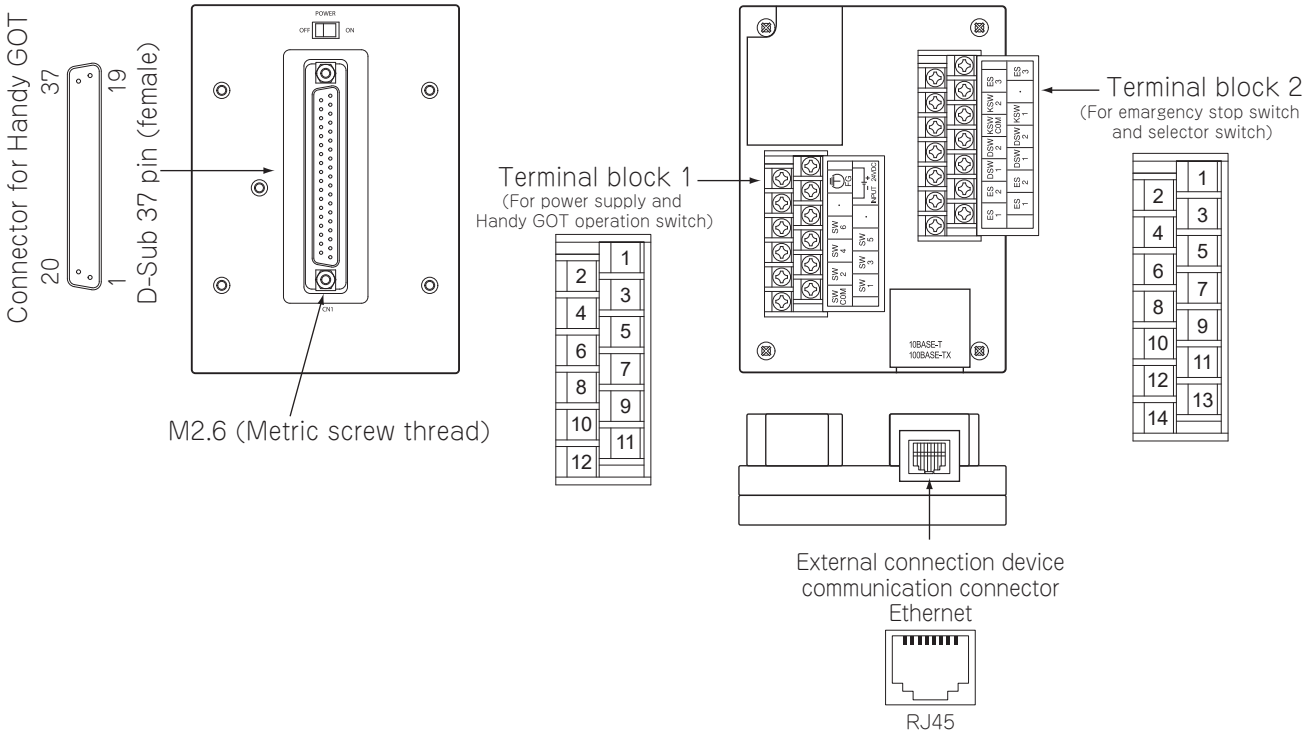

■Terminal block 1, 2

GT11H-C□□-37P *1		GT16H-CNB-37S		Application
Connector for Handy GOT connection		Terminal block		
D-sub 37-pin	Signal name			
36, 37	DC24V+	Terminal block 1	1	24 V DC power supply "+"
1	FG		2	Frame ground
18, 19	DC24V-		3	24 V DC power supply "-"
—	N.C		4	Not used
—	N.C		5	
34	SW6		6	For Operation switch
33	SW5		7	
16	SW4		8	
15	SW3		9	
14	SW2		10	
13	SW1		11	
12	SW-COM		12	
31	ES3	Terminal block 2	1	For Emergency stop switch
32	ES3		2	
—	N.C		3	Not used
30	KSW-2		4	For Keylock switch
29	KSW-1		5	
28	KSW-C		6	
27	DSW-2		7	For Grip switch
26	DSW-2		8	
25	DSW-1		9	
24	DSW-1		10	
23	ES2		11	For Emergency stop switch
22	ES2		12	
21	ES1		13	
20	ES1		14	

*1 Use C or later version of GT11H-C □ □ -37P.

Connector conversion box (GT11H-CNB-37S)

Specifications

■General specifications

Other specifications are the same as Handy GOT.

Item	Specifications				
Operating ambient temperature	0 °C to 55 °C				
Storage ambient temperature	-20°C to 60°C				
Vibration resistance	When installing DIN rail	Frequency	Acceleration	Half-amplitude	Sweep Count
		5 Hz to 8.4 Hz	—	1.75 mm	10 times each in X, Y and Z directions
		8.4 Hz to 150 Hz	4.9 m/s^2	—	

■Power supply specifications

Other specifications are the same as Handy GOT.

Item		Specifications
Input power supply voltage		24 V DC (+10% -15%)
Power consumption		13.7 W or less (570 mA/24 V DC) (When including the consumption current of Handy GOT)
	Connector conversion box only	2.2 W (90 mA/24 V DC) (When excluding the consumption current of Handy GOT)
Inrush current		25 A or less (at max. load) 2 ms
Permissible instantaneous power failure time		Within 5 ms

■Internal relay contact specifications

Item	Contact rating	Specifications
Operation switch SW1 to SW6	10 mA/24 V DC (resistance load only)	Each contact coordinates the operation switch status of Pressed (close)/Not pressed (open). When the external cable is not connected, contacts are always open regardless of the switch status.
Emergency stop switch ES1 to ES3	1 A/24 V DC (resistance load) 0.3 A/24 V DC (induction load)	Each contact coordinates the emergency stop switch status of Pushed (open)/Return (close). When the external cable is not connected, contacts are always open regardless of the emergency stop switch status.
Grip switch DSW1, DSW2	1 A/24 V DC (resistance load) 0.3 A/24 V DC (induction load)	Each contact coordinates the grip switch status of Pressed (close)/Not pressed (open). When the external cable is not connected, contacts are always open regardless of the grip switch status.
Keylock switch (2-position switch) KSWC, KSW1, KSW2	1 A/24 V DC (resistance load) 0.3 A/24 V DC (induction load)	Each contact coordinates the position of the keylock switch. • When the key is on the left: KSW1 and KSWC are short-circuited. • When the key is on the right: KSW2 and KSWC are short-circuited. When the external cable is not connected, contacts are always open regardless of the keylock switch.

Part name

When the terminal block cover is open

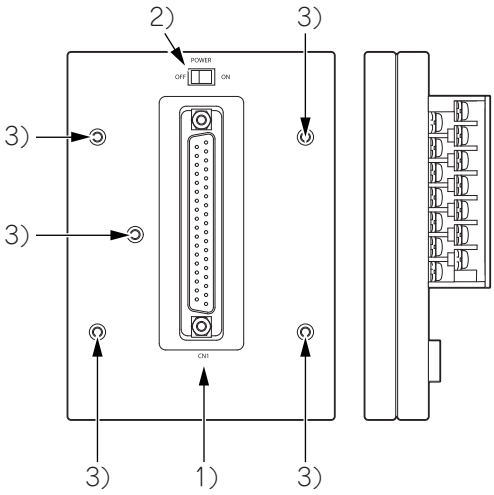

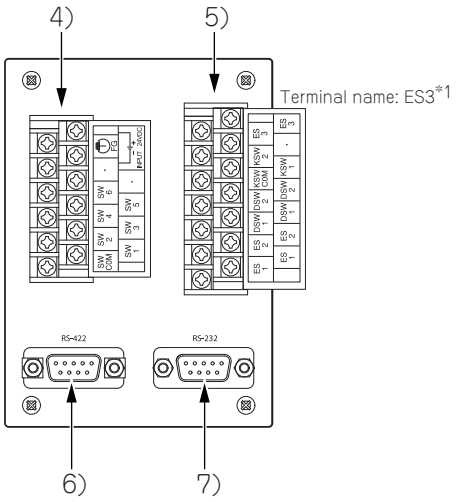

Weight: Approx. 0.17kg (0.4 lb)

No.	Name	Specifications
1)	Connector for Handy GOT (D-sub 37-pin (female))	Connects the Handy GOT through an external cable.
2)	Power switch	Supplies the power to the Handy GOT. When this switch is set to ON, the power is supplied. Turn off the power when attaching or detaching the Handy GOT.
3)	Mounting hole	Used to fix the connector conversion box to a panel directly or to a board with the mounting fixtures. For M3 screw.
4)	Terminal block 1	Connects the GT11H-CNB-37S, the 24 V DC power supply of Handy GOT, and the operation switch (SW1 to 6). With M3 terminal screws and the cover
5)	Terminal block 2	Connects the operation switch of the Handy GOT (SW1 to 6), the grip switch (DSW-1, 2) and the keylock switch (KSW-1, 2). With M3 terminal screws and the cover
6)	Connector for PLC (RS-422: D-sub 9-pin female)	Connects the PLC through a PLC connection cable. RS-422 and RS-232 are not available simultaneously.
7)	Connector for PLC (RS-232: D-sub 9-pin male)	

*1 The cable for the ES-3 signal is provided in the connector conversion box GT11H-CNB-37S regardless of whether the terminal name ES-3 is printed on the box or not.

External dimensions

When the terminal block cover is open

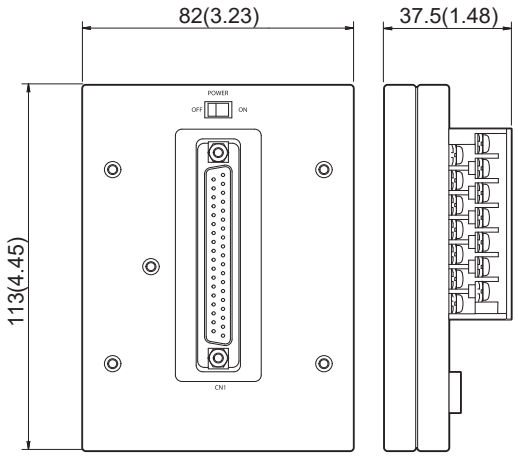

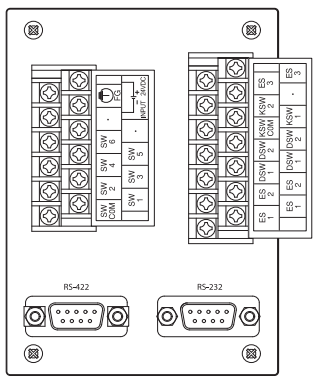

Unit: mm (inch)

Installing a connector conversion box (GT11H-CNB-37S)

Install a connector conversion box on the panel directly or with a mounting bracket.

■Mounting on the panel face (When setting the connector for Handy GOT connection and the power supply switch on the panel surface)

1. Open an installation hole on the control panel with the dimensions shown below.

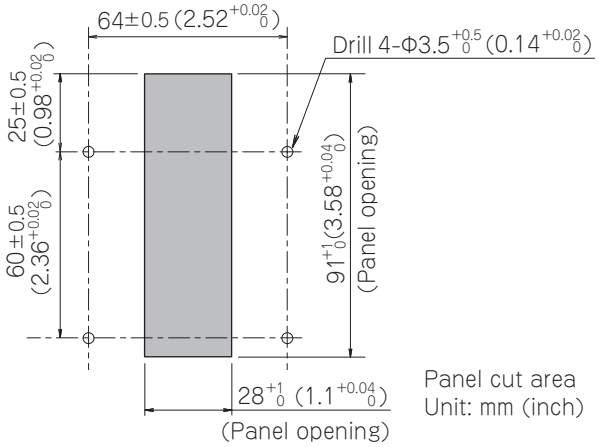

2. Fit the connector conversion box into the installation holes from the back side of the panel, and fix the box with M3 screws (prepared by user).

In the connector conversion box, thread of M3, 6 mm in depth is cut in each mounting hole.

Prepare four M3 mounting screws separately while considering the thickness of the panel face.

Tighten the screws within the specified torque range (0.49 N•m to 0.68 N•m).

Overtightening the screws may cause damage.

To connect a PLC connection cable, make sure that no object is located within 100 mm from the bottom side of the connector.

Keep a space of 25 mm or more on both sides of the connector conversion box.

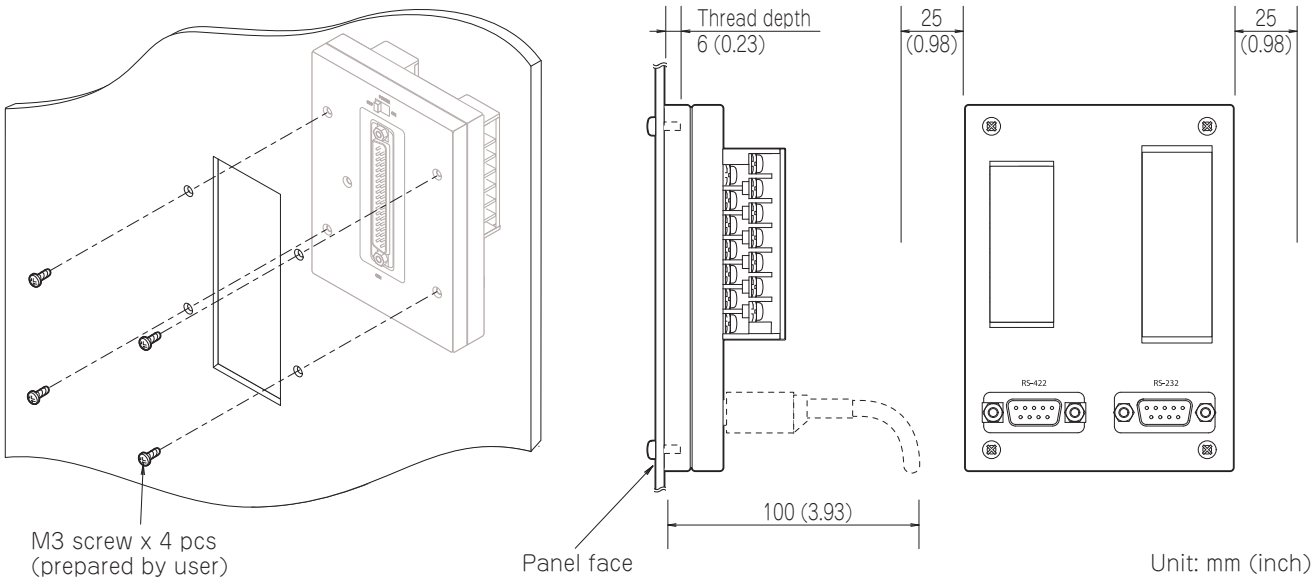

■Installation with the mounting bracket

1. Open installation holes on the panel with the dimensions shown below.

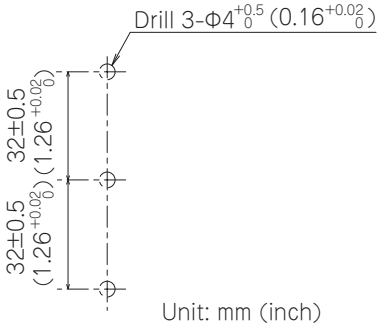

2. Install the supplied mounting bracket on the connector conversion box.

Tighten the screws within the specified torque range (0.49 N•m to 0.68 N•m).

Overtightening the screws may cause damage.

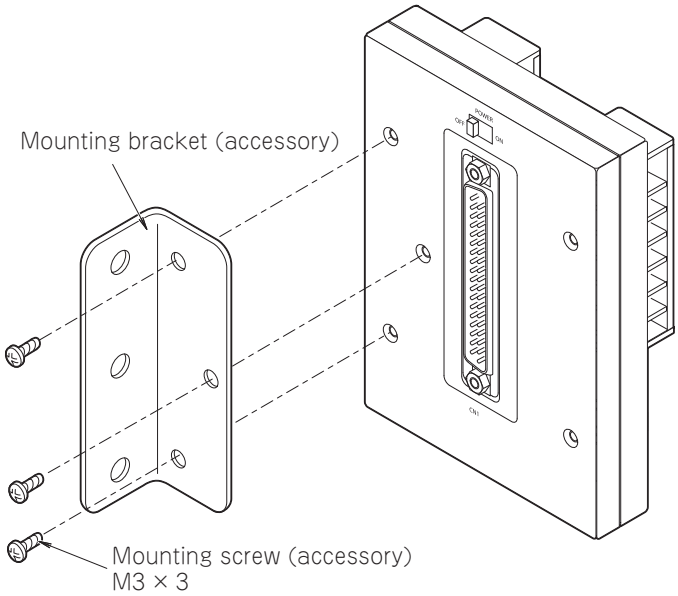

3. Mount the connector conversion box on the control panel.

Overtightening the screws may cause damage.

Tighten the screws within the specified torque range (0.69 N•m to 0.88 N•m).

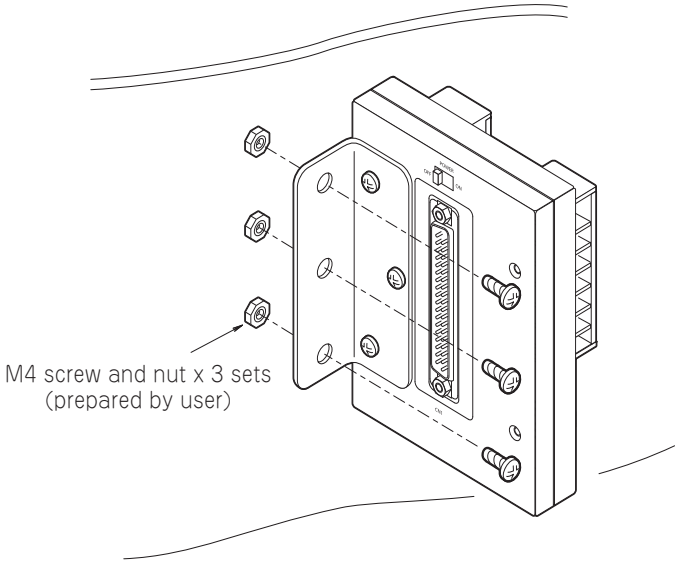

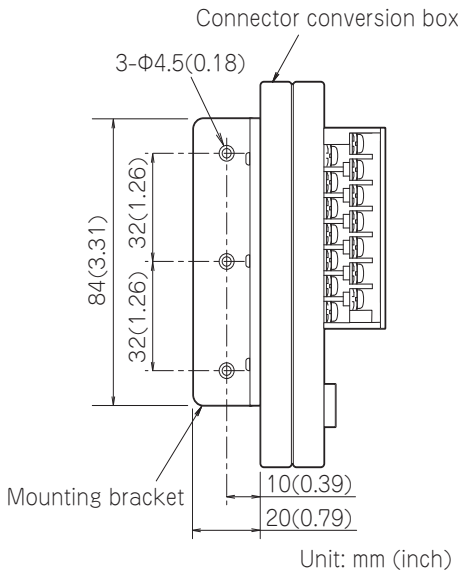

Pin layout and signal names of the connector and terminal blocks

The D-sub 37-pin connector of the external cable is converted to the following terminal blocks and the PLC connection connector (D-sub 9 pins).

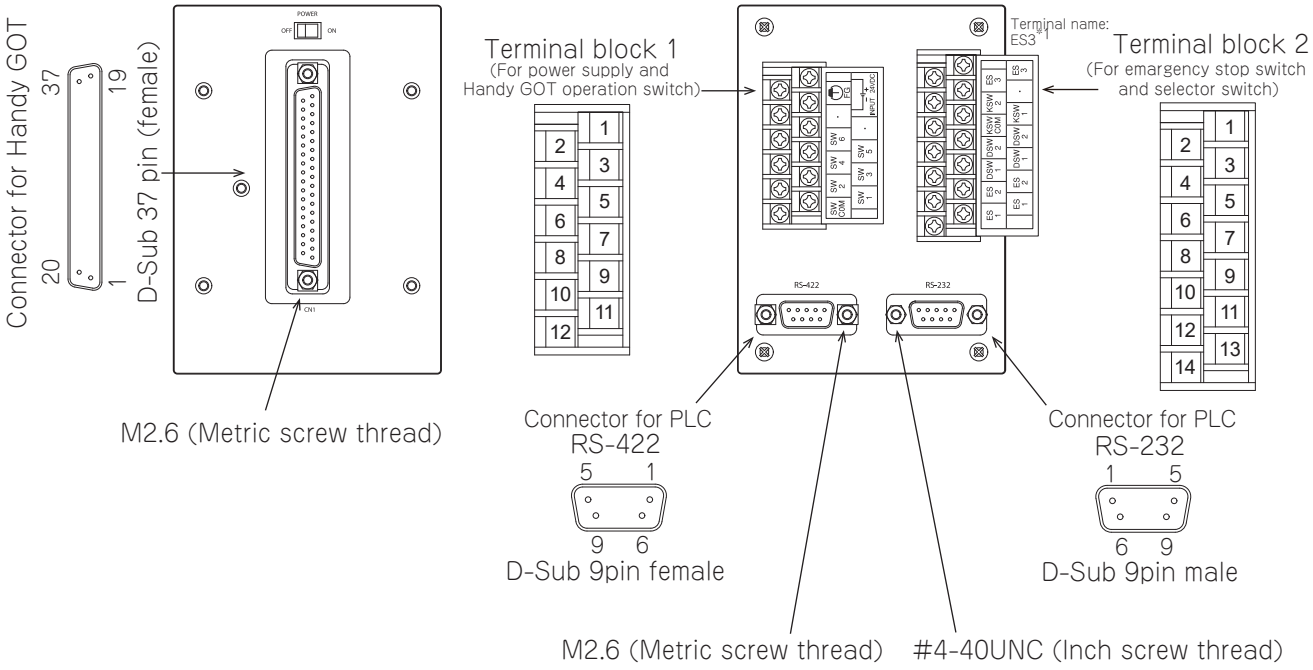

■RS-422 connector (D-sub 9- pin female) for connecting to a PLC

GT11H-C□□-37P		GT11H-CNB-37S	Application
Connector for Handy GOT connection		Connector for PLC RS-422	
D-sub 37-pin	Signal name		
2	TXD+(SDA)	1	Signal line for PLC communication (For wiring, refer to the chapter corresponding to the connected controller.) GOT2000 Series Handy GOT Connection Manual For GT Works3 Version1
6	RXD+(RDA)	2	
4	RTS+(RSA)	3	
8	CTS+(CSA)	4	
10	SG	5	
3	TXD-(SDB)	6	
7	RXD-(RDB)	7	
5	RTS-(RSB)	8	
9	CTS-(CSB)	9	

■RS-232 connector (D-sub 9-pin male) for connecting to a PLC

GT11H-C□□-37P		GT11H-CNB-37S	Application
Connector for Handy GOT connection		Connector for PLC RS-232	
D-sub 37-pin	Signal name		
—	N.C	1	Signal line for PLC communication (For wiring, refer to the chapter corresponding to the connected controller.) GOT2000 Series Handy GOT Connection Manual For GT Works3 Version1
4	RXD(RD)	2	
2	TXD(SD)	3	
3	DTR(ER)	4	
10	SG	5	
5	DSR(DR)	6	
6	RTS(RS)	7	
7	CTS(CS)	8	
—	N.C	9	

■Terminal block 1, 2

GT11H-C□□-37P *2		GT11H-CNB-37S		Application
Connector for Handy GOT connection		Terminal block		
D-sub 37-pin	Signal name			
36, 37	DC24V+	Terminal block 1	1	24 V DC power supply "+"
1	FG		2	Frame ground
18, 19	DC24V-		3	24 V DC power supply "-"
—	N.C		4	Not used
—	N.C		5	
34	SW6		6	For Operation switch
33	SW5		7	
16	SW4		8	
15	SW3		9	
14	SW2		10	
13	SW1		11	
12	SW-COM		12	
31	ES3 *3	Terminal block 2	1	For Emergency stop switch
32	ES3 *3		2	
—	N.C		3	Not used
30	KSW-2		4	For Keylock switch
29	KSW-1		5	
28	KSW-C		6	
27	DSW-2		7	For Grip switch
26	DSW-2		8	
25	DSW-1		9	
24	DSW-1		10	
23	ES2		11	For Emergency stop switch
22	ES2		12	
21	ES1		13	
20	ES1		14	

*1 The cable for the ES-3 signal is provided in the connector conversion box GT11H-CNB-37S regardless of whether the terminal name ES-3 is printed on the box or not.

*2 Use C or later version of GT11H-C □ □ -37P.

*3 ES-3 is not provided for B or earlier version of GT11H-C □ □ -37P.

7.2 Emergency Stop Switch Guard Cover

The emergency stop switch guard cover is attached to prevent the emergency stop SW from being operated incorrectly.

Applicable emergency stop switch guard cover

The following emergency stop switch guard cover is applicable for the Handy GOT.

○: Usable, -: Not usable

Product name	Model name	Contents	GT2506HS-V	GT2505HS-V
Emergency stop switch guard cover	GT16H-60ESCOV	Mounting screw (M3 × 6) ×1 (accessory)	○	—
	GT14H-50ESCOV		—	○

Installing procedure

1. Remove the Handy GOT from the device or turn the entire system power off.

Make sure that operating the emergency stop switch of the Handy GOT does not affect the system during the installation of the emergency stop switch guard cover.

2. Align the installation hole of the emergency stop switch guard cover with the relevant installation hole on the Handy GOT.

Tighten the supplied screw (M3×6) within the specified torque range (0.36 N•m to 0.48 N•m) to fix the cover.

Too much tightening may cause damage.

Example) GT2506HS-V

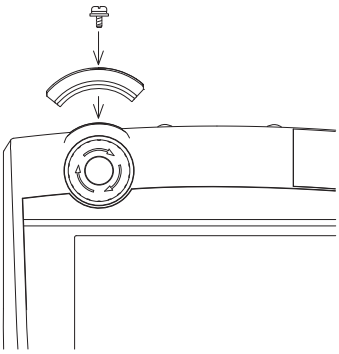

7.3 Wall-mounting Attachment

The wall-mounting attachment is available to fix the handy GOT on the wall, stand or panel.

Applicable wall-mounting attachment

The following wall-mounting attachment is applicable for Handy GOT.

○: Usable, -: Not usable

Product name	Model	Contents	GT2506HS-V	GT2505HS-V
Wall-mounting attachment	GT14H-50ATT	Mounting screw (M4-14), Nut (M4)	—	○

Mounting

Attaching the wall-mounting attachment on the panel surface

■Processing the panel surface (wall surface or stand surface)

Open an installation hole on the control panel with the dimensions shown below.

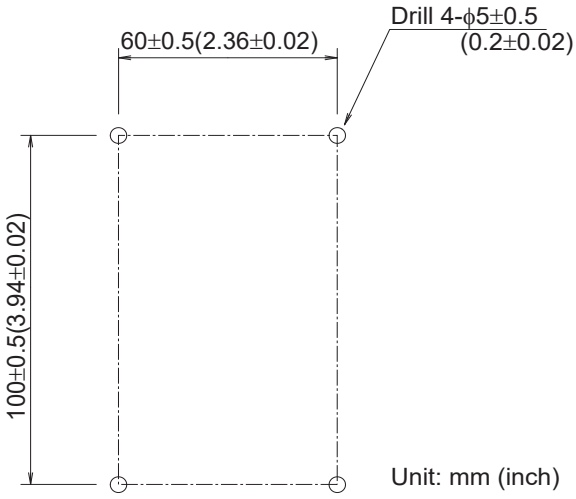

■Attaching the wall-mounting attachment on the panel surface

Fit the wall-mounting attachment on the panel front face, and fix it with M4 screws and nuts (which are packed together).

Holes of Φ4.5 are drilled for mounting the wall-mounting attachment

Tighten the screws within the specified torque range (0.69 N•m to 0.88 N•m).

Overtightening the screws may cause damage.

Make sure that interfering objects are not present in the downward direction so that connection of the external connection cable will not be hindered.

When opening and closing the environment-resistant interface cover (for using the USB/SD card connector located inside the cover) while the handy GOT is attached, make sure that interfering objects are not present in the upward direction.

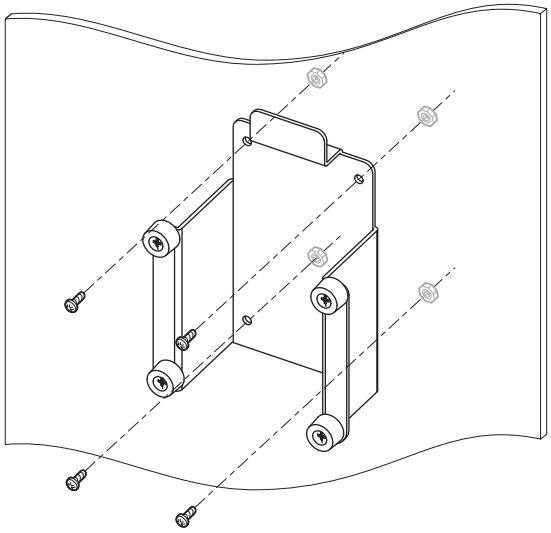

Attachment of handy GOT

The figure shows an image of attaching the handy GOT to the wall-hanging fixture.

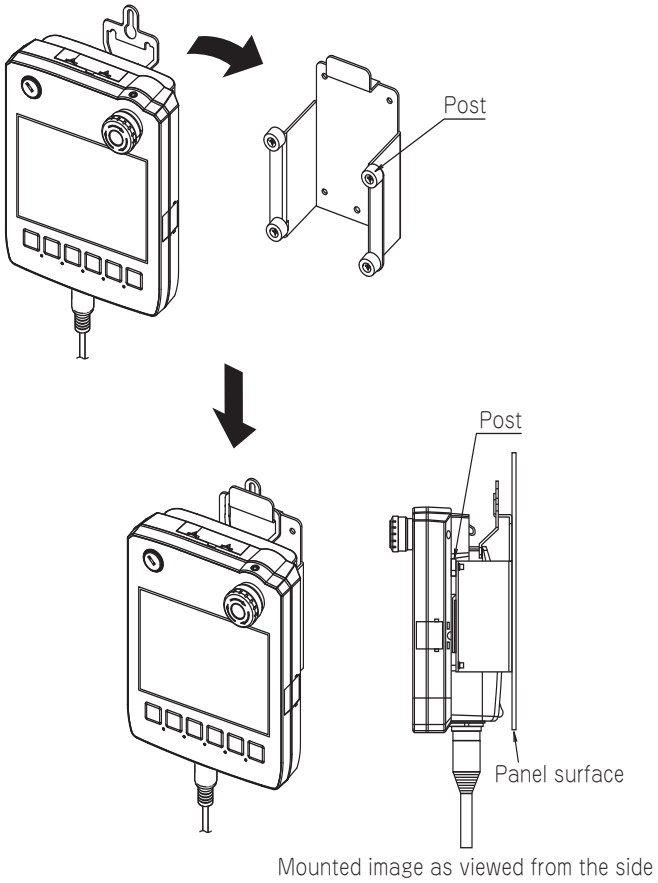

Mounted image as viewed from the side

7.4 Overview of Communication Cable

The following communication cables are available.

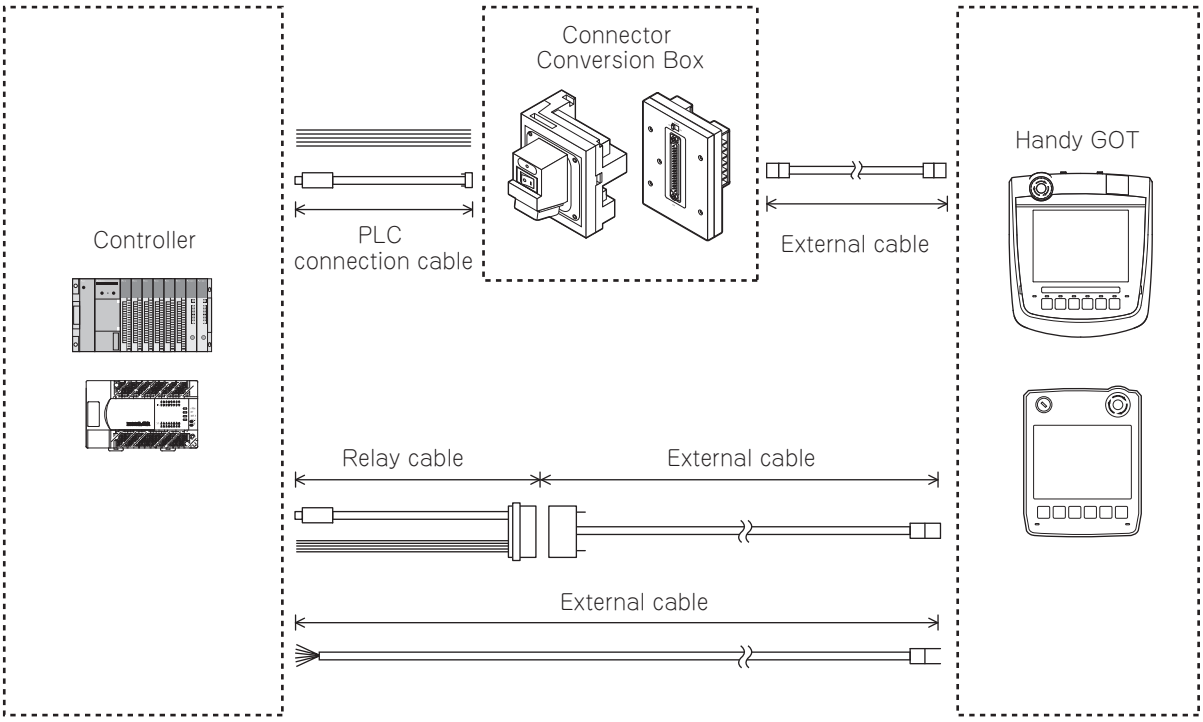

External cable: This cable connects Handy GOT and a connector conversion box.

To use the external cables which include unfastened cables on one side (GT11H-C □ □), process the cables according to the application.

This cable must be prepared to use the Handy GOT.

PLC connection cable: A cable which connects a connector conversion box and a controller.

There are several types which can be selected according to a controller.

However, this cable must be prepared by the user depending on the controller to be used.

○: Usable, -: Not usable.

Name	Model	Length	GT2506HS-V	GT2505HS-V	Remark
External cable	GT16H-C30-42P	3 m	○	—	For connection to the 42-pin connector conversion box
	GT16H-C60-42P	6 m	○	—	
	GT16H-C100-42P	10 m	○	—	
	GT14H-C30-42P	3 m	—	○	
	GT14H-C60-42P	6 m	—	○	
	GT14H-C100-42P	10 m	—	○	
	GT16H-C30-37PE	3 m	○	—	For connection to the 37-pin connector conversion box
	GT16H-C60-37PE	6 m	○	—	
	GT16H-C100-37PE	10 m	○	—	
	GT11H-C30-37P *1	3 m	—	○	For connection to the 37-pin connector conversion box For connecting to a PLC cable (37 pins)
	GT11H-C60-37P *1	6 m	—	○	
	GT11H-C100-37P *1	10 m	—	○	
	GT11H-C30 *1	3 m	—	○	For connection to the unfastened relay cable
	GT11H-C60 *1	6 m	—	○	
	GT11H-C100 *1	10 m	—	○	
Relay cable (for connecting the external cable and a PLC)	GT11H-C15R4-8P *1	1.5 m	—	○	For connecting the FXCPU (MINI-DIN 8 pins at the PLC end)
	GT11H-C15R4-25P *1	1.5 m	—	○	For connecting an A/QnACPU, FX1, FX2, or FX2C PLC (D-sub 25-pin at the PLC end)
	GT11H-C15R2-6P *1	1.5 m	—	○	For connecting a QCPU (MINI-DIN 6 pins at the PLC end)
PLC connection cable (for connecting between PLCs and connector conversion box)	Select or prepare appropriate cables for the communication method and controllers. For the details, refer to the following. GOT2000 Series Handy GOT Connection Manual For GT Works3 Version1				

*1 Use C or later version.

Selection of RS-232 connection and RS-422/485 connection (GT2506HS-V)

GT2506HS-V can be connected to a controller using the RS-232 or RS-422/485 connection.

Point

For GT2506HS-V, the RS-232 or RS-422/485 connection can be used with the Ethernet connection.

To select the RS-232 or RS-422/485 connection, connect the cable connector for PLC communication in the environmental protection back cover to the connector of either connections.

- For the RS-232 connection, connect the cable connector for PLC communication to RS-232 connector.
- For the RS-422/485 connection, connect the cable connector for PLC communication to RS-422/485 connector.

The cable connector for PLC communication is connected to the RS-422/485 connector at factory shipment.

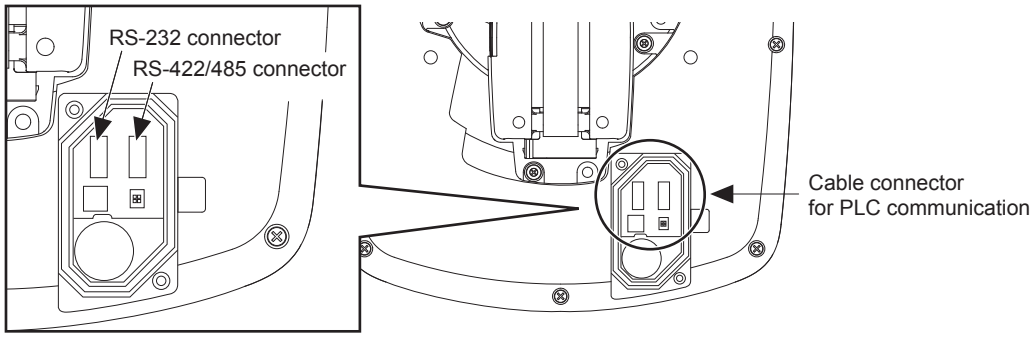

The selected connection method (RS-232 connection or RS-422 connection) is applied when the Handy GOT power is turned on.

The connector can be checked through the window when the environmental protection back cover is closed.

It can be used as a method to check the connection type from the outside of Handy GOT.

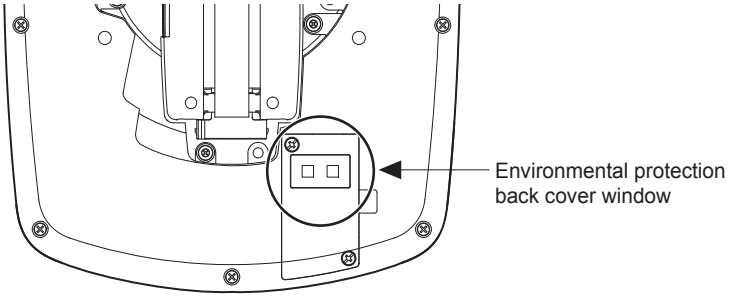

Point

An external cable can be used for both connections.

■Precautions for switching between the RS-232 connection and the RS-422/485 connection

Before connecting or disconnecting the cable connector for PLC communication, make sure to turn off the Handy GOT.

Not doing so may cause a failure.

Selection of the RS-232 connection, RS-422 connection, or Ethernet connection

GT2505HS-V can be connected to a controller using the RS-232, RS-422, or Ethernet connection.
Select the RS-232 connection, RS-422 connection, or Ethernet connection by using the cable connector for the PLC communication in the environmental protection back cover.

- For the RS-232 connection, connect the cable connector for PLC communication to RS-232 connector.
- For the RS-422 connection, connect the PLC communication cable connector with the RS-422 connector.
- For the Ethernet connection, connect the PLC communication cable connector with the Ethernet connector.

The Ethernet connection is selected at factory shipment.

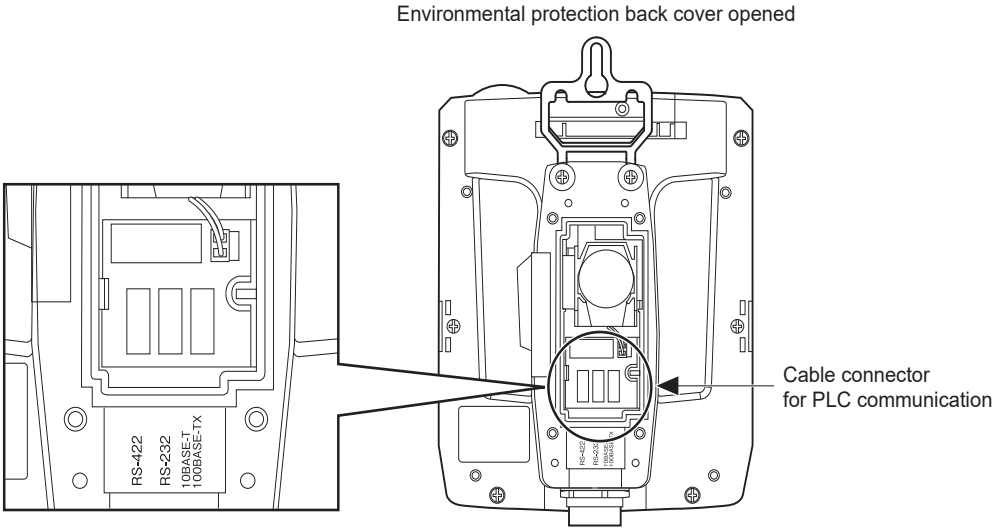

The selected connection method (RS-232 connection or RS-422 connection) at the Ethernet connection is applied when the Handy GOT power is turned on.
The connector can be checked through the window when the environmental protection back cover is closed.
It can be used as a method to check the connection type from the outside of Handy GOT.

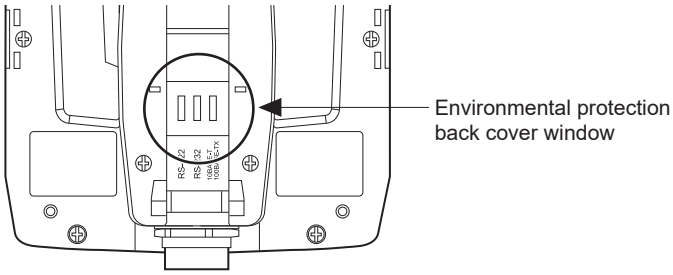

Point

The available connection type differs depending on the external cable to be used.

- GT14H-C□□-42P: Ethernet connection
- GT11H-C□□-37P: RS-232, RS-422, and Ethernet connection
- GT11H-C□□: RS-232 connection and RS-422 connection

■Precautions for switching among the RS-232, RS-422, and Ethernet connections

Before connecting or disconnecting the cable connector for PLC communication, make sure to turn off the Handy GOT.
Not doing so may cause a failure.

7.5 External Cable, Relay Cable

Pin layout and signal names of the external cable

GT11H-C□□□-37P

(Use C or later version.)

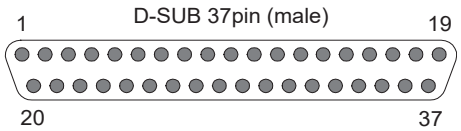

(From the engagement face)

Layout and color-coding for the core wires of GT11H-C□□□

(Use C or later version.)

Untied wire (31-core type)

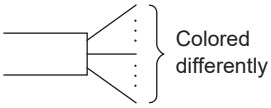

Arrangement of color (color type)

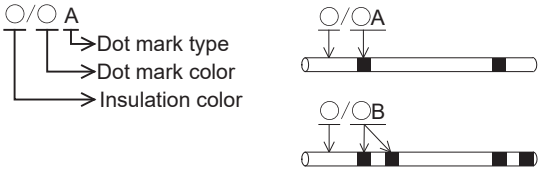

Cross section of the cable

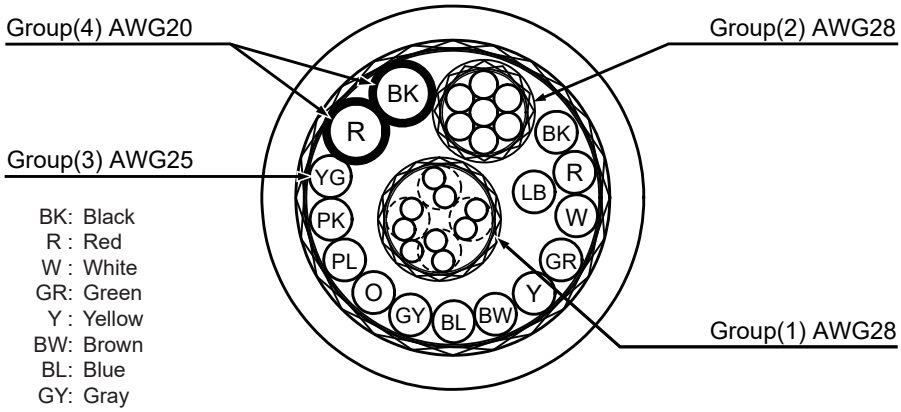

BK: Black
R : Red
W : White
GR: Green
Y : Yellow
BW: Brown
BL: Blue
GY: Gray
O : Orange
PL: Purple
PK: Pink
YG: Yellow green
LB: Light blue

Signal names of GT11H-C□□□-37P and GT11H-C□□□

External cable				Communication, power, operation switch signal name		Application
GT11H-C□□□-37P	GT11H-C□□□			RS-422	RS-232C	
D-sub pin No.	Core wire	Wire diameter	Wire color (color type)			
1	Shield			FG (Shield)		Frame ground
2	Core wire 1)	AWG28 For Emergency stop switch	W/R (A)	TXD+(SDA)	TXD(SD)	Signal line for PLC communication
3			W/BK (A)	TXD-(SDB)	DTR(ER)	
4			GY/R (A)	RTS+(RSA)	RXD(RD)	
5			GY/BK (A)	RTS-(RSB)	DSR(DR)	
6			O/R (A)	RXD+(RDA)	RTS(RS)	
7			O/BK (A)	RXD-(RDB)	CTS(CS)	
8			Y/R (A)	CTS+(CSA)	N.C.	
9			Y/BK (A)	CTS-(CSB)	N.C.	
10		AWG28	PK/R (A)	SG		Signal ground
11	—			N.C.		Not used
12	Core wire 2)	AWG28	W/R (B)	SW-COM (common)		For Operation switch
13			W/BK (B)	SW1		
14			GY/R (B)	SW2		
15			GY/BK (B)	SW3		
16			PK/BK (A)	SW4		
17	—			N.C.		Not used
18	Core wire 4)	AWG20	Black	DC24G		24 V DC power supply "-"
19	Transition wiring with 18	—	—	DC24G		
20	Core wire 3)	AWG25	Purple	ES1		For Emergency stop switch
21			Orange	ES1		
22			Gray	ES2		
23			Blue	ES2		
24			Brown	DSW-1		For Grip switch
25			Yellow	DSW-1		
26			Green	DSW-2		
27			Red	DSW-2		
28			White	KSW-C (common)		For Keylock switch
29			Black	KSW-1		
30			Light blue	KSW-2		
31			Yellow green	ES3 *1		For emergency stop switch
32			Pink	ES3 *1		
33	Core wire 2)	AWG28	O/R (B)	SW5		For Operation switch
34			O/BK (B)	SW6		
35	—			N.C.		Not used
36	Core wire 4)	AWG20	Red	DC24V+		24 V DC power supply "+"
37	Transition wiring with 36	—	—	DC24V+		

*1 ES3 is not provided for version B or earlier of GT11H-C□□□-37P and GT11H-C□□□.

Pin layout of the relay cable

GT11H-C15R4-8P relay cable

(Use C or later version.)

This cable is usable for connecting the following controllers.

FX0 series

FX0S series

FX0N series

FX1S series

FX1N(C) series

FX2N(C) series

FX3G(C) series

FX3U(C) series

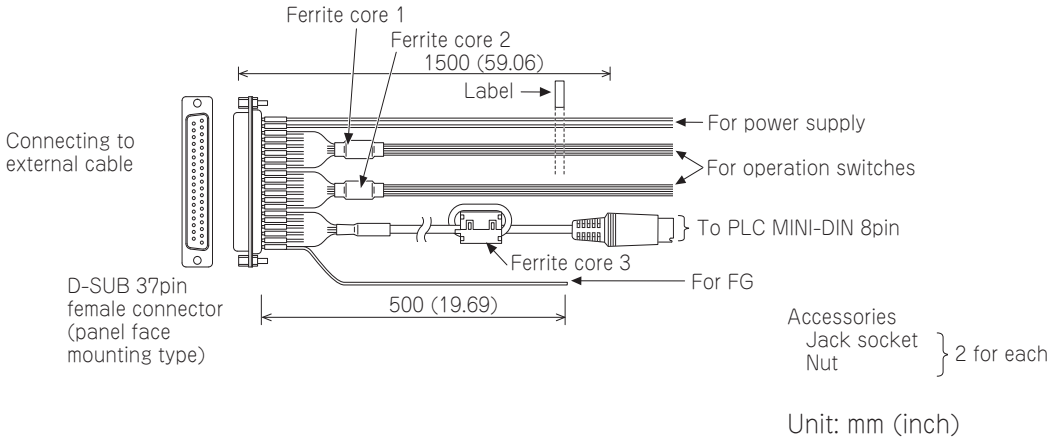

Unit: mm (inch)

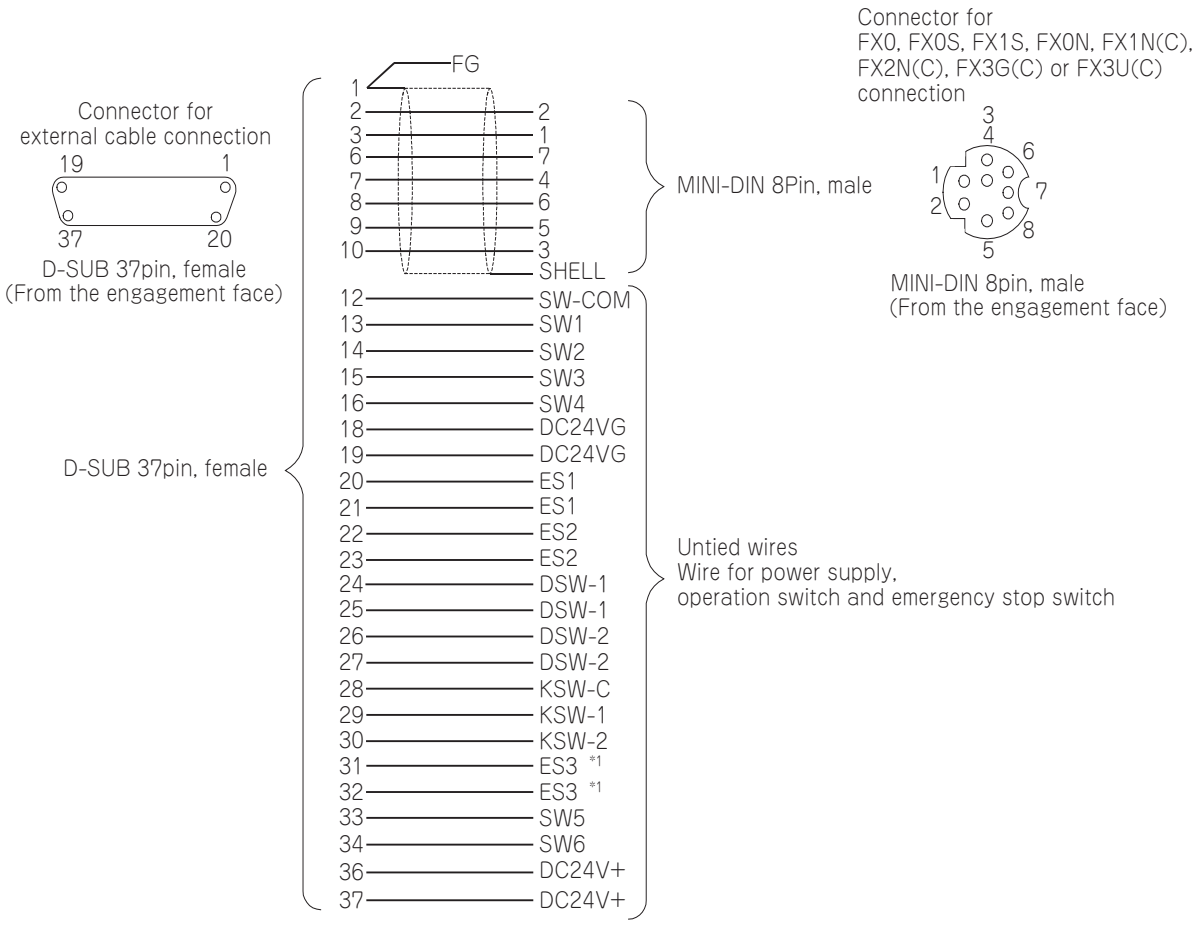

*1 ES-3 is not provided for B or earlier version of the cables.

GT11H-C15R4-25P relay cable

Use C or later version.

This cable is usable for connecting the following controllers.

ACPU

QnACPU

FX1 series

FX2 series

FX2C series

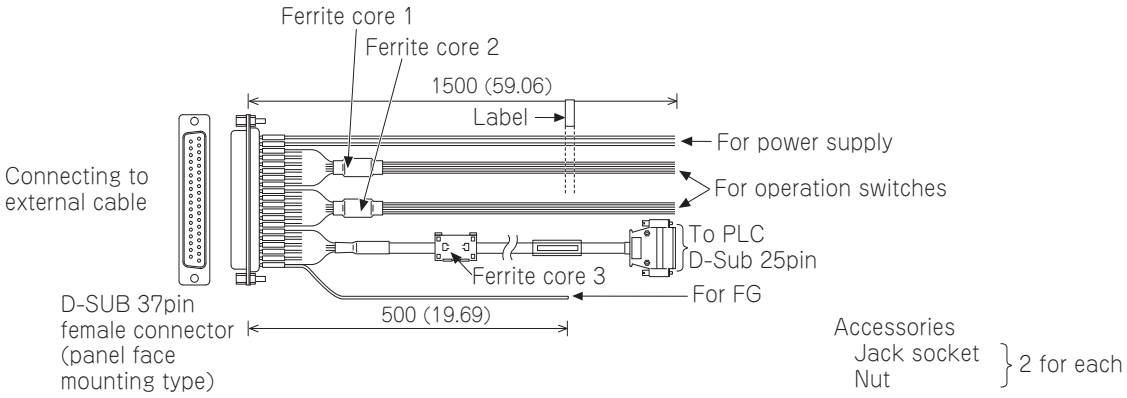

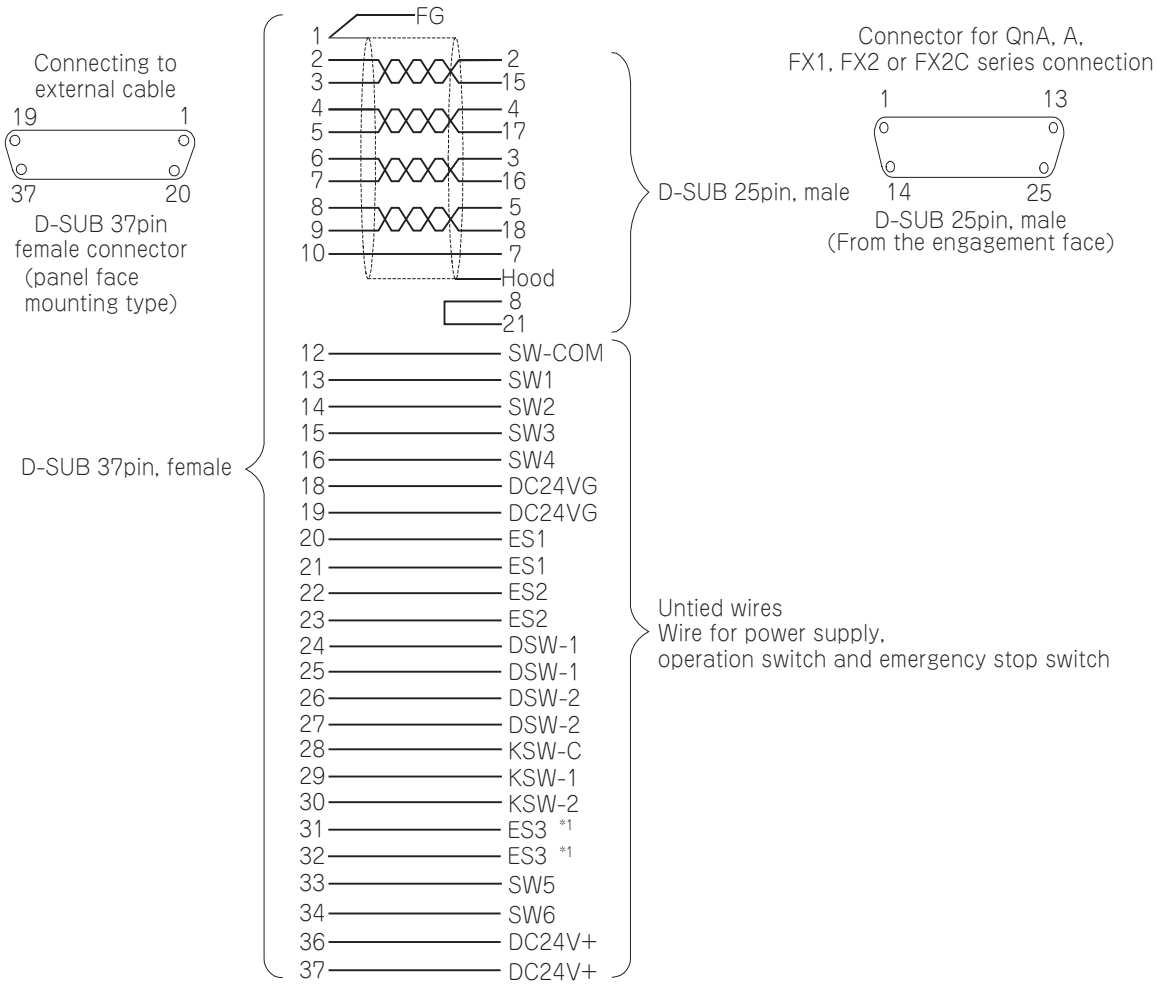

*1 ES-3 is not provided for B or earlier version of the cables.

GT11H-C15R2-6P relay cable

(Use C or later version.)

The cable is usable for connecting a QCPU.

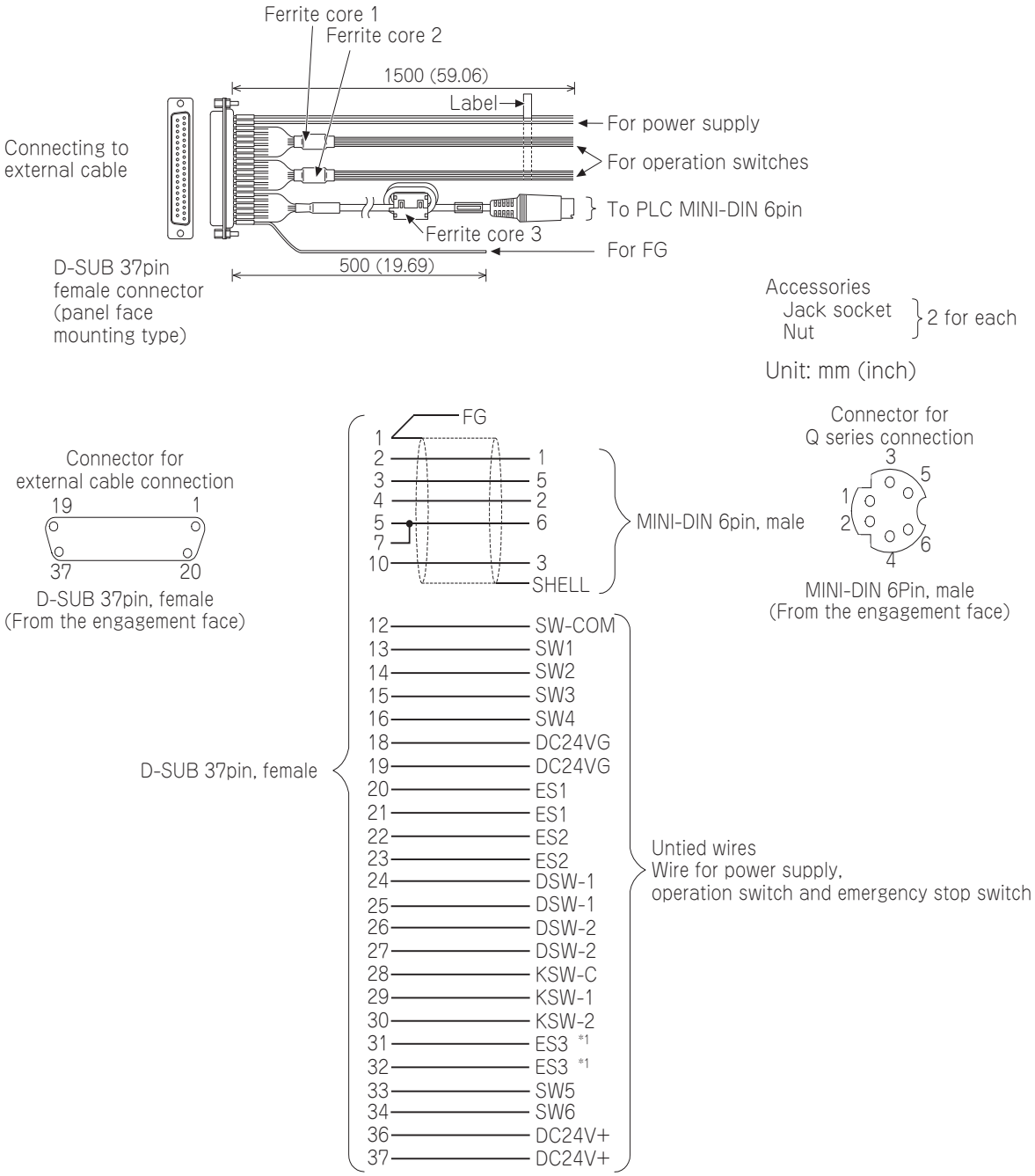

*1 ES-3 is not provided for B or earlier version of the cables.

Connector specifications

Connector for GT11H-C □ □ □ -37P

The following connector or equivalent connector is used to connect the relay cable for the external cable (GT11H-C □ □ □ -37P).

For the connector to be connected to GT11H-C □ □ □ -37P and its cover, use products applicable to the GT11HC.

Connector model	Connector type	Manufacturer
17JE-23370-02(D8A2)-CG	D-sub 37-pin (male) M2.6 metric screw thread	DDK Ltd.

Controller side connector

Use the connector compatible with the controller.

For details, refer to the manual of the controller to be used.

Installing and removing of external cable

Installation procedure of external cable (GT2506HS-V)

1. Make sure that the GOT power is off.

2. Insert the connector adjusting the triangle marks of the main unit side connector and cable side connector.

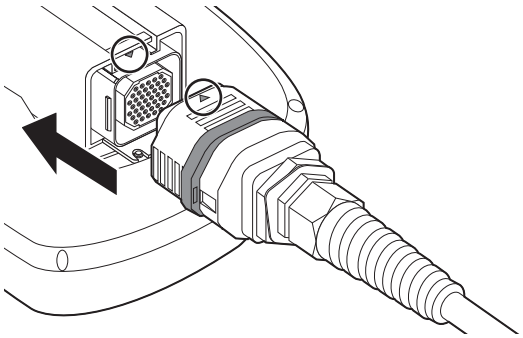

3. After inserting the connector, push the lock lever.

The connectors are locked after the lever is pushed into.

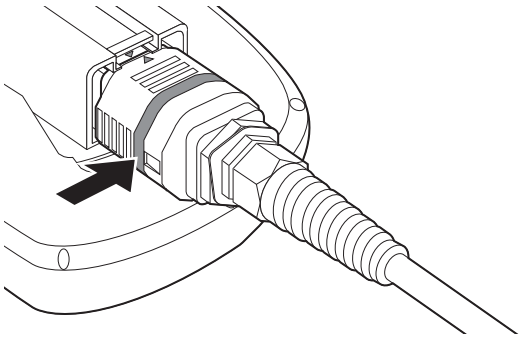

Removal procedure of the external cable (GT2506HS-V)

1. Make sure that the GOT power is off.
2. Pull up the lock lever with inserting a flat-blade screwdriver into the release hole of the lock lever.

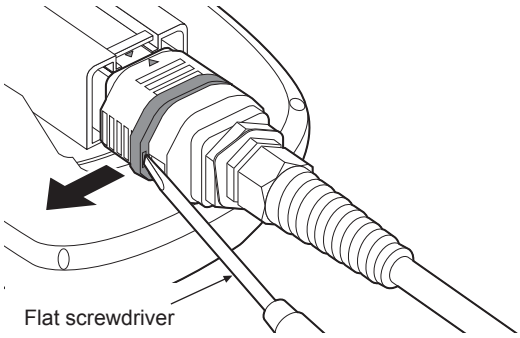

3. Hold the coupling and pull the connector toward the cable side to remove the cable.

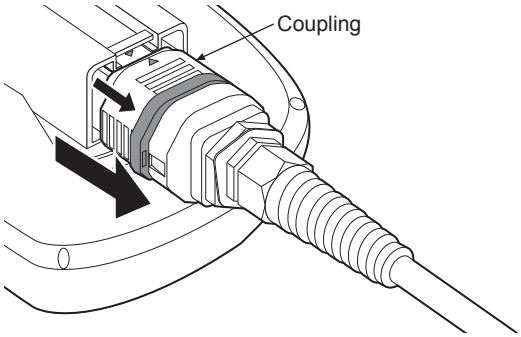

Installation procedure of external cable (GT2505HS-V)

1. Make sure that the GOT power is off.
2. Insert the connector adjusting the triangle marks of the main unit side connector and cable side connector.

(The connectors are locked after the lever is inserted.)



Removal procedure (GT2505HS-V)

1. Make sure that the GOT power is off.
2. Pull out the cable while turning the triangle mark side of the cable side connector to the left.

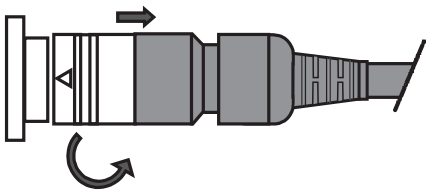

Installation procedure of external cable (GT16H-CNB-42S)

1. Make sure that the GOT power is off.
2. Insert the connector adjusting the triangle marks of the main unit side connector and cable side connector.

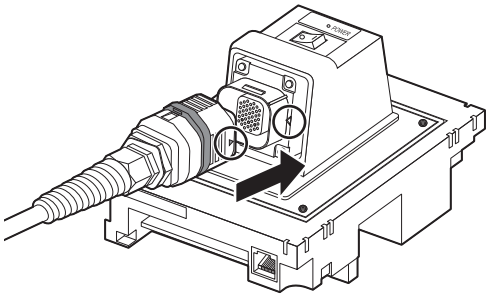

3. After inserting the connector, push the lock lever. The connectors are locked after the lever is pushed into.

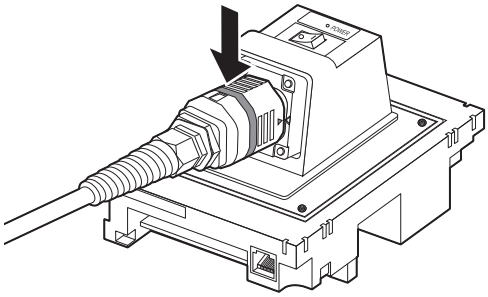

Removal procedure (GT16H-CNB-42S)

1. Make sure that the GOT power is off.
2. Pull up the lock lever with inserting a flat-blade screwdriver into the release hole of the lock lever.

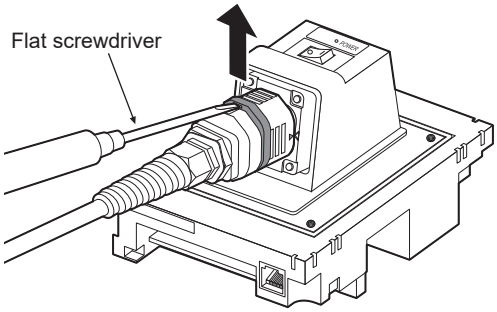

3. Hold the coupling and pull the connector toward the cable side to remove the cable.

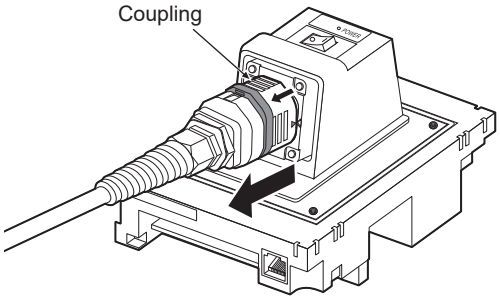

MEMO

8 WIRING OF POWER SUPPLY SECTION

- Page 325 Wiring of External Power Supply
- Page 326 Power Supply Wiring to the GOT
- Page 328 Grounding
- Page 332 Wiring Inside and Outside the Control Panel
- Page 333 Attaching a Surge Suppressor to Control Equipment
- Page 334 Grounding the Extension Unit

⚠WARNING

- Be sure to shut off all phases of the external power supply used by the system before wiring.
  Failure to do so may result in an electric shock, product damage or malfunctions.
- When grounding the FG terminal and LG terminal of the GOT power supply section, note the following points.
  Not doing so may cause an electric shock or malfunction.
  • GT27, GT25, GT23, GT2107-W, GT2105-Q
  Make sure to ground the FG terminal and LG terminal of the GOT power supply section solely for the GOT (ground resistance: 100 Ω or less, ground cable diameter: 1.6 mm or more). (GT2705-V, GT25-W, GT2505-V, GT2107-W, and GT2105-Q do not have the LG terminal.)
  • GT2104-R, GT2104-P, GT2103-P
  Make sure to ground the FG terminal of the GOT power supply section with a ground resistance of 100 Ω or less. (For GT2104-PMBLS and GT2103-PMBLS, grounding is unnecessary.)
- Correctly wire the GOT power supply section after confirming the rated voltage and terminal arrangement of the product.
  Not doing so can cause a fire or failure.
- Tighten the terminal screws of the GOT power supply section in the specified torque range.
  Undertightening can cause a short circuit or malfunction.
  Overtightening can cause a short circuit or malfunction due to the damage of the screws or the GOT.
- Exercise care to avoid foreign matter such as chips and wire offcuts entering the GOT.
  Not doing so can cause a fire, failure or malfunction.

⚠CAUTION

- Plug the communication cable into the connector to be connected, and tighten the mounting screws and the terminal screws in the specified torque range.
  Undertightening can cause a short circuit or malfunction.
  Overtightening can cause a short circuit or malfunction due to the damage of the screws or unit.

This section describes wiring to the GOT power supply section.

For the connection to a controller, refer to the following manual.

📖GOT2000 Series Connection Manual For GT Works3 Version1 that covers the controller used

For external dimensions of connection cable, refer to the following.

☞ Page 389 APPENDICES

Point

General preventive measures against noise

There are two kinds of noises: Radiated noise that is transmitted into the air and Conductive noise that is directly transmitted along connected lines. Countermeasures must be taken considering both kinds of noises and referring to the following 3 points.

• Protecting against noise

(a) Keep signal lines away from noise sources such as a power cable or a high-power drive circuit.

(b) Shield the signal lines.

• Reducing generated noise

(a) Use a noise filter, etc. to reduce the level of the noise generated due to a source such as a high-power motor drive circuit.

(b) Attach a surge suppressor on the terminal of the molded case circuit breaker (MCCB), electromagnetic contactor, relay, solenoid valve, or induction motor to suppress the noise.

• Releasing noise to the ground

(a) Make sure to connect the ground cable to the ground.

(b) Use a short and thick cable to lower its ground resistance.

(c) Ground the power system and the control system separately.

8.1 Wiring of External Power Supply

Separating the power supply system

Carry out wiring so that the power supply system is separated into the GOT, I/O equipment, and power equipment as shown below.

When frequent noise is identified, connect an isolation transformer.

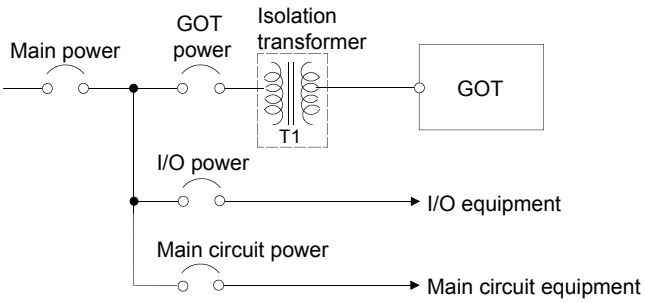

Separating the power cables from the main circuit line and the I/O signal line

Separate the 100 V AC, 200 V AC, and 24 V DC cables from the main circuit lines (high voltage, large current) and I/O signal lines.

Keep a distance of 100 mm or more between them as a guide.

Treatment on power cables

Twist 100 V AC, 200 V AC, and 24 V DC cables as closely as possible, and connect the cables with the minimum length between the power supply and each device.

■For GT27, GT25, GT23, GT2107-W, and GT2105-Q

Use a thick wire (cross-sectional area: about 0.75 mm^2 to 2 mm^2) for less voltage drop.

Use the solderless terminal for M3, and tighten the terminal firmly with a torque of 0.5 N•m to 0.8 N•m.

■For GT2104-R, GT2104-P, and GT2103-P

Connect a stranded or solid wire directly, or use the rod terminal with an insulation sleeve.

Tighten the terminal firmly with a torque of 0.22 N•m to 0.25 N•m.

Connecting the lightning surge absorber

As measures against surge due to lightning, connect a lightning surge absorber as shown below.

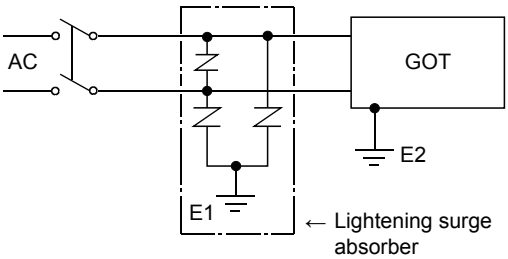

Separate the grounding of the lightning surge absorber (E1) from the grounding of the GOT (E2).

Select an appropriate lightning surge absorber that has the maximum allowable circuit voltage withstanding the maximum power supply voltage.

8.2 Power Supply Wiring to the GOT

The following shows the examples of wiring the power cable, ground cable and other cables to the GOT power supply terminal.

GT27, GT25, GT23

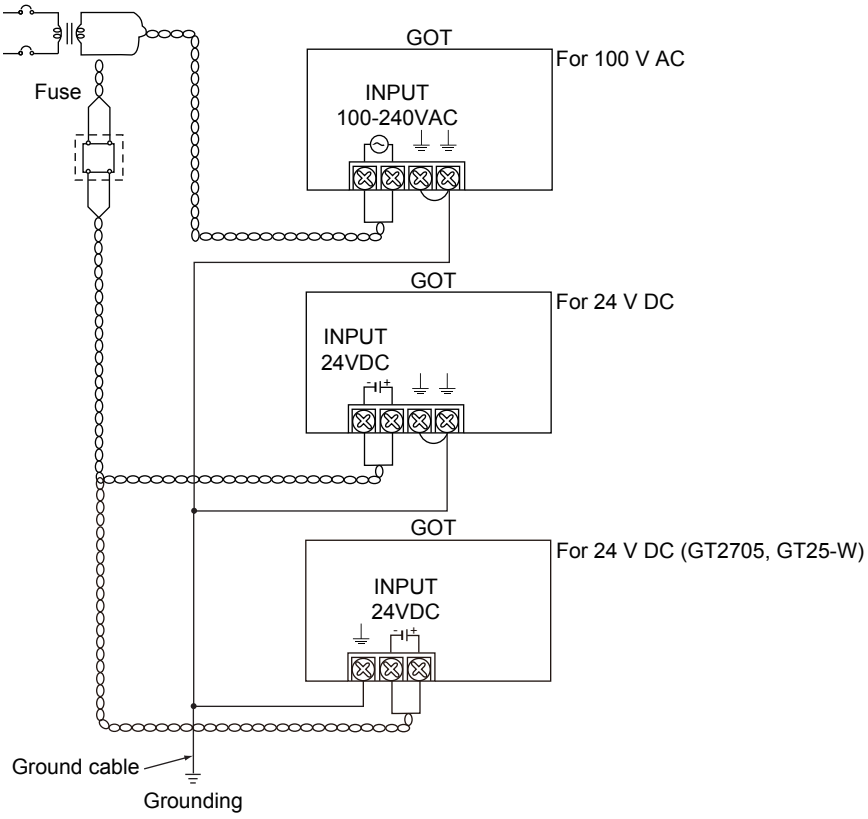

For GT2107-W, GT2105

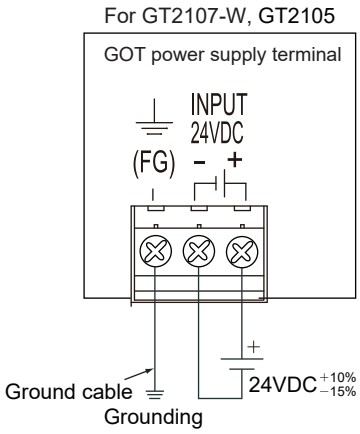

For GT2104, GT2103

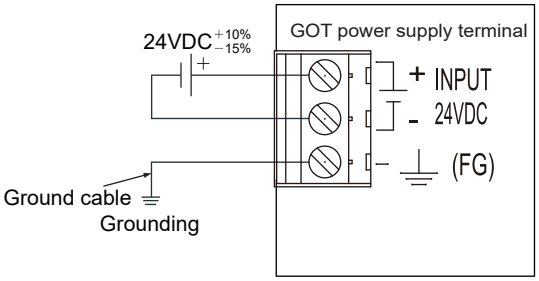

Precautions (GT27, GT25, GT23, GT2107-W, GT2105)

■Treatment on power cables

For 100 V AC, 200 V AC, and 24 V DC cables, use thick wires as much as possible (Cable cross section: 0.75 mm^2 to 2 mm^2), and make sure to twist them to the terminals.

To prevent a short circuit due to loose screws, use a solderless terminal with an insulation sleeve.

■Grounding

After connecting the LG terminal and the FG terminal, make sure to connect them to the ground.

Otherwise, the system is susceptible to noise.

The LG terminal has a potential equal to a half of the input voltage.

Therefore, touching the terminal may lead to an electric shock.

For GT2705-V, GT25-W, GT2505-V, GT2107-W, and GT2105, ground only the FG terminal because the models do not have the LG terminal.

Precautions (GT2104-R, GT2104-P, GT2103-P)

■Terminal processing of power cables

Connect a stranded wire or a solid wire directly, or use a rod terminal with an insulation sleeve.

Do not tighten the terminal screws in the specified torque range or more. Doing so can cause a failure or malfunction.

• When connecting a stranded wire or a solid wire directly

Twist the end of the stranded wire to prevent the elemental wires from protruding.

Do not apply a solder plating to the end of the wire.

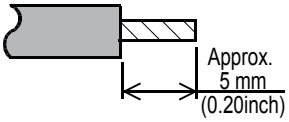

• When using a rod terminal with an insulation sleeve

A wire with a thick sheath cannot enter the insulation sleeve smoothly. Select a wire referring to the figure of external dimensions below.

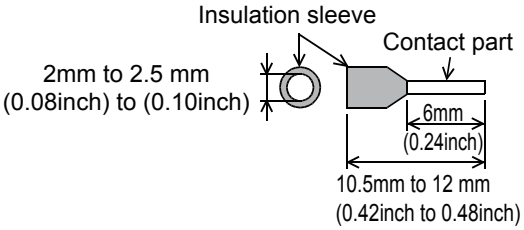

Manufacturer	Swage
PHOENIX CONTACT	CRIMPFOX 6

■Tool

Tighten the power supply terminal using a commercially-available small screwdriver. The tip of the screwdriver must be straight and as wide as the shaft, as shown in the figure below.

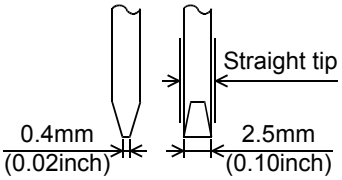

Manufacturer	Model
PHOENIX CONTACT	SZS 0.4 × 2.5

■Grounding

Make sure to ground the FG terminal.

Otherwise, the system is susceptible to noise.

8.3 Grounding

Each GOT has the following ground terminals.
GT27 (except GT2705-V), GT25 (except GT25-W and GT2505-V), GT23: FG terminal and LG terminal
GT2705-V, GT25-W, GT2505-V, GT21: FG terminal

Grounding the GOT

Grounding method

Ground the GOT as shown below.

■For GT27, GT25, GT23, GT2107-W, and GT2105-Q

Ground the GOT independently as much as possible. The ground resistance must be 100 Ω or less.
When independent grounding cannot be applied for the GOT, use shared grounding as shown in (2) below.

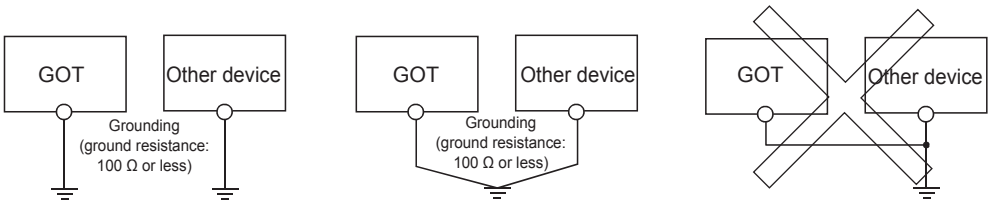

(1) Independent grounding····· Best (2) Shared grounding····· Good (3) Common grounding····· Not allowed

For the grounding methods of (1) and (2) above, use a cable with 2 mm^2 or more cross section.
Make a ground point near the GOT as much as possible to shorten the ground cable.

■For GT2104-R, GT2104-P, and GT2103-P

Use independent grounding as much as possible for the GOT.
Ground the GOT with a ground resistance of 100 Ω or less.
When independent grounding cannot be applied for the GOT, use shared grounding as shown in (2) below.

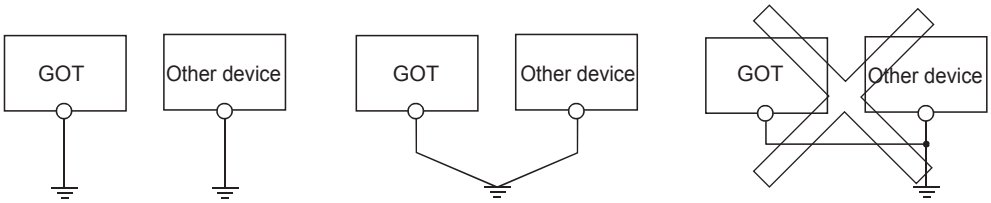

(1) Independent grounding····· Best (2) Shared grounding····· Good (3) Common grounding····· Not allowed

Make a ground point near the GOT as much as possible to shorten the ground cable.

Grounding examples

■Independent grounding (Best)

For grounding for control system, ground the system at one end.

Especially for the control devices communicating each other, ground the system at one end.

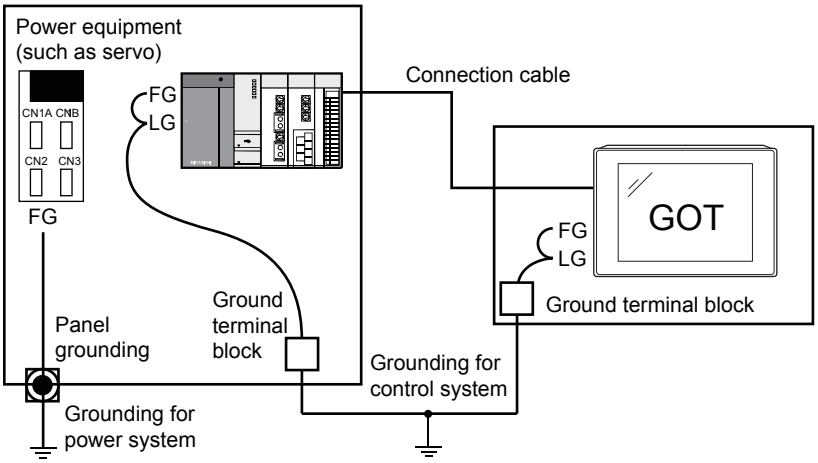

■Shared grounding (Good)

Ground the system at one end.

To prevent noise from entering the GOT, use a short and thick wire for grounding between the ground and the control panel to lower ground resistance.

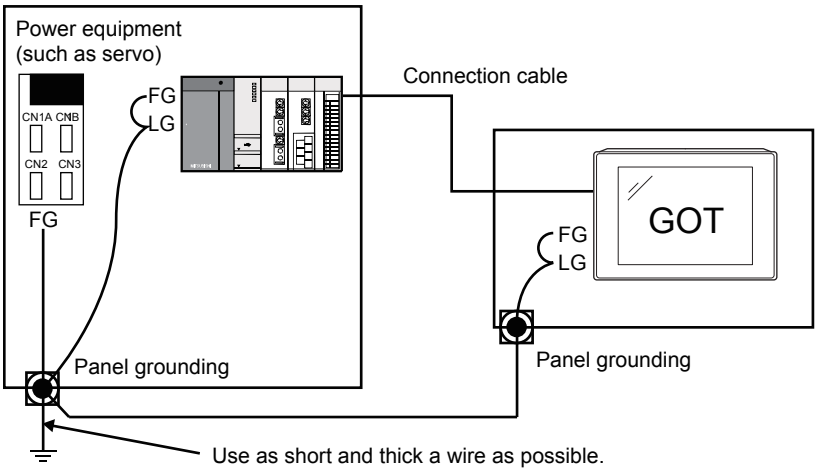

■Common grounding (Not allowed)

Do not connect the ground cables of the power equipment and control equipment with a wire.

When the cables are connected, noise from the power equipment may affect the control equipment, causing a malfunction.

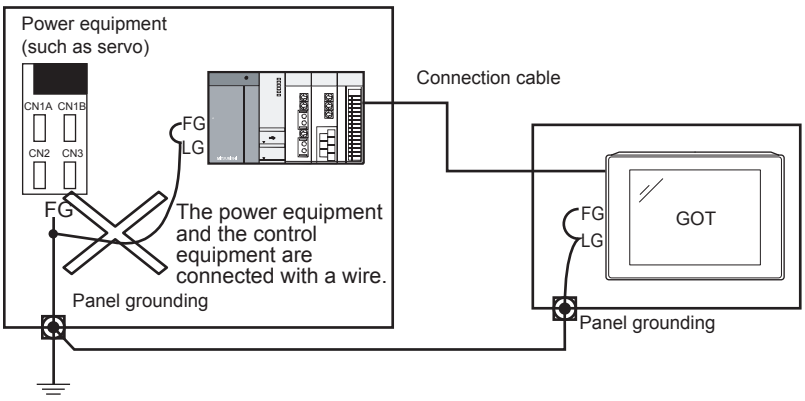

Recommended terminal shape (GT27, GT25, GT23, GT2107-W, GT2105-Q)

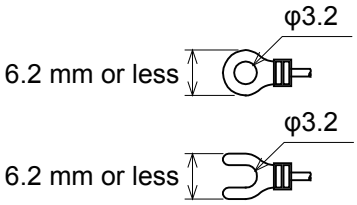

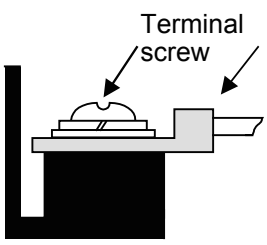

When wiring one cable to one terminal

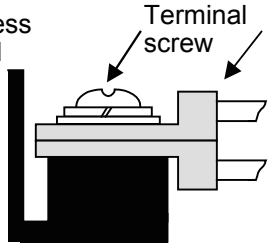

When wiring two cables to one terminal

Applicable solderless terminal
RAA1.25-3, V2-S3.3, V2-N3A, FV2-N3A

Causes of wiring-related malfunction and countermeasure examples

Causes of a malfunction due to grounding of the GOT include potential difference caused by grounding and noise.
The following measures may reduce potential difference and noise.

Wiring of the ground cable and power line of the GOT

When the ground cable and power line of the GOT are installed together, the GOT may malfunction due to noise.
Separating the ground cable and power line of the GOT in wiring reduces the influence of noise.

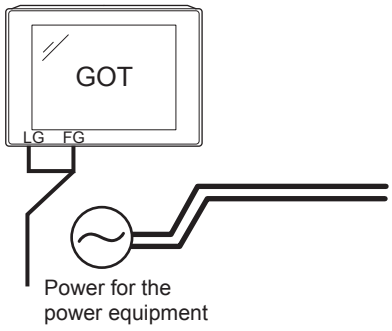

Good example: The ground and power cables are separated in wiring.

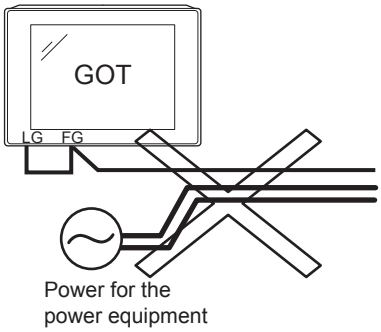

Bad example: The ground and power cables are installed together.

When leading the ground cable from the control panel having control equipment into the control panel having the GOT

When a single ground cable is led from the control panel having control equipment, including a PLC, into the control panel having the GOT, the cable may be directly connected to the power terminal of the GOT.

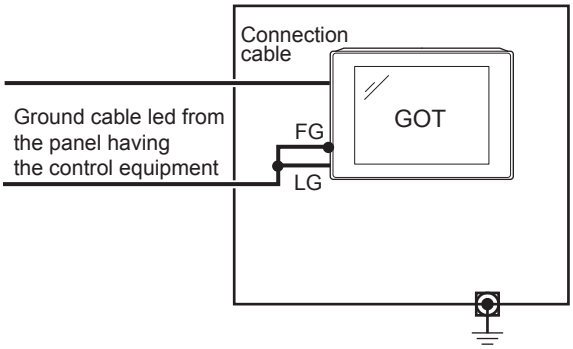

The malfunction due to the potential difference caused by the grounding in such a case may be prevented by reducing the voltage as shown in countermeasure example 1 below.

■Countermeasure example 1

When any potential difference between the ground cable and the control panel having the GOT affects the GOT, also connect the ground cable to the control panel.

When Countermeasure example 1-1 is difficult to be taken, such as the wiring is impossible, carry out wiring as shown in Countermeasure example 1-2.

Measure example 1-1

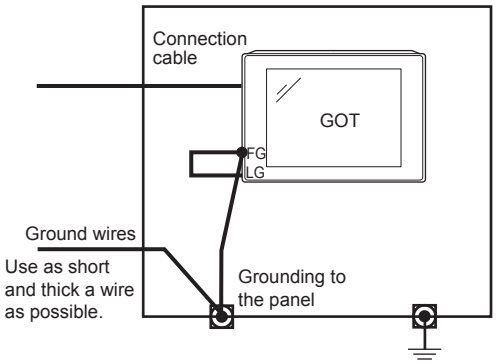

Measure example 1-2

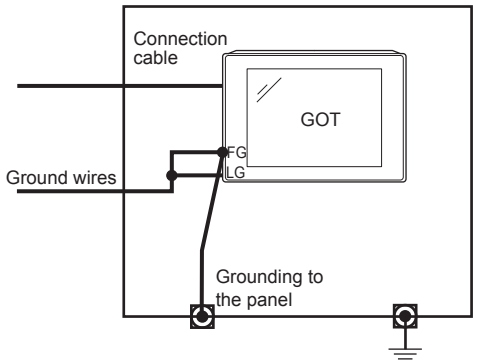

If noise further affects the GOT by taking Countermeasure example 1, Countermeasure example 2 may reduce the influence of noise.

■Countermeasure example 2

If the noise from the control panel having the GOT adversely affects the GOT even after Countermeasure example 1 is taken, attach the ferrite core (KITAGAWA INDUSTRIES CO.,LTD. RFC-H13 or equivalent).

When attaching a ferrite core, insert the cable through the ferrite core several times (approximately three times).

When Countermeasure example 2-1 is difficult to be taken, such as the wiring is impossible, carry out wiring as shown in Countermeasure example 2-2.

Measure example 2-1

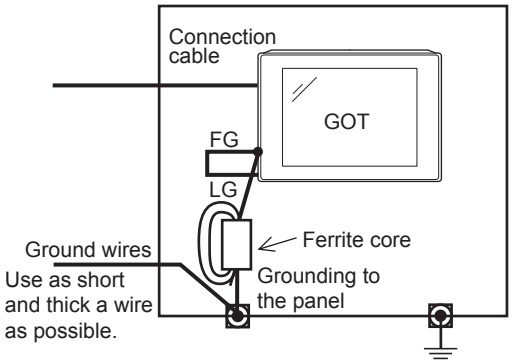

Measure example 2-2

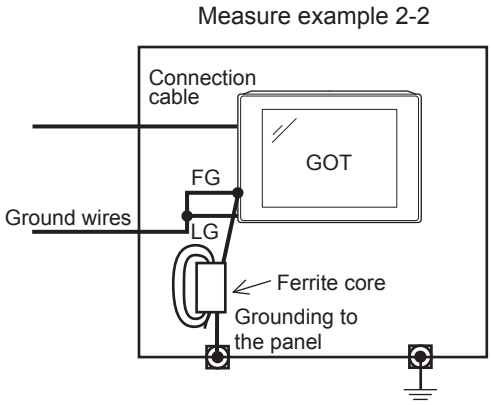

8

8.4 Wiring Inside and Outside the Control Panel

Control panel inside wiring

As shown in the following figure, power lines, including power cables and servo amplifier driving cables, and communication cables, including bus connection cables and network cables, must not be mixed.
Mixing the power lines and communication cables may cause a malfunction due to noise.
When devices that generate surge noise, including a molded case circuit breaker (MCCB), electromagnetic contactor (MC), relay (RA), solenoid valve, and induction motor, are used, a surge suppressor is effective.
For the surge suppressor, refer to the following.
☞ Page 333 Attaching a Surge Suppressor to Control Equipment

Separately wired power lines and communication cables

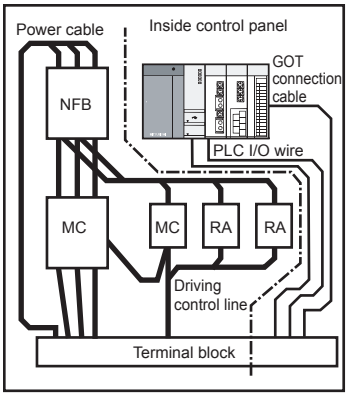

Mixed power lines and communication cables

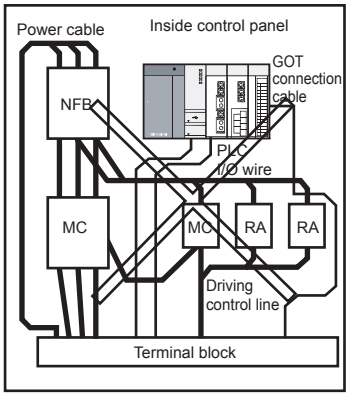

Control panel outside wiring

To lead the power line and the communication cable outside the control panel, open cable holes at two separate places to lead the cables separately out.
When the cables are led out through the same cable hole for wiring reasons, the cables are more easily affected by noise.

Wiring the power lines and the communication cables outside the control panel

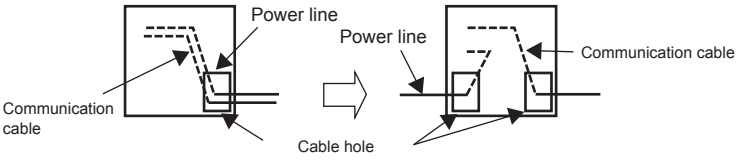

Separate the power line and communication cable each other 100 mm or more in the duct.
When the cables are close each other for wiring reasons, use a separator (made of metal).
Doing so reduces the noise influence.

Wiring of power line and communication cable in the duct

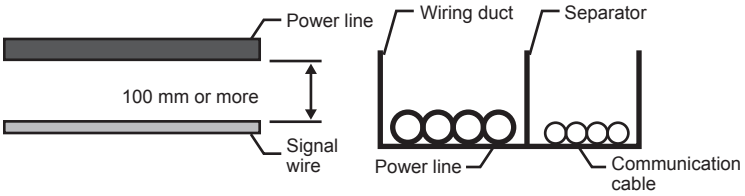

8.5 Attaching a Surge Suppressor to Control Equipment

When the GOT fails to work properly, for example a communication error occurs, in synchronization with the ON/OFF status of the specific control equipment, including a molded case circuit breaker, electromagnetic contactor, relay, solenoid valve, and induction motor (hereinafter described as load), the GOT may be affected by surge noise.
In such a case, separate the ground cable and the communication cable from the load.
When the ground cable or communication cable has to be installed close to the load, attaching a surge suppressor is effective.
Attach a surge suppressor closest to the load.

Measures against AC inductive load

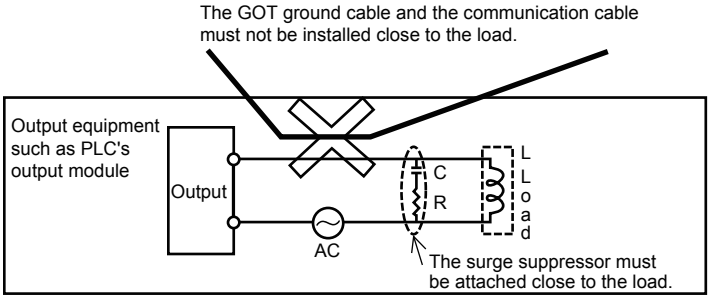

Measures against DC inductive load

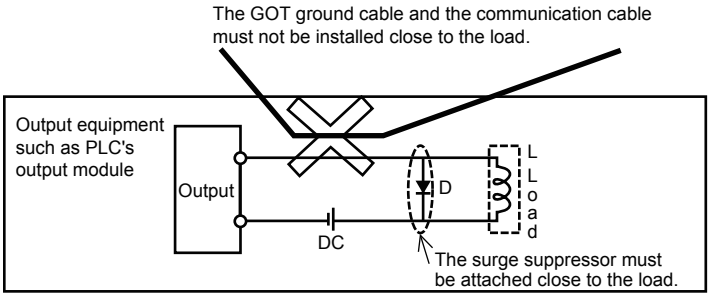

8

8.6 Grounding the Extension Unit

Wiring of the FG cable of a bus connection cable

This section explains wiring of FG cables when a GOT is connected to a PLC CPU with bus connection cables.

Point

Cables connected to the PLC CPU

Do not install the connection cable together with or close to the main circuit lines (high voltage, large current) or I/O signal lines.

Connecting the QCPU/Motion CPU (Q series) and GOT

Grounding of the FG cable for the QCPU and Motion CPU (Q series) is unnecessary since they have no FG cable.

Connecting the QnACPU/ACPU/Motion CPU (A series) and GOT

Ground a GOT as shown below when GT15-C□EXSS-1 or GT15-C□BS is used.

Point

• Terminals of the GOT

Layout of terminal blocks of a GOT differs depending on the GOT model.Check the terminal layout of the GOT to be used and perform wiring.

• Ground cables

Up to two ground cables can be connected to each of LG and FG of the GOT.When three or more ground cables need to be connected, connect the third and later cables to the LG.

■For GT15-C□EXSS-1

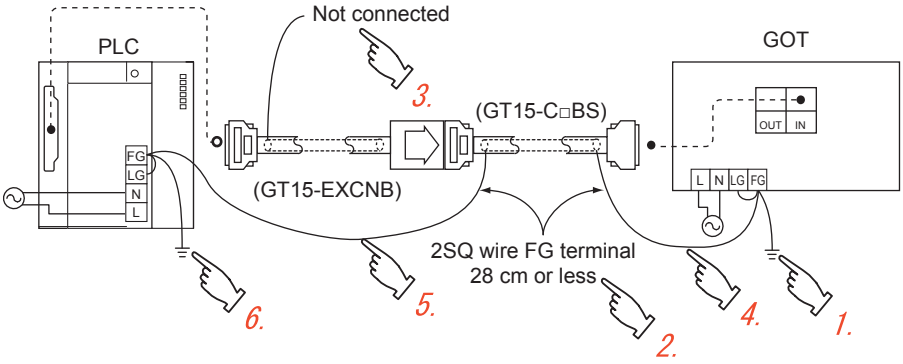

1. Connect the LG and FG of the GOT power supply at the terminal block and ground them with one cable.
2. Wire the FG cable of the GT15-C□BS. The length of the cable must be 28 cm or shorter.
3. Do not connect the ground cable for FG of the GT15-EXCNB.
4. Connect the FG cable of the GT15-C□BS at the GOT side to FG of the power terminal block of the GOT.
5. Connect the FG cable of the GT15-C□BS at the PLC side to the FG of the power supply module of the PLC.
6. Connect the LG and FG of the PLC at the terminal block and ground them with one cable.

■For GT15-C□BS

Perform the grounding at the GOT side (described in (1)) for both GOTs.

9 HANDY GOT POWER WIRING AND SWITCH HANDLING

- Page 337 Internal Wiring Diagram of Handy GOT
- Page 339 Power Wiring
- Page 343 Wiring inside and outside the panel
- Page 345 Switch Wiring

⚠WARNING

- Make sure to attach the back cover to the Handy GOT before turning on the power and starting operation after the installation or wiring work.
  Not doing so may cause an electrical shock.
- Be sure to shut off all phases of the external power supply used by the system before wiring.
  Failure to do so may result in an electric shock, product damage or malfunctions.
- The DC power supply is used for the Handy GOT.
  Supply power within the specifications to the power supply, operation switch, and emergency stop switch.
  Not doing so may cause a fire or failure.
- Correctly wire the 24 V DC power cable (terminal) of the Handy GOT and [+]/[-] of the DC power supply as shown in this manual.
  Not doing so may cause a failure.
- Ground the drain wire (FG) of the Handy GOT.
  Do not use common grounding with heavy electrical systems.
  Not doing so may cause an electric shock or malfunction.
- When processing the connection cable or performing wiring work, avoid foreign matter such as chips and wire offcuts entering the Handy GOT.
  Not doing so can cause a fire, failure or malfunction.

⚠CAUTION

- When the Handy GOT is used, the cable connected to the unit must be run in ducts or clamped.
  Not doing so can cause the unit or cable to be damaged due to the dangling, motion or accidental pulling of the cables or can cause a malfunction due to a cable connection fault.
- When the Handy GOT is used, do not hold and pull the cable portion to unplug the cable connected to the unit.
  Doing so can cause the unit or cable to be damaged or can cause a malfunction due to a cable connection fault.
- Plug the communication cable into the connector of the connected unit and tighten the mounting and terminal screws in the specified torque range.
  Undertightening can cause a short circuit or malfunction.
  Overtightening can cause a short circuit or malfunction due to the damage of the screws or unit.

For the dimensional drawing of connection cables, refer to the following.

☞ Page 389 APPENDICES

General preventive measures against noise

There are two kinds of noises: Radiated noise that is transmitted into the air and Conductive noise that is directly transmitted along connected lines.
Countermeasures must be taken considering both kinds of noises and referring to the following 3 points.

■Protecting against noise

Keep signal lines away from noise sources such as a power cable or a highpower drive circuit.
Shield the signal lines.

■Reducing generated noise

Use a noise filter, etc. to reduce the level of the noise generated due to a source such as a high-power motor drive circuit.
Attach surge killers to the terminals on the No Fuse Breaker (NFB), electromagnetic contactors, relays, solenoid valves, and generators to suppress noise interference.

■Releasing noise to the ground

Make sure to connect the ground cable to the ground.
Use a short and thick cable to lower its impedance.
Ground the power system and the control system separately.

Operation at momentary power failure

The GOT continues to operate even upon 5ms or shorter instantaneous power failure.
The GOT stops operating if there is extended power failure or voltage drop, while it automatically resumes operation as soon as the power is restored.

9.1 Internal Wiring Diagram of Handy GOT

GT2506HS-V

The following shows the internal wiring diagram of GT2506HS-V.

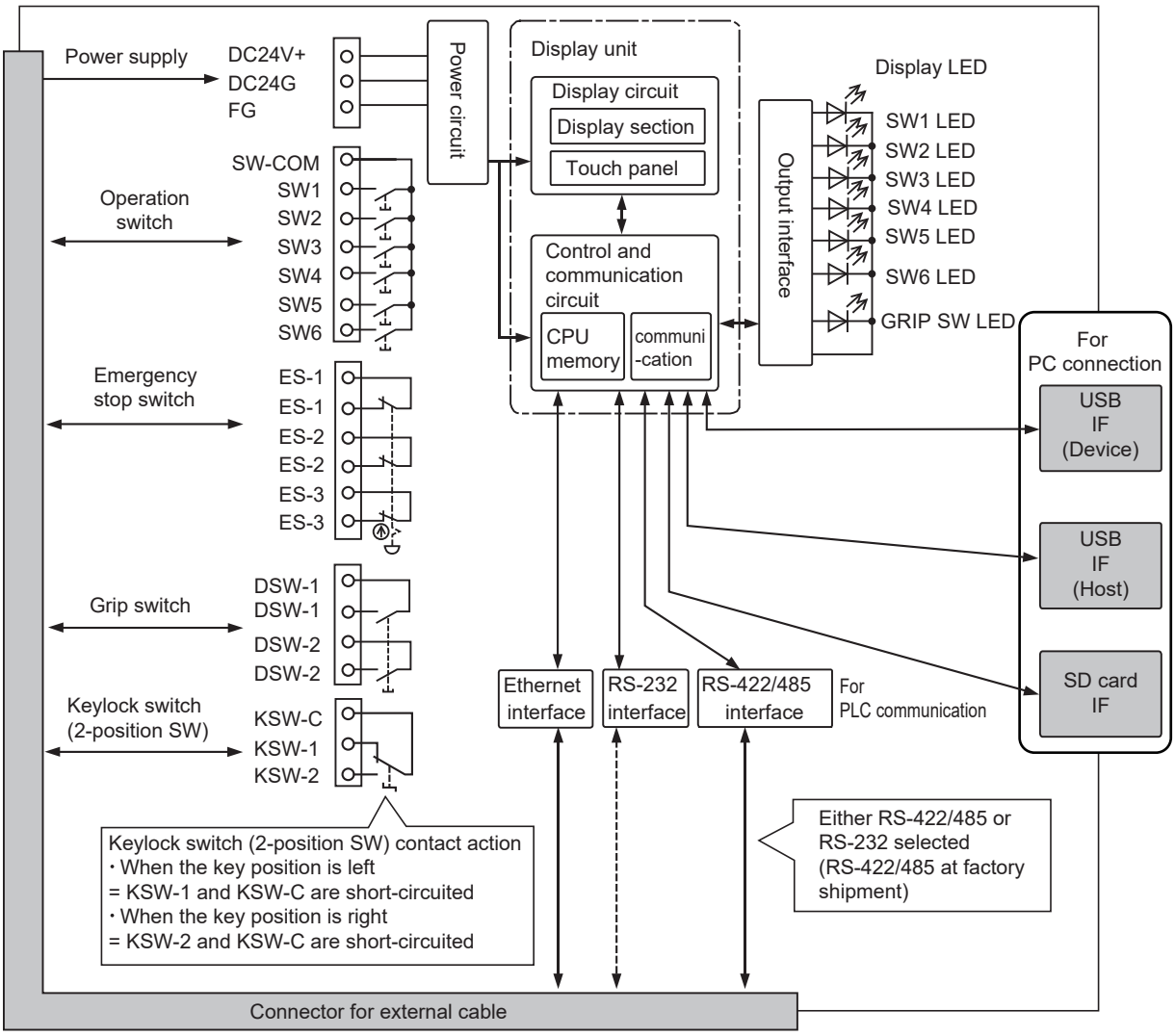

GT2505HS-V

The following shows the internal wiring diagram of GT2505HS-V.

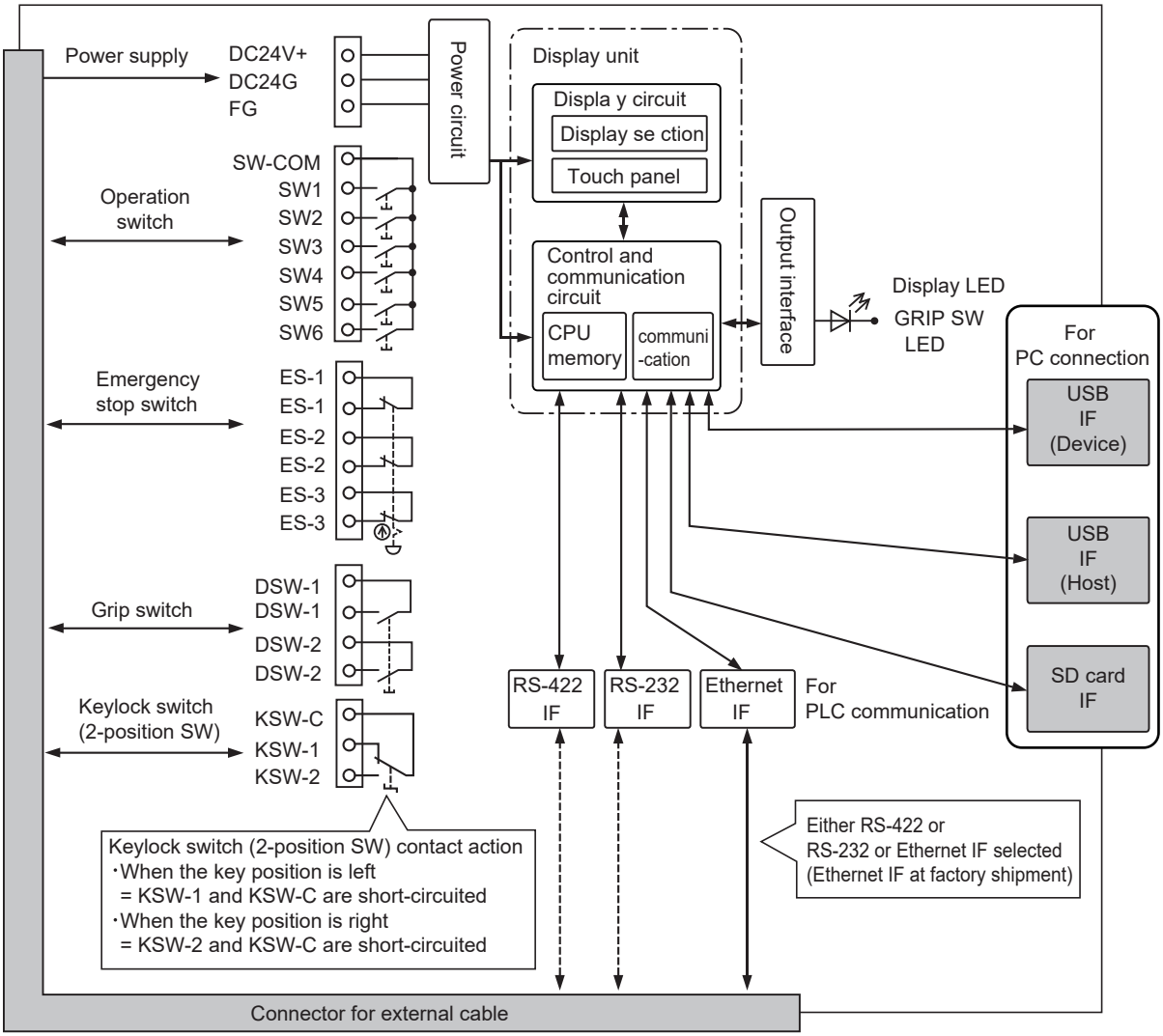

9.2 Power Wiring

Power wiring and grounding

GOT power is supplied from the external power.

In addition, the following table shows the input power supply voltage and the consumed current.

Item		Specifications	
		GT2506HS-VTBD	GT2505HS-VTBD
Input power supply voltage		24VDC(+10% -15%)	
Power consumption		11.6W or less (480mA/24VDC)	8.4W or less (350mA/24VDC)
	At backlight off	8.2W or less (340mA/24VDC)	7.0W or less (290mA/24VDC)
Inrush current		30A or less (at max. load) 2ms	

Example of feeding with external power

Connect the external cable to the external power.

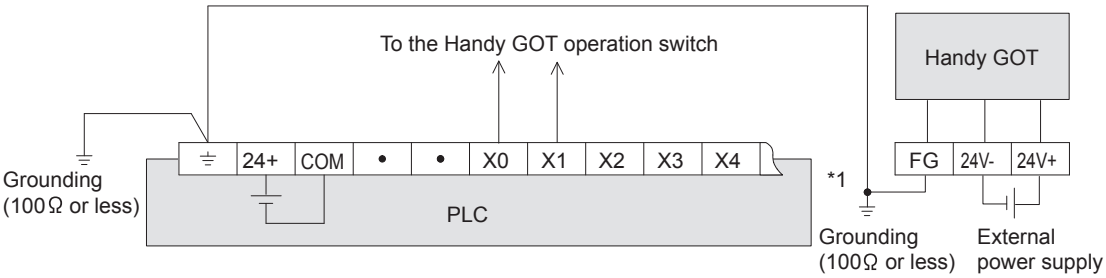

*1 Cautions for grounding with the input power

■When the input powers are the same

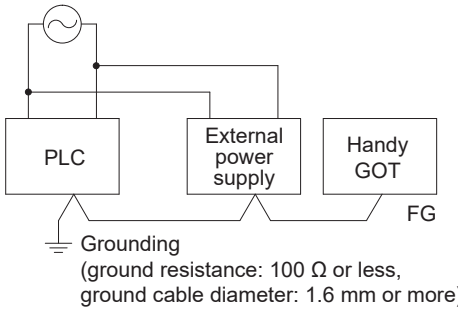

When the input powers of the PLC main unit and external power (24VDC) are the same, connect the FG cable of the GOT and the ground terminal of the PLC (⏚) and carry out the grounding.

■When the input powers are different

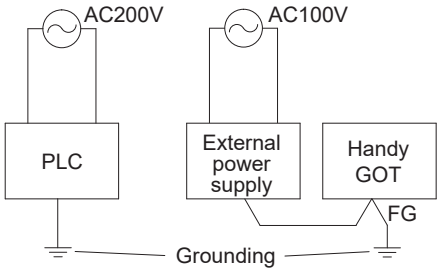

(ground resistance: 100 Ω or less, ground cable diameter: 1.6 mm or more)

When the input powers are different (PLC: 200VAC, Power: 100VAC), connect the ground terminal (⏚) of PLC and the FG cable of GOT separately and carry out the independent grounding.

Pin layout

Cable		Terminal No.		
		24VDC+	24VDC-	FG
External cable	GT11H-C□□□-37P	36,37 (Short-circuit inside of the connector)	18,19 (Short-circuit inside of the connector)	1
	GT11H-C□□□	Red, (core wire 4)	Black, (core wire 4)	Shield *1
Relay cable		24+ (label)	24G (label)	FG (label)
Connector conversion box		Terminal block 1) 1	Terminal block 1) 3	Terminal block 1) *2 2

*1 The external cable has three braided shields. Bundle the three shields and ground them.

*2 Be sure to ground FG terminal.

The cause of malfunctions related wiring/Remedy

Grounding of the GOT may cause electric potential difference and noise interference, which may result in GOT malfunctions. These problems may be resolved by taking the following measures.

Wiring path of the GOT's ground cable and power line

Bundling the GOT's ground cable and power line together can cause interference noise, which may result in malfunctions. Keeping the GOT's ground cable and power line away from each other will help minimize noise interference.

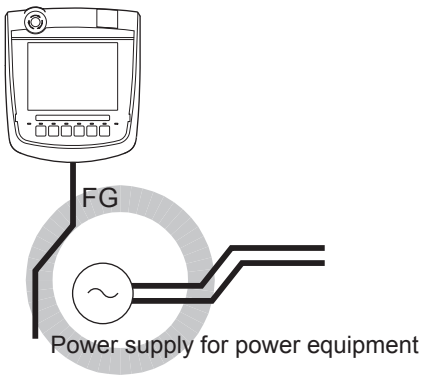

Good: Wiring the ground cable away from the power cable

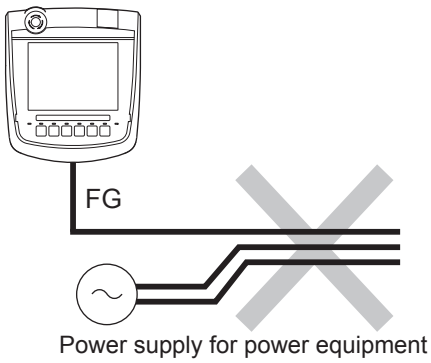

Bad: Bundling the ground cable and the power cable

Connecting the ground cable from the panel that houses control equipment to the panel to which the GOT is grounded

When running a single ground cable from the panel that houses such piece of control equipment as a PLC to the panel to which the GOT is grounded, the ground cable may have to be directly connected to the terminal on the GOT.

When using the connector conversion box

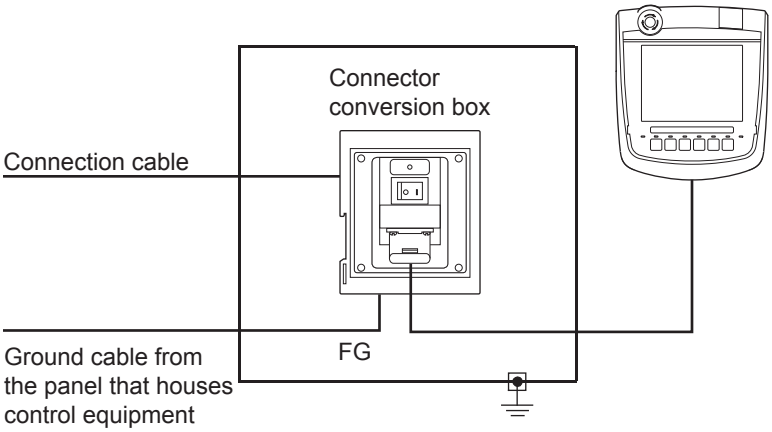

When using the external cable

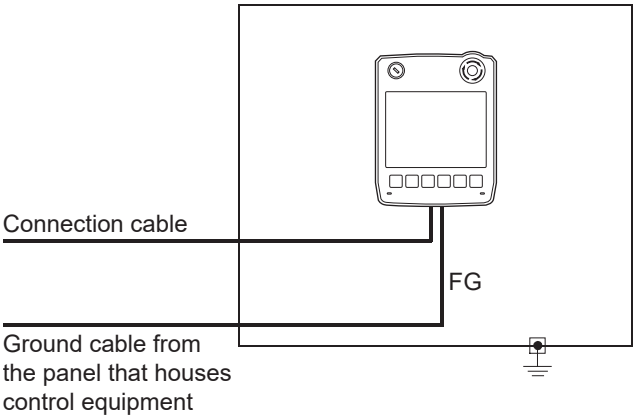

If electric potential difference between the ground points created by it causes malfunctions, lowering the voltage as shown in Remedy 1 below may solve the problem.

■Remedy 1 (Refer to the figures Remedy 1-1 and 1-4 below.)

If the electric potential difference between the ground cable and the panel that houses the GOT is creating problems, connect the ground cable to the panel also.

If taking Remedy 1 worsens noise interference, taking Remedy 2 may alleviate it.

When using the connector conversion box

If the wiring method as shown in Remedy 1-1 is not feasible, follow Remedy 1-2.

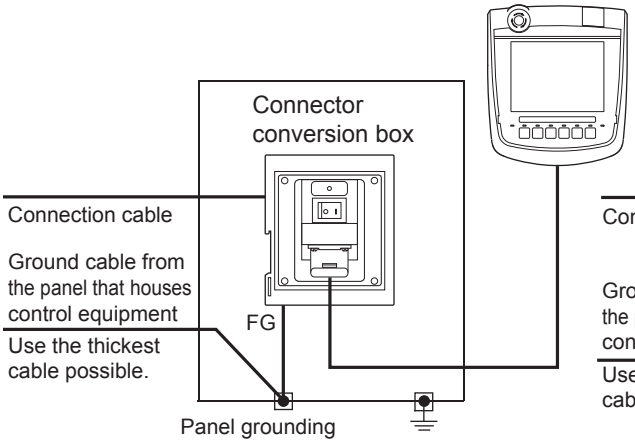

Remedy1-1

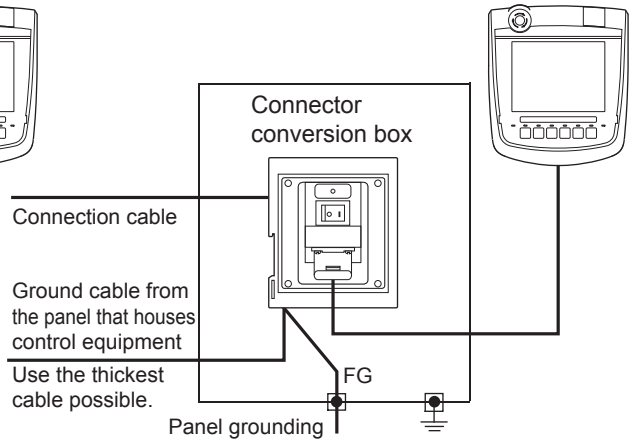

Remedy1-2

When using the external cable

If the wiring method as shown in Remedy 1-3 is not feasible, follow Remedy 1-4.

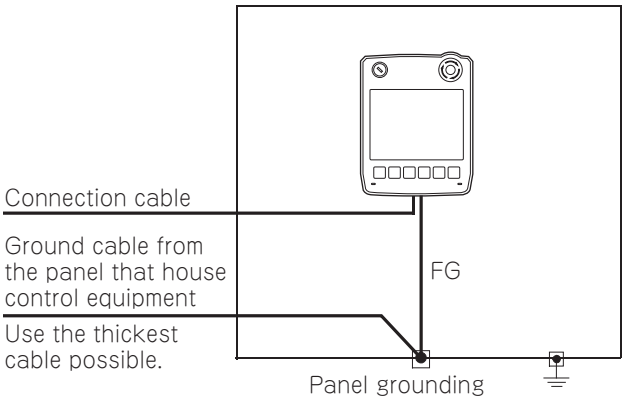

Remedy1-3

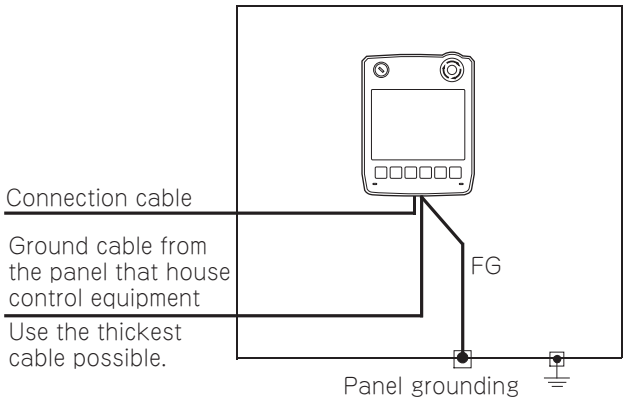

Remedy1-4

■Remedy 2 (Refer to the figures Remedy 2-1 and 2-2 below.)

Attach a ferrite core to the cable if noise from the GOT panel has adverse effects on the GOT when Remedy 1 is taken.

Wind the wire around the ferrite core several times (approx. 3 times), if a ferrite core is used.

When using the connector conversion box

If the wiring method as shown in Remedy 2-1 is not feasible, follow Remedy 2-2.

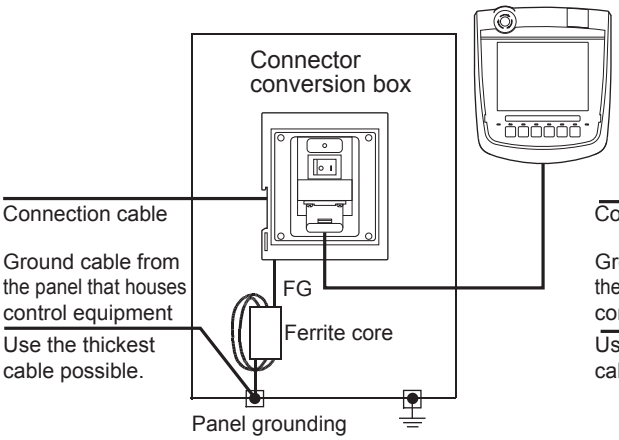

Remedy2-1

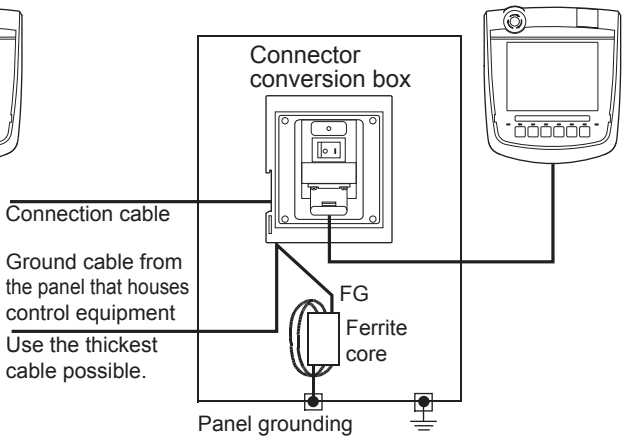

Remedy2-2

When using the external cable

If the wiring method as shown in Remedy 2-3 is not feasible, follow Remedy 2-4.

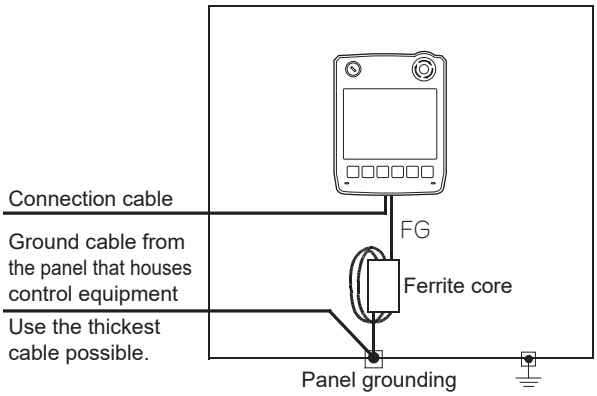

Remedy2-3

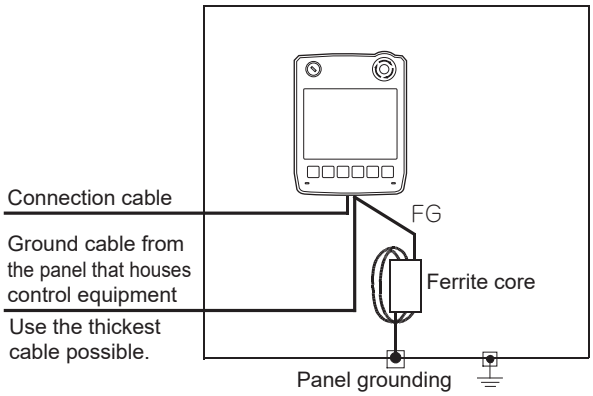

Remedy2-4

9.3 Wiring inside and outside the panel

Wiring inside

Run power lines, servo amplifier drive wires, and communication cables so that they do not cross each other.
Noise interference that is generated by cables that cross each other may cause malfunctions.
Surge suppressors are an effective way to filter out surge noise that is generated from no fuse breakers (NFB), electromagnetic contactors (MC), relays (RA), solenoid valves, and induction motors.
Refer to the section to follow for surge killers.
☞ Page 231 Installing the Battery

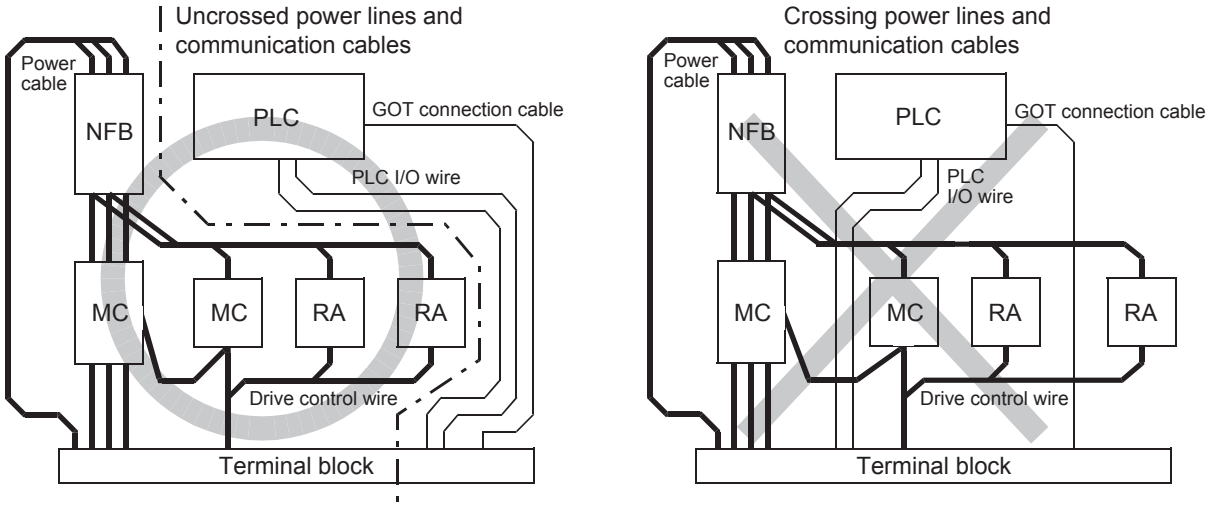

Outside the panel

To pull the power line and communication cable out of the panel, make two pullout holes away from each other and pull the cables through.
Putting both cables through the same pullout hole will increase noise interference.

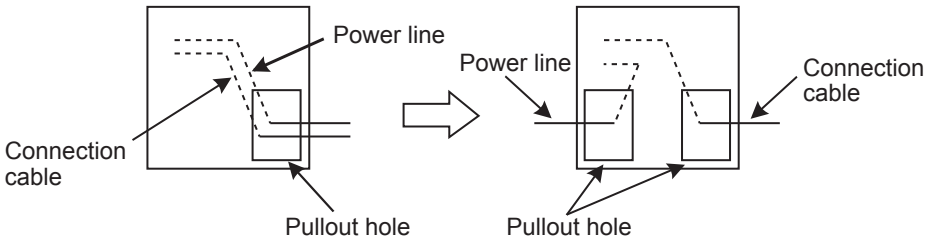

Keep the power line and communication cable inside the duct at least 100 mm away from each other.
If that is not possible, the use of a metal separator inside the duct can reduce noise interference.

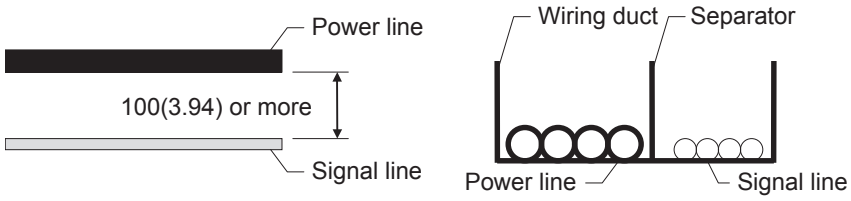

Unit: mm (inch)

Attaching surge killers to control equipment

If communication errors happen in synch with the on/off signals from certain control equipment (referred to as "load" hereafter) such as no fuse breakers, electromagnetic contactors, relays, solenoid valves, and induction motors, surge noise interference is suspected.

If this problem happens, keep the ground cable and communication cable away from the load.

If that is not possible, an installation of a surge killer will help reduce noise interference.

Place the surge killer as close to the load as possible.

Remedy for AC inductive load

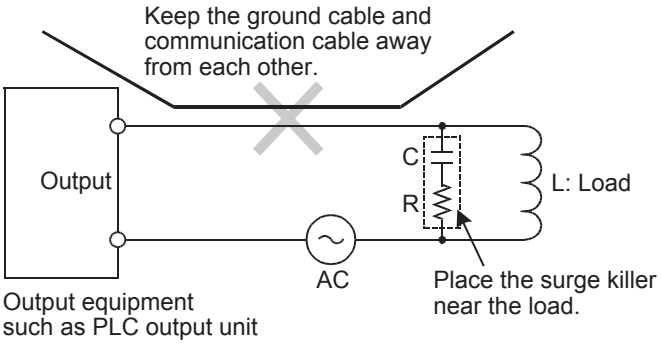

Remedy for DC inductive load

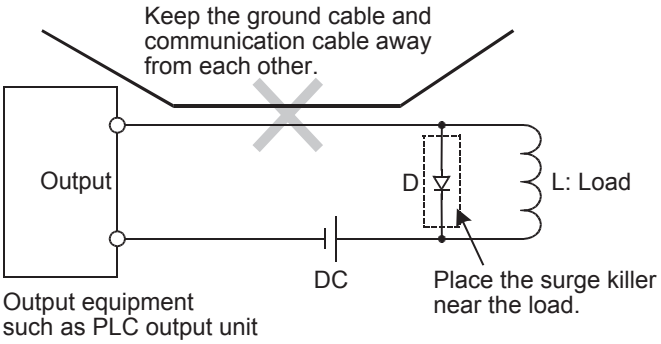

9.4 Switch Wiring

Overview for switch

Example) GT2506HS-V

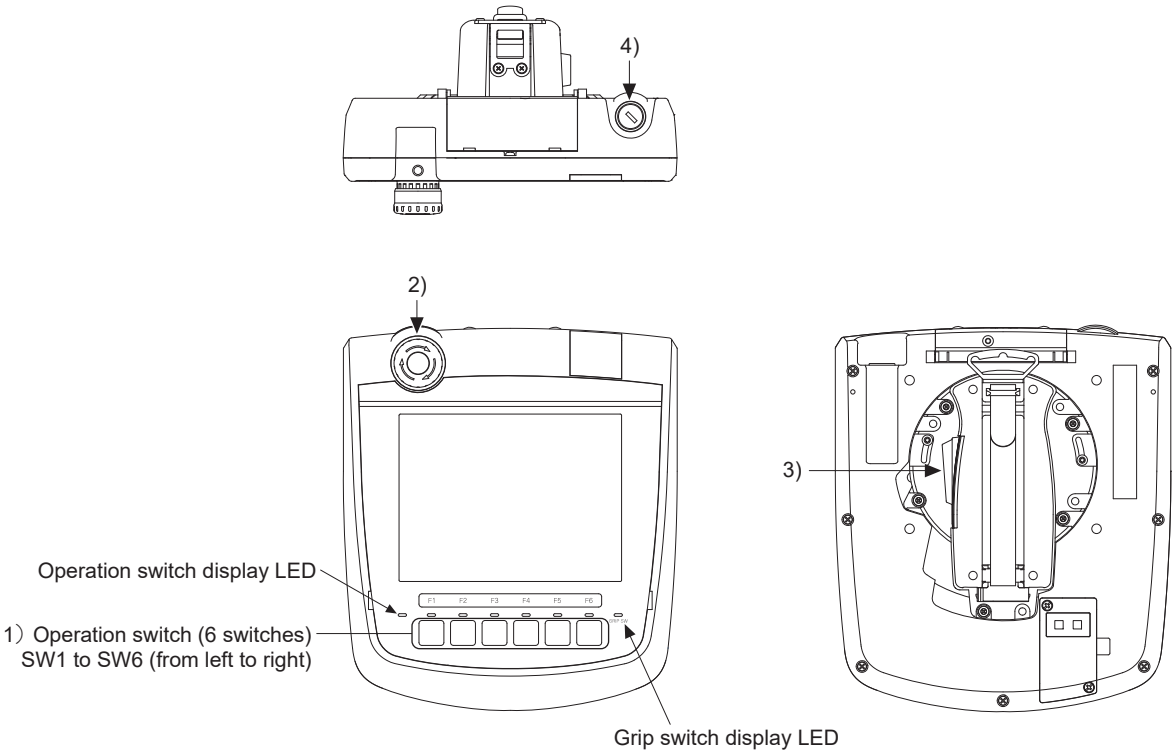

No.	Name	Abbreviations	Specifications
1)	Operation switch (6 switches)	SW1 to SW6	Switch for external direct wiring (independent contact)
2)	Emergency stop switch	ES-1, ES-2, ES-3	Switch for external direct wiring (independent contact)
3)	Grip switch	DSW-1, DSW-2	Switch for external direct wiring (independent contact)
4)	Keylock switch (2-position SW)	KSW-1, KSW-2	Switch for external direct wiring (independent contact)

Switch

The following switches require the connection to a PLC or a controller through an external cable.

Operation switch

Emergency stop switch

Grip switch

Keylock switch (2-position SW)

LED

The following LED is turned ON/OFF in the serial communication with a controller.

The independent wiring to control the LED is not required.

Operation switch display LED (GT2506HS-V only)

Grip switch display LED

Switch wiring example

When connecting general load

■Connector conversion box GT16H-CNB-42S

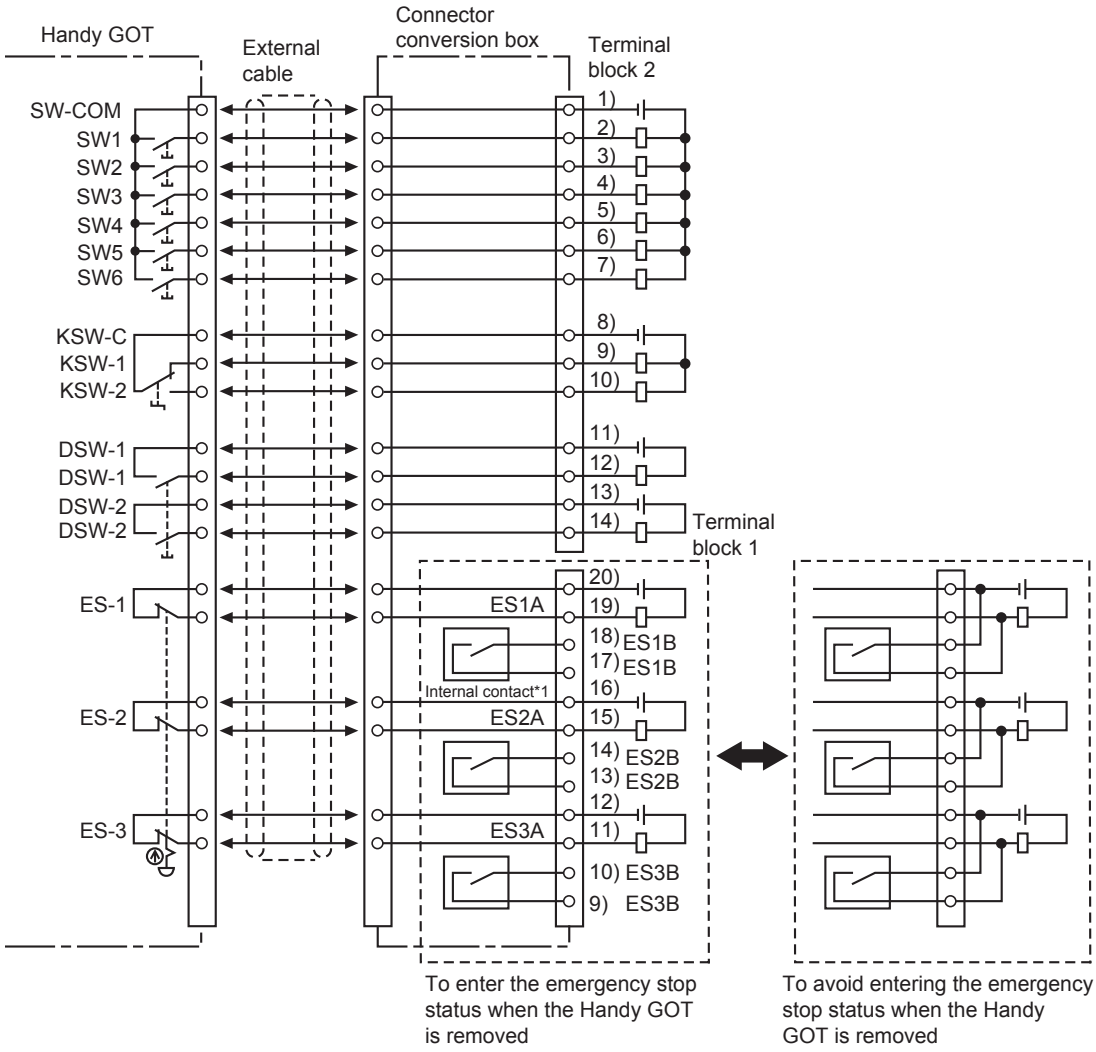

*1 The internal contact is closed when the power switch of the connector conversion box is turned OFF or the connector conversion box is not supplied with the power (POWER LED turns off.)

■Connector conversion box GT11H-CNB-37S or GT16H-CNB-37S

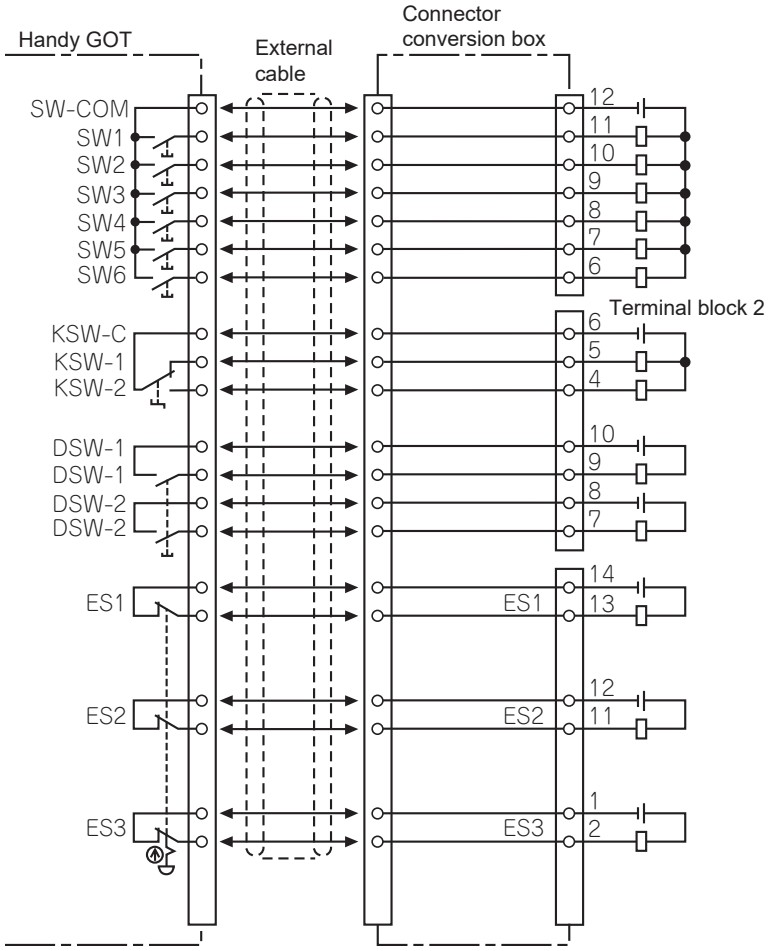

When connecting PLC input

■Connector conversion box GT16H-CNB-42S

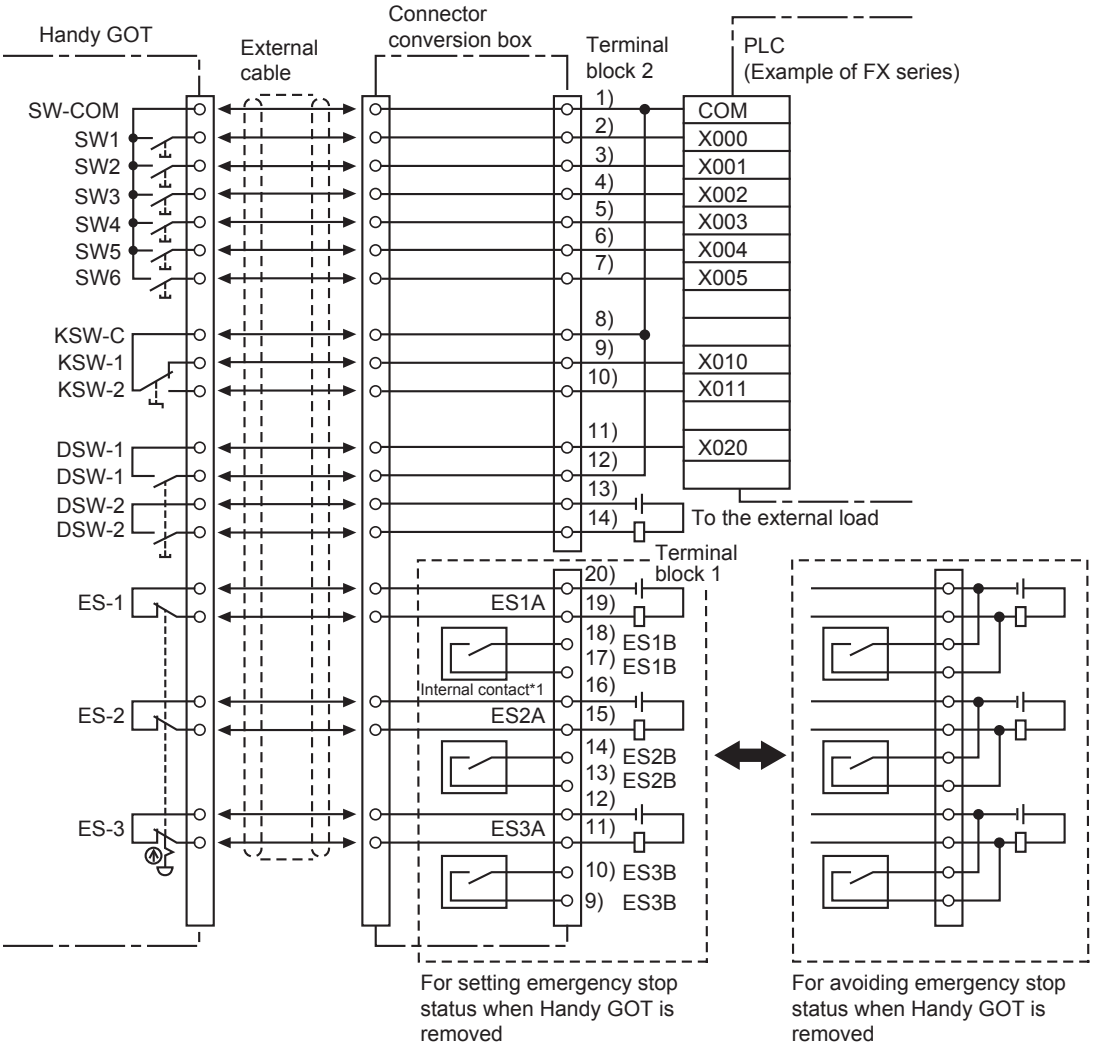

*1 The internal contact is closed when the power switch of the connector conversion box is turned OFF or the Connector Conversion Box is not supplied with the power (POWER LED turns off.)

■Connector conversion box GT11H-CNB-37S or GT16H-CNB-37S

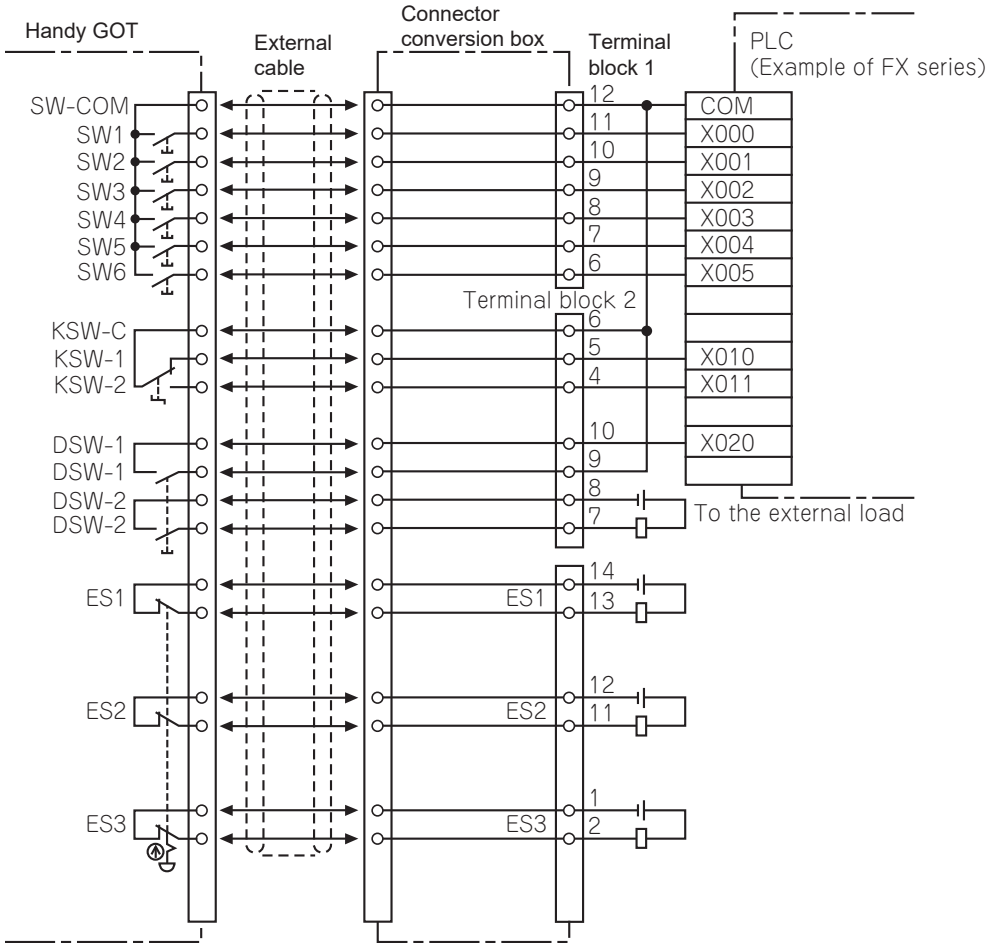

Operation switch wiring

The operation switch is connected to the PLC through an external cable and the connector conversion box.

Connection example

■Connector conversion box GT16H-CNB-42S

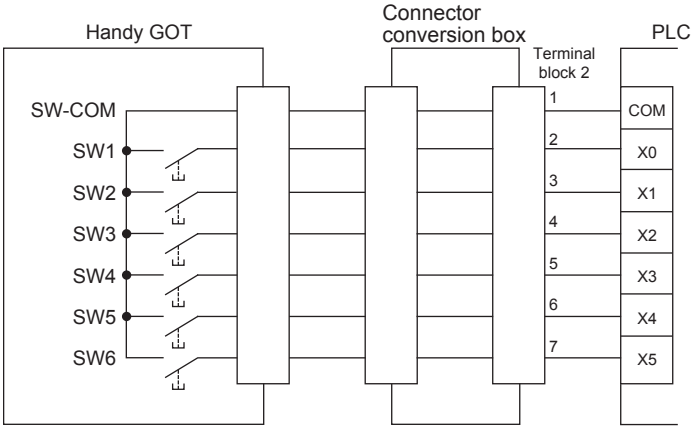

■Connector conversion box GT11H-CNB-37S or GT16H-CNB-37S

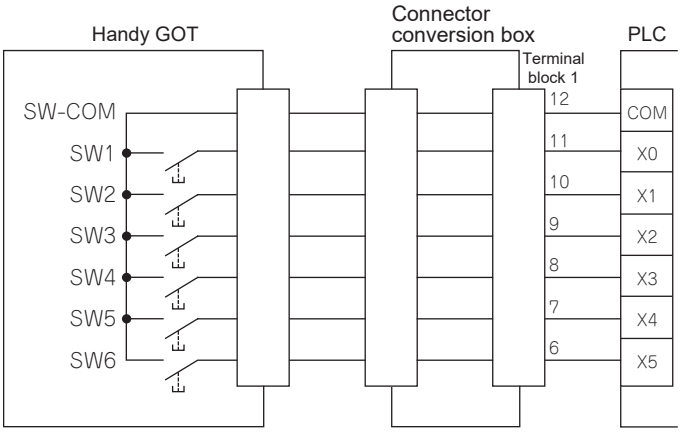

Pin layout

Product name	Model	Terminal No.						
		SW-COM	SW1	SW2	SW3	SW4	SW5	SW6
Connector Conversion Box	GT16H-CNB-42S	Terminal block 2 1	Terminal block 2 2	Terminal block 2 3	Terminal block 2 4	Terminal block 2 5	Terminal block 2 6	Terminal block 2 7
	GT11H-CNB-37S GT16H-CNB-37S	Terminal block 1 12	Terminal block 1 11	Terminal block 1 10	Terminal block 1 9	Terminal block 1 8	Terminal block 1 7	Terminal block 1 6

Operation switch input

The operation switch (SW1 to SW6) can directly connect to the PLC input and be used in the sequence program as general input devices.

The operation switch is loaded into the PLC as the momentary switch of the a contact.

When wired to PLC X0

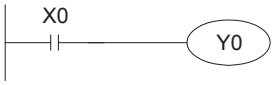

Operation switch action

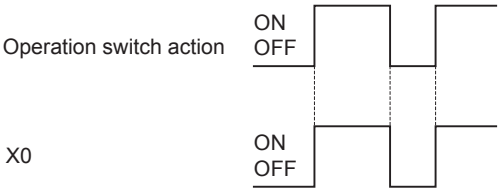

In the case of handling the input as the b contact or the alternate switch, create the input in the sequence program.

LED setting of operation switch (GT2506HS-V)

For operation check, the green LED is attached to the six operation switches (SW1 to SW6).
Each LED is related to the bit 0 to bit 5 of the word device.
The LED is lit when the bit value is 1, and not lit when it is 0.

Allocation of device to control LED

The device to control LED is allocated by the drawing software.
The external input and output function/output information (read device +1) set in [Read device (Controller→GOT)] of [System information] in [GOT Environment Setting] from [Common Settings] is allocated to the LED control.
The following shows the relationship between each bit and the LED of the external input and output function/output information.
The LED is lit when the bit value is 1 and not lit when the bit value is 0.
External input and output function/output information

b15	b14	b13	b12	b11	b10	b9	b8	b7	b6	b5	b4	b3	b2	b1	b0
										SW6	SW5	SW4	SW3	SW2	SW1

For example, when D100 is set in the read device of system information, each bit value of D101 is reflected to the LED lit/not lit.

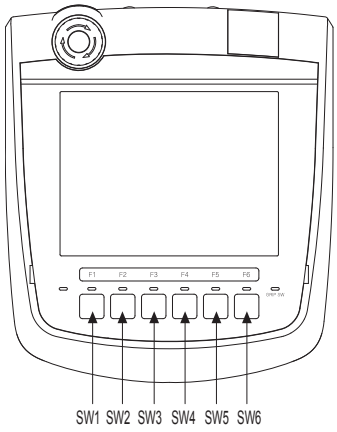

b0 of D101→LED of SW1
b1 of D101→LED of SW2
b2 of D101→LED of SW3
b3 of D101→LED of SW4
b4 of D101→LED of SW5
b5 of D101→LED of SW6

Drawing software settings

Set the system information in the following procedure.

1. Select [Common] → [GOT Environmental Setting] → [System Information] from the menu to display the [Environmental Setting] window.
2. Select [Use System Information].
3. In [Read Device (Controller→GOT)], set [First Device].
4. Click [Selection/Sort Setting] to display the [Selection/Sort Setting] dialog.
5. Set [External I/O Function Output Information] as a target item.

Click the [OK] button.

6. In [Write Device (GOT→Controller)], set [First Device].
7. Once the settings are configured, click the [OK] button to close the [Environmental Setting] window.

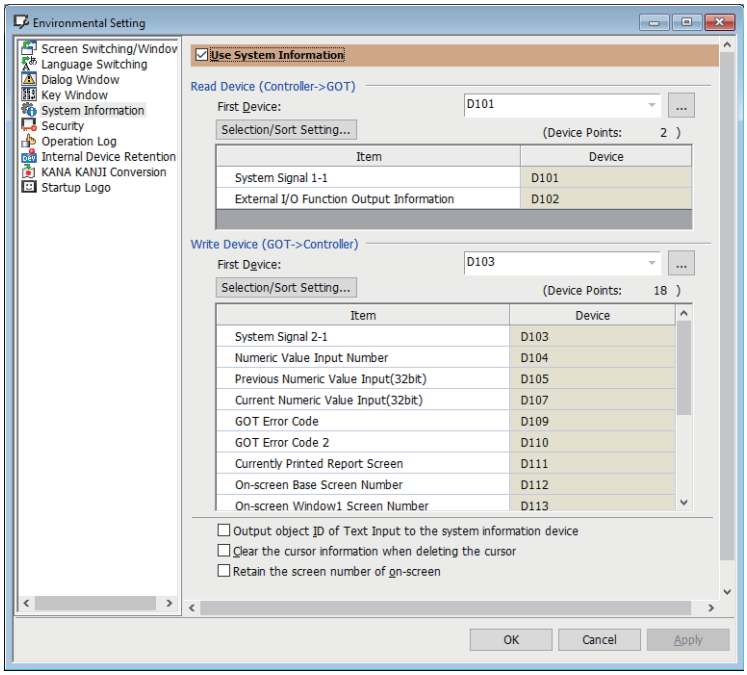

Program example

The following shows a sequence program example.

System information: Set the read device to D101 (using the drawing software)

Wiring: Wire the operation switch of SW1 to X0, SW2 to X1, SW3 to X2, SW4 to X3, SW5 to X4 and SW6 to X5.

Device allocation: The LED lit is allocated from M10 with the sequence program.

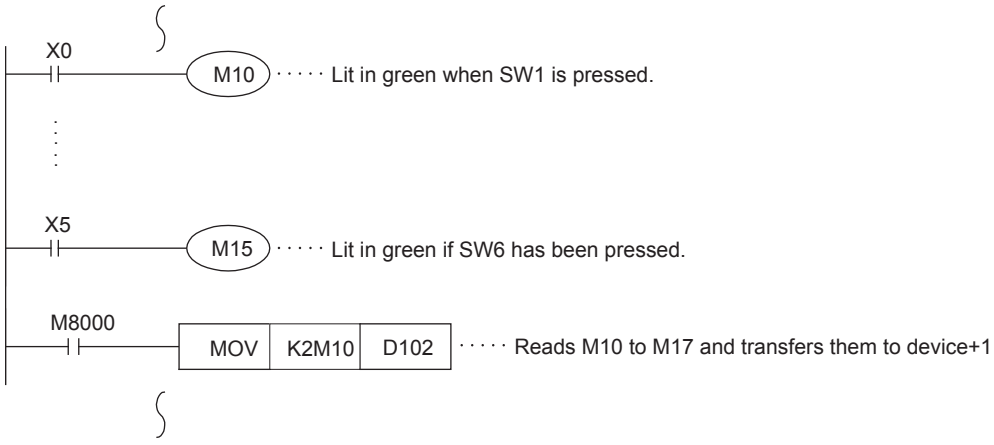

Operation switch name sheet creation (GT2506HS-V)

Fill out the switch name template included with the Handy GOT and transfer the template onto the OHP sheet to create an operation switch name sheet.
The following shows how to create the sheet.

Creating an operation switch name sheet

1. Prepare the switch name template and OHP sheet (clear and colorless) included with the Handy GOT.
2. Write an original switch name for the user on the template.
3. Use a copier to transfer the template onto the OHP sheet in full size (100%).

If you prepare an OHP sheet on your own, refer to the following specifications and prepare one that can be used with the copier.
Material: Polyester film
Thickness: 0.1 mm
After copying, cut the OHP sheet according to the shape of the template.

Point

Create the operation switch name sheet in the following dimensions.

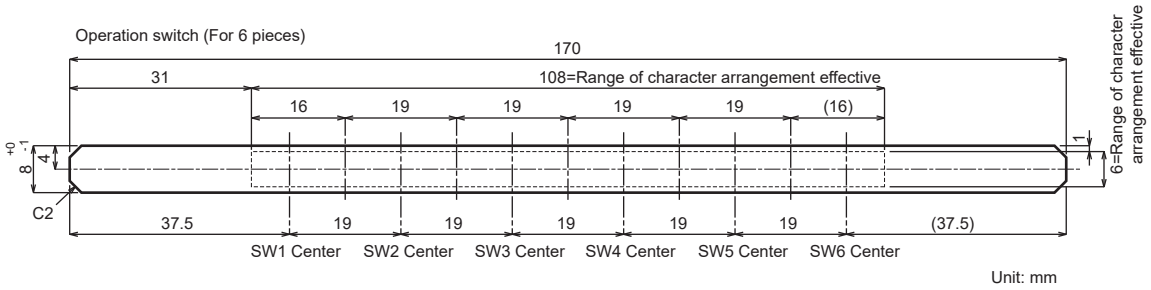

[Examples of creation]

Without partitions



With partitions



Mounting the operation switch name sheet

1. Insert the operation name sheet to the slit from side.

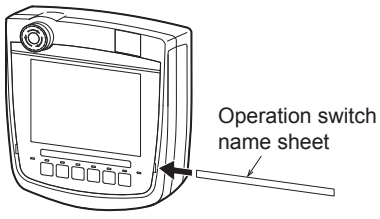

Emergency stop switch wiring

The emergency stop switch is connected to the PLC with an external cable via the connector conversion box.
Use the emergency stop switch signal as control signals of external device power ON/OFF.
Do not use it as the input signal of external device.
When turning ON/OFF the external device power, set the load up to 24VDC/1A (contact specification).
For the emergency stop circuit, be sure to configurate the circuit outside the PLC.

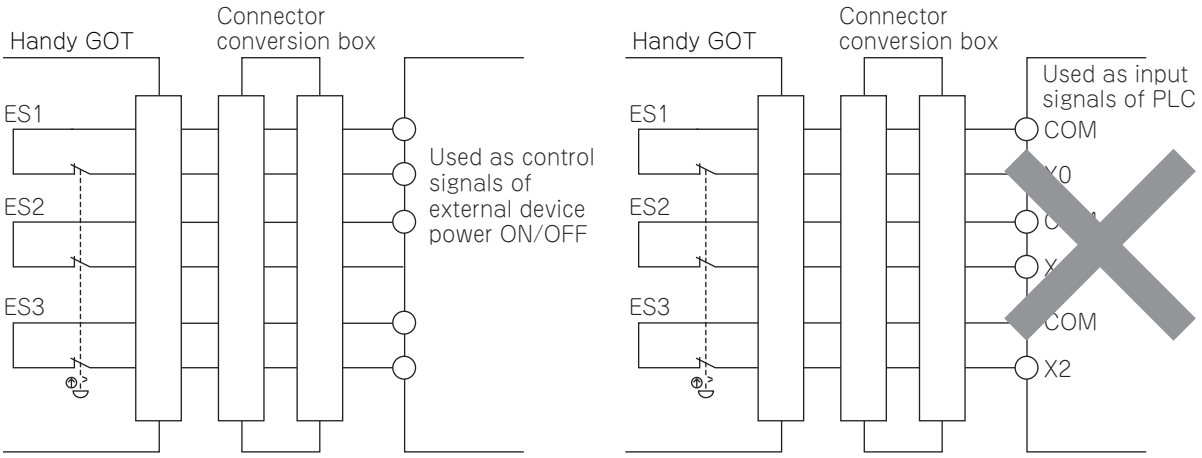

For the emergency stop SW, the b contact type is used.
When the Handy GOT is removed from the connector conversion box, the emergency switch goes off, and the Handy GOT goes into the same state as when the switch is pressed.
Connector conversion box(GT16H-CNB-42S) contains a parallel circuit to avoid emergency stop while the Handy GOT is being removed.
Connector conversion box(GT16H-CNB-42S) requires wiring a parallel circuit.

Example of connection using a connector conversion box (GT16H-CNB-42S)

■When setting the connector conversion box to the emergency stop state while Handy GOT is removed

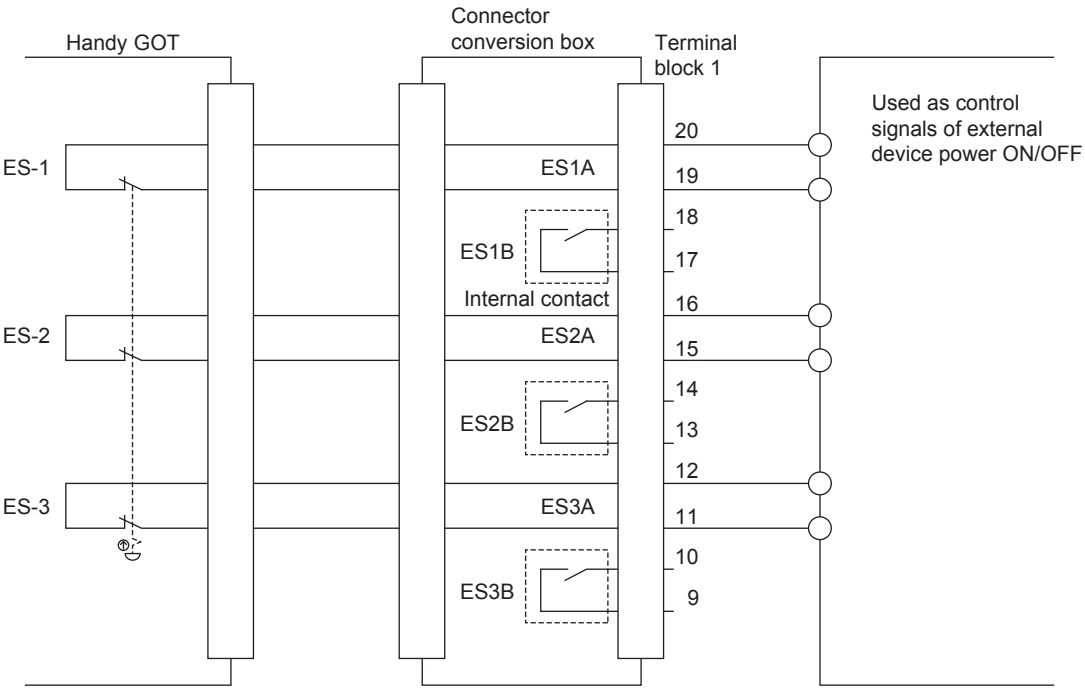

■When avoiding to set the connector conversion box to the emergency stop state while Handy GOT is removed

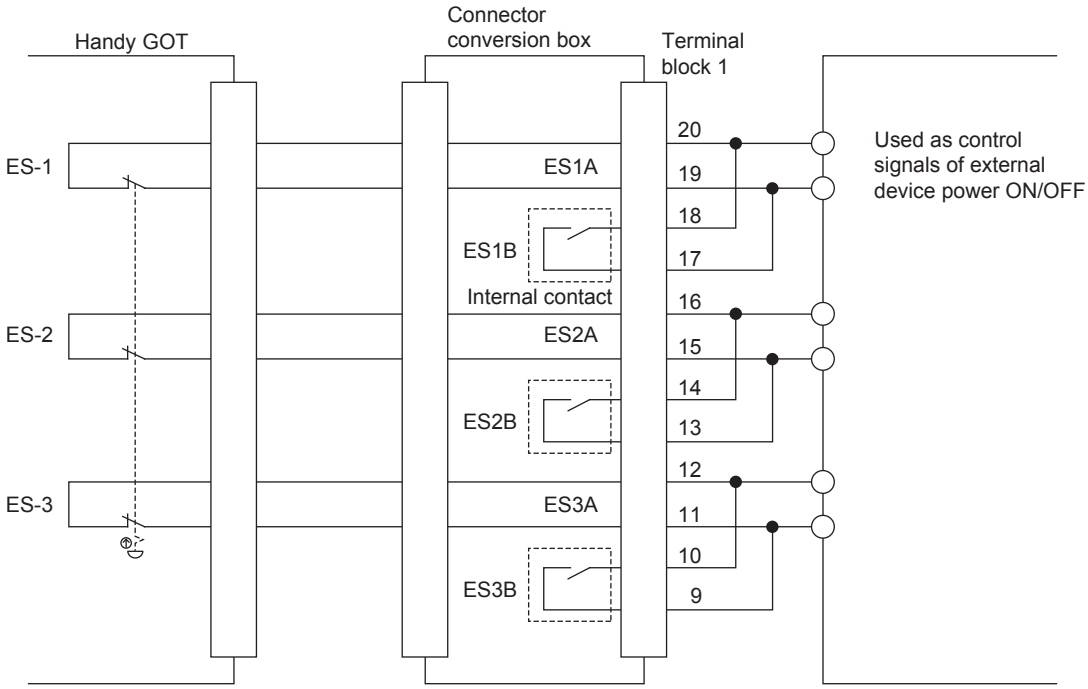

The internal contact operates as follows.

When the connector conversion box is supplied with the power and the power switch is ON (POWER LED turns on.)

Since the internal contact opens and the insulation status occurs between ES□Bs, the status between ES□As coordinates with those of the emergency stop switch and the external cable.

When the connector conversion box is not supplied with the power and the power switch is OFF (POWER LED turns off.)

Since the internal contact closes and the short-circuit status occurs between ES□Bs, the status between ES□As closes regardless of the status of the emergency stop switch and the external cable.

When using the connector conversion box (GT11H-CNB-37S or GT16H-CNB-37S)

■When setting the connector conversion box to the emergency stop state while Handy GOT is removed

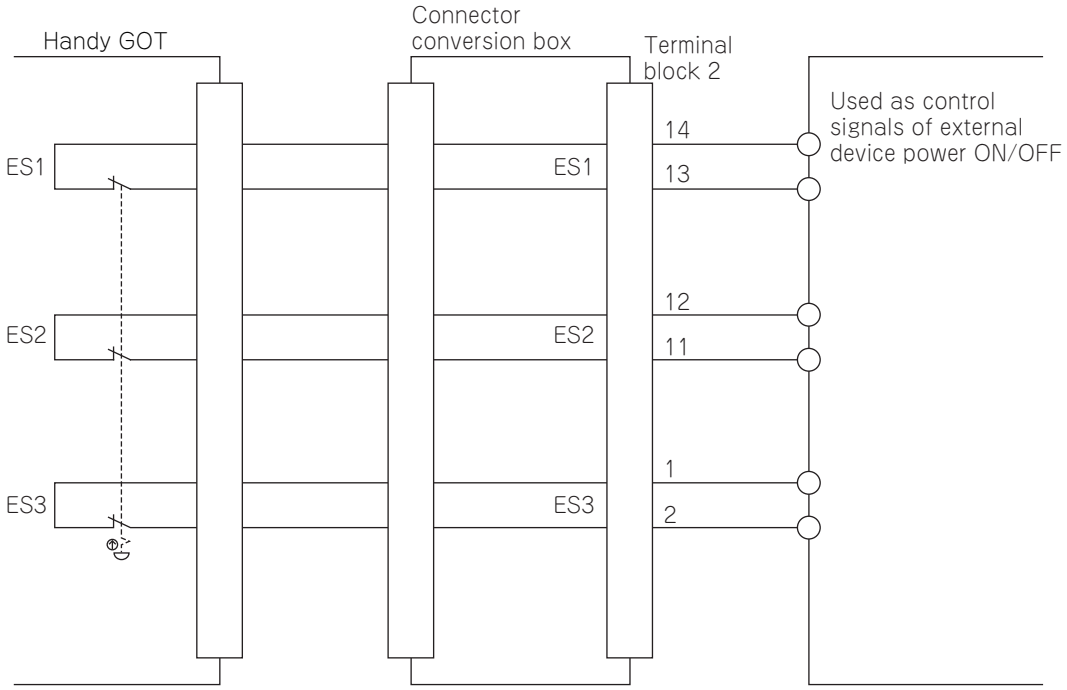

■When avoiding to set the connector conversion box not to the emergency stop state while Handy GOT is removed

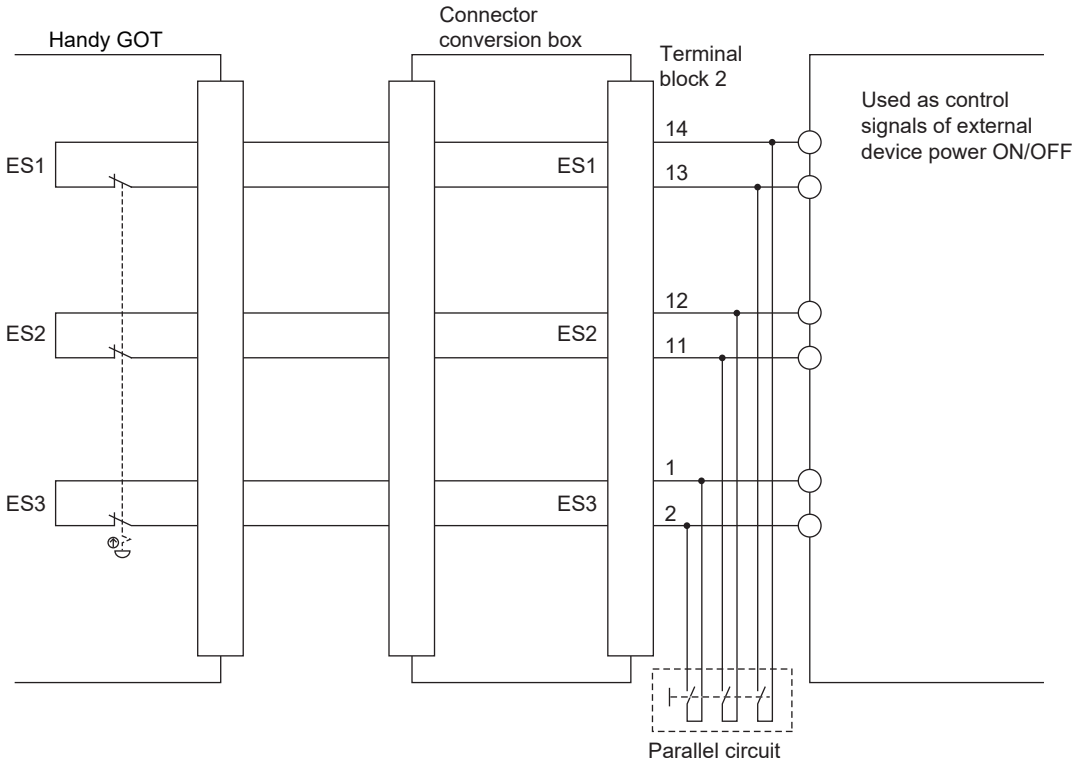

Pin layout

Product name	Model	Terminal No.									
		ES1A or ES1		ES1B		ES2A or ES2		ES2B		ES3A or ES3		ES3B	
Connector conversion box	GT16H-CNB-42S	Terminal block 1		Terminal block 1		Terminal block 1		Terminal block 1		Terminal block 1		Terminal block 1	
		20	19	18	17	16	15	14	13	12	11	10	9
	GT11H-CNB-37S GT16H-CNB-37S	Terminal block 2		-		Terminal block 2		-		Terminal block 2		-	
		13	14			11	12			1	2		

Point

Precautions when using the emergency stop switch

When using the emergency stop switch of the Handy GOT, use the emergency stop switch according to your risk assessment.

When using the parallel circuit (which sets the connector conversion box to the emergency stop status while Handy GOT is removed), the system may not match the safety standards.

Before using the system, please check the safety standards which are required.

If a shock which exceeds the general specifications of the Handy GOT is applied, a chattering may occur in the emergency stop switch due to the structure of the switch. Check your usage condition and decide whether to use or not.

Grip switch

The grip switch is on the side surface of the Handy GOT and wired to the input of PLC, etc.

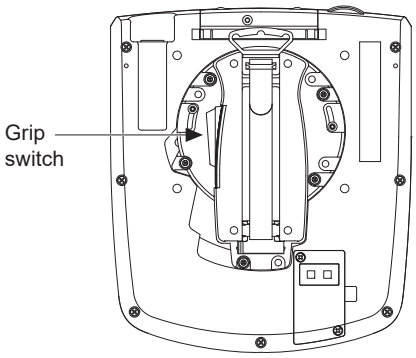

GT2506HS-V

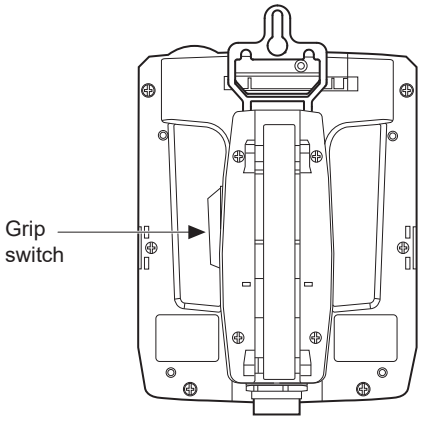

GT2505HS-V

The grip switch is the 3-position system switch and makes the ON/OFF state of Handy GOT as shown below.

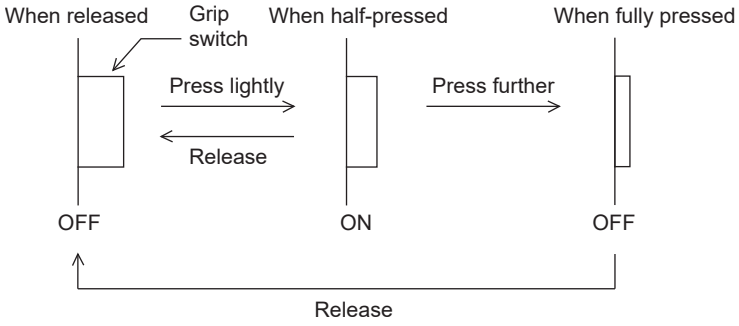

Grip switch wiring

The grip switch is a switch with two circuits of the above 3-position system a contact.

Connection example

■When using the connector conversion box (GT16H-CNB-42S)

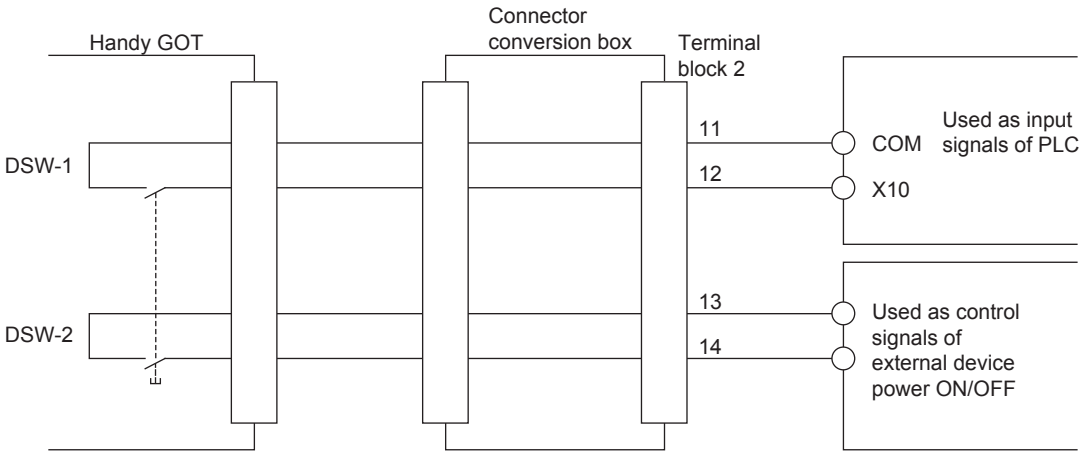

Set the load up to 24VDC/1A (contact specification) for each contact.

■When using the connector conversion box (GT11H-CNB-37S or GT16H-CNB-37S)

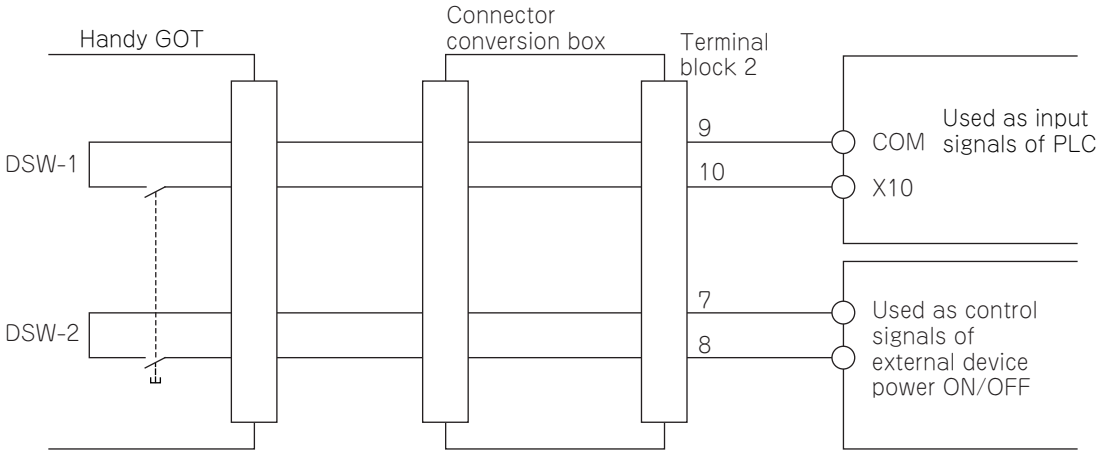

Set the load up to 24VDC/1A (contact specification) for each contact.

Pin layout

Model name		Terminal No.			
		DSW-1	DSW-1	DSW-2	DSW-2
Connector conversion box	GT16H-CNB-42S	Terminal block 2 11	Terminal block 2 12	Terminal block 2 13	Terminal block 2 14
	GT11H-CNB-37S GT16H-CNB-37S	Terminal block 2 9	Terminal block 2 10	Terminal block 2 7	Terminal block 2 8

LED settings of grip switch

Grip switches (DSW1, DSW2) contain green LED for checking operation.
The grip switch LED coordinates with b6 of the external input and output function/output information (read device +1) and operates the LED ON/OFF display.

Allocation of device to control LED

The device to control LED is allocated by the drawing software.
The external input and output function/output information (read device +1) set in [read device] of [system information function] in the [common settings] is allocated to the LED control.
The LED control for the grip switch is allocated to b6 (7th bit from the lower) of the device allocated to the external input and output function/output information.
The LED is lit when the bit value is 1 and notlit when the bit value is 0.
External input and output function/output information (read device +1)

b15	b14	b13	b12	b11	b10	b9	b8	b7	b6	b5	b4	b3	b2	b1	b0
									Grip switch						

For example, when D100 is set in the read device of system information, the value in b6 of D101 is reflected to the LED lit/not lit.

Keylock switch (2-position SW)

The keylock switch (2-position SW) is used with wiring to the input of PLC

Connection example

The following shows a connection example where the notch of the switch is set to the left.

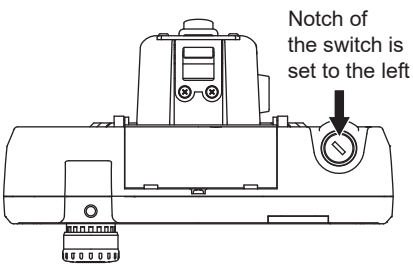

GT2506HS-V

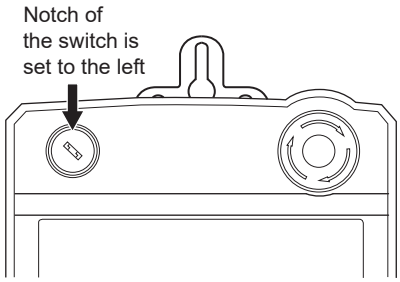

GT2505HS-V

Set the load up to 24VDC/1A (contact specification) for each contact.

■When using the connector conversion box (GT16H-CNB-42S)

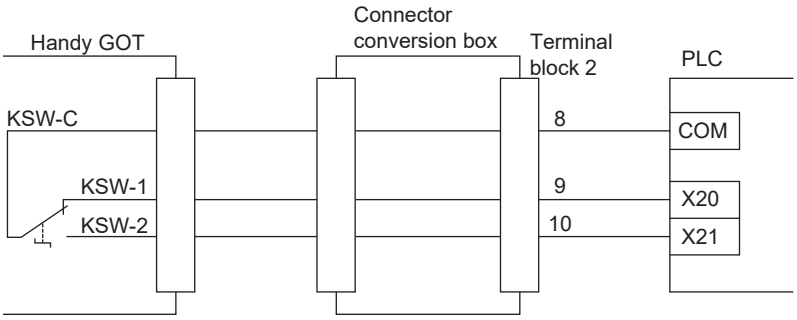

■When using the connector conversion box (GT11H-CNB-37S or GT16H-CNB-37S)

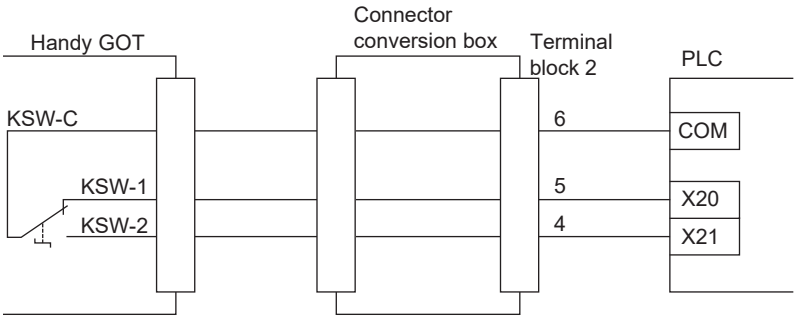

Pin layout

Model name		Terminal No.		
		KSW-C	KSW-1	KSW-2
Connector conversion box	GT16H-CNB-42S	Terminal block 2 8	Terminal block 2 9	Terminal block 2 10
	GT11H-CNB-37S GT16H-CNB-37S	Terminal block 2 6	Terminal block 2 5	Terminal block 2 4

10 OPERATING THE GOT

- Page 361 Outline Procedure to Start the GOT
- Page 364 Creating Project Data

10.1 Outline Procedure to Start the GOT

This section explains the outline procedure to operate the GOT.

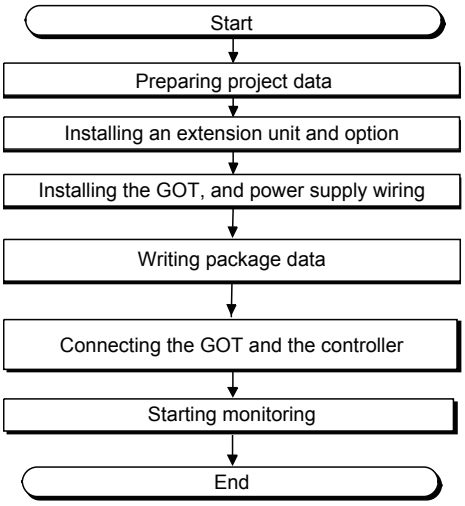

Preparing project data

1. Install GT Designer3 Version1 on the personal computer.

For how to install GT Designer3 Version1, refer to the following.

📖GT Works3 Version1 Installation Instructions

2. Create project data with GT Designer3 Version1.

For how to use GT Designer3 Version1 and create project data, refer to the following.

📖GT Designer3 (GOT2000) Screen Design Manual

Installing an extension unit and option

1. Install options other than the SD card and USB memory to the GOT.

For how to install options, refer to the following.

☞ Page 231 Installing the Battery
📖User's Manual of each option

2. Install an extension unit to the GOT.

For how to install extension units, refer to the following.

☞ Page 228 Installing and Removing the Extension Unit

Installing the GOT, and power supply wiring

1. Install the GOT to the control panel.

For how to install the GOT, refer to the following.

☞ Page 205 Installing the GOT

2. Carry out wiring of power cables for the GOT.

For the wiring of power cables, refer to the following.

☞ Page 323 WIRING OF POWER SUPPLY SECTION

Writing package data

Write package data with GT Designer3 Version1.

The writing procedure differs depending on the data writing method.

Point

Terms

• Basic software

The basic software is equivalent to an operating system of the GOT.

A GOT in which no basic software is written cannot be started.

• Package data

The package data contains project data and applications necessary to execute the project data.

Writing the package data into the GOT enables you to use the user-created project data on the GOT.

■Writing package data directly from a personal computer to the GOT

Connect the GOT and a personal computer, and write the package data to the GOT.

1. Connect the personal computer with the GOT.

USB:

Connect the USB interface (Device) and the USB port of the personal computer with a USB cable.

Ethernet:

Connect the Ethernet interface and the Ethernet port of the personal computer with an Ethernet cable.

To write the package data to the GOT by Ethernet, install the basic software to the GOT and configure the communication settings to enable the communication between the GOT and the personal computer by Ethernet in advance.

Via PLC (GT27, GT25 only):

Connect the GOT and a personal computer via the PLC connected to the GOT.

For each connection setting, refer to the following.

GT Designer3 (GOT2000) Screen Design Manual

2. Turn on the GOT.

3. Write the package data with GT Designer3 Version1.

For how to write the package data, refer to the following.

GT Designer3 (GOT2000) Screen Design Manual

■Writing package data from the data storage to the GOT

Write the package data to the GOT using the data storage such as an SD card.

1. Install a data storage such as an SD card to the personal computer.

2. Write the package data to the data storage with GT Designer3 Version1.

For how to write the package data, refer to the following.

GT Designer3 (GOT2000) Screen Design Manual

3. Install the data storage to the GOT.

SD card (drive A): installed to the SD card interface

Data storage (drive B, E, F, or G) (GT27, GT25 and GT23) should be installed to the USB interface (Host)

4. Turn on the GOT.

To start the GOT with the built-in flash memory (drive C), write the package data to the built-in flash memory (drive C) of the GOT.

For how to write the package data, refer to the following.

GOT2000 Series User's Manual (Utility)

To start the GOT with the data storage (drive A, B, D to G), writing the package data to the built-in flash memory (drive C) of the GOT is not required.

Connecting the GOT and the controller

1. Check the communication settings in the utility screen of the GOT.

GOT2000 Series User's Manual (Utility)

2. Turn off the power of the GOT.
3. Connect the GOT and controller with a cable.

GOT2000 Series Connection Manual For GT Works3 Version1 that covers the controller used

Starting monitoring

1. Turn on the GOT and the connected system.
2. The GOT starts monitoring.

Point

Precautions when the startup source of the GOT is any other than the built-in flash memory (drive C)

• GOT startup time

The GOT startup time is longer than the normal startup time.

The GOT startup time differs depending on the data storage type, number of written applications, and package data size.

• Handling the SD card during the GOT startup

When the startup source is the SD card (drive A), do not open the cover of the SD card interface during the GOT startup.

Doing so causes the GOT to fail to start normally.

• Corrective actions when the GOT cannot be started

The GOT cannot be started in any of the following conditions.

Take the following corrective actions, and turn on the GOT again.

Condition	Corrective action
The type of the physical GOT differs from the GOT type of the package data stored in the SD card.	Prepare the SD card that stores the package data containing the GOT type same as the GOT to be used.
The GOT has insufficient memory.	Delete unnecessary data in the memory of the GOT. ☞ GT Designer3 (GOT2000) Screen Design Manual

10.2 Creating Project Data

Create project data with GT Designer3 Version1.

For how to operate GT Designer3 Version1, refer to the following.

GT Designer3 (GOT2000) Screen Design Manual

Precautions for drawing

■Starting GT Designer3 Version1

When starting GT Designer3 Version1, make sure to start the GOT2000 application.

You cannot create the GOT2000 screens with the GOT1000 application.

11 MAINTENANCE AND INSPECTION

- Page 366 Daily Inspection
- Page 367 Periodic Inspection
- Page 368 Screen Cleaning Method
- Page 369 Low-voltage Battery Detection and Battery Replacement

⚠WARNING

- When power is on, do not touch the terminals.
  Doing so can cause an electric shock or malfunction.
- Correctly connect the battery connector.
  Do not charge, disassemble, heat, short-circuit, solder, or throw the battery into the fire.
  Doing so will cause the battery to produce heat, explode, or ignite, resulting in injury and fire.
- Before starting cleaning or terminal screw retightening, always switch off the power externally in all phases.
  Not switching the power off in all phases can cause a unit failure or malfunction.
  Undertightening can cause a short circuit or malfunction.
  Overtightening can cause a short circuit or malfunction due to the damage of the screws or unit.

⚠CAUTION

- Do not disassemble or modify the unit.
  Doing so can cause a failure, malfunction, injury or fire.
- Do not touch the conductive and electronic parts of the unit directly.
  Doing so can cause a unit malfunction or failure.
- The cables connected to the unit must be run in ducts or clamped.
  Not doing so can cause the unit or cable to be damaged due to the dangling, motion or accidental pulling of the cables or can cause a malfunction due to a cable connection fault.
- When unplugging the cable connected to the unit, do not hold and pull from the cable portion.
  Doing so can cause the unit or cable to be damaged or can cause a malfunction due to a cable connection fault.
- Before touching the unit, always touch grounded metals, etc. to discharge static electricity from human body, etc.
  Not doing so can cause the unit to fail or malfunction.
- When disposing of this product, treat it as industrial waste.
  When disposing of batteries, separate them from other wastes according to the local regulations.
  (Refer to 9.4 Low-voltage Battery Detection and Battery Replacement for details of the battery directive in the EU member states.)

11.1 Daily Inspection

The GOT does not have consumable components that shorten its life.
However, the battery and liquid crystal display have limited life.
The periodical replacement of the battery is recommended.
For replacing the liquid crystal display, consult Mitsubishi Electric System & Service Co., Ltd.
For the battery and the liquid crystal display, refer to the following.
☞ Page 66 Performance Specifications

Daily inspection items

Item	Inspection item		Inspection method	Criterion	Corrective action
1)	GOT installation status		Check for loose screws.	Securely tightened	Retighten screws with the specified torque.
2)	Connection status	Loose terminal screws	Retighten screws with a screwdriver.	Not loose	Retighten terminal screws.
		Proximity of solderless terminals	Visual check	Proper intervals	Correct intervals.
		Loose contactors	Visual check	Not loose	Retighten contactor fixing screws.
3)	Usage status	Dirt on the protective sheet	Visual check	Not outstanding	Replace the sheet with a new sheet.
		Foreign material adherence	Visual check	No foreign matter adherence	Remove the foreign material and clean.

For the model of the protective sheet and the replacement procedure, refer to the following.
📖User's manual of the protective sheet

11.2 Periodic Inspection

Half-yearly or yearly inspection items

Inspect the following items when moving or modifying equipment, or changing wiring.

Item	Inspection item		Inspection method	Criterion		Corrective action
1	Surrounding environment	Ambient temperature	Measure corrosive gas with a thermometer or hygrometer.	Display section	0 °C to 40 °C	For use in a control panel, the control panel inside temperature is the ambient temperature.
				Other sections	*1	
		Ambient humidity		10 % RH to 90% RH		
		Atmosphere		No corrosive gas		
2	GOT with 100 V AC - 240 V AC power	Power supply voltage check	Measure voltage across the 100 V AC terminal to the 240 V AC terminal.	85 V AC to 242 V AC		Change the power supply.
	GOT with 24 V DC power	Input polarity of 24 V DC power	Measure voltage across 24 V DC terminals.	Connected according to terminal markings on the GOT power supply section		Change wiring.
3	Installation status	Looseness	Move the unit.	Mounted firmly		Retighten screws.
		Foreign material adherence	Visual check	No foreign matter adherence		Remove the foreign material and clean.
4	Connection status	Loose terminal screws	Retighten screws with a screwdriver.	Not loose		Retighten terminal screws.
		Proximity of solderless terminals	Visual check	Proper intervals		Correct intervals.
		Loose contactors	Visual check	Not loose		Retighten contactor fixing screws.
5	Battery		Check the voltage status of the GOT built-in battery in [Time] of the utility. 📖GOT2000 Series User's Manual (Utility)	No alarm		Replace the battery with a new battery when the current battery has reached the specified life span, even if the low voltage is not indicated.

*1 The criterion varies with the installation orientation.
For the details, refer to the following.
☞ Page 198 Control Panel Inside Temperature and GOT Installation Angle

11.3 Screen Cleaning Method

Use the GOT always in a clean condition.

Cleaning and disinfecting the GOT

- For your safety, be sure to turn off the GOT before cleaning and disinfecting the surface.
- Carefully wipe the GOT screen with a soft cloth moistened with neutral detergent or ethanol.

Do not apply too much disinfectant to the cloth.

If you use alcohol for disinfection, the main component of the alcohol must be ethanol or isopropyl alcohol.

- Do not spray disinfectant directly to the GOT because doing so may cause electrical failure of the GOT and peripheral devices.
- After wiping the surface, dry the GOT completely before turning it on.

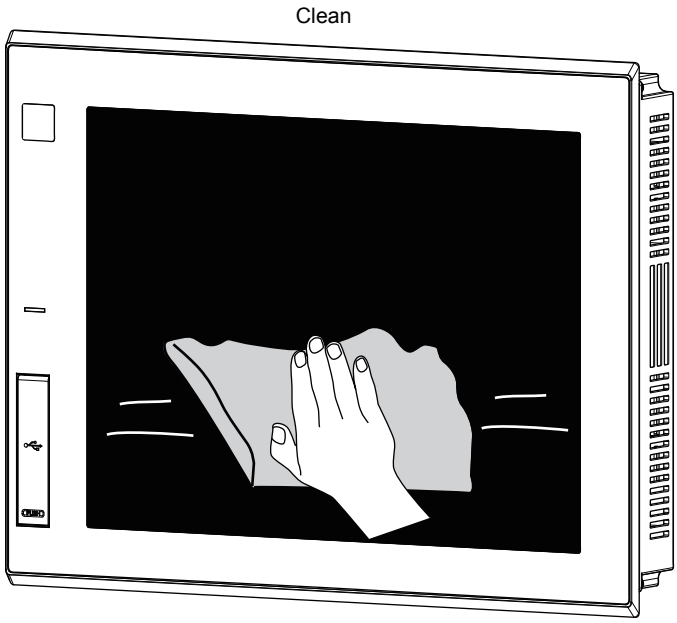

Precautions

Do not use the following solvents.

Solvents may cause the surface or protective sheet to deform, the surface to dissolve, or the paint to peel.

- Chlorine-based cleaners (bleach or other solvents)
- Peroxides (including hydrogen peroxide)
- Acetone, ammonia, paint thinner, benzene, methylene chloride, toluene, or other solvents

11.4 Low-voltage Battery Detection and Battery Replacement

Low-voltage battery detection and battery replacement

The battery is used to hold the SRAM data, clock data, and backup data of the system status log data.

The periodical replacement of the battery is recommended.

For the battery replacement procedure, refer to the following.

☞ Page 231 Installing the Battery

You can check if the battery has a low voltage by using the utility and the system alarm.

For details of the battery status display by using the utility, refer to the following.

📖GOT2000 Series User's Manual (Utility)

GT27, GT25 and GT23 can display a low battery voltage message with the system alarm on such an occasion.

To display the message by the system alarm, set [Battery alarm display] to ON.

📖GOT2000 Series User's Manual (Utility)

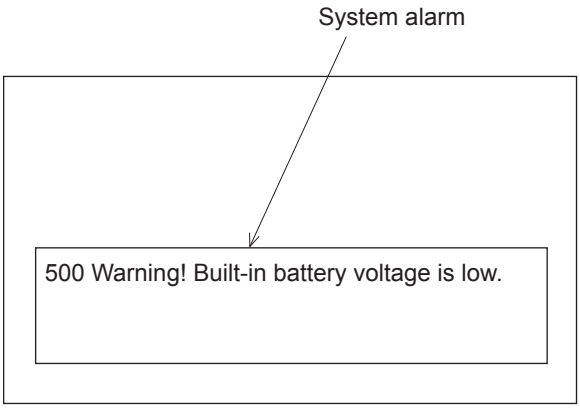

For the details of the system alarm, refer to the following.

📖GT Designer3 (GOT2000) Screen Design Manual

Point

Battery replacement timing

When a low-voltage battery is detected, replace the battery immediately.

The GOT retains the data for 14 days after the low-voltage battery detection. However, after the period, the GOT cannot retain the data.

Handling of batteries and devices with built-in batteries in EU member states

This section explains the precautions for disposing of waste batteries in EU member states and for exporting batteries and devices with built-in batteries to EU member states.

■Precautions for disposal

EU member states have a separate collection system for waste batteries.

Dispose of batteries properly at the local community waste collection/recycling center.

The following symbols are printed on batteries or packaging of devices with built-in batteries.

If any chemical symbol is printed under the symbol (1), it indicates that the battery contains heavy metals at or above the following concentrations.

- Hg: Mercury (0.0005%), Cd: Cadmium (0.002%), Pb: Lead (0.004%)

(1)



(2)



* The symbols on the left are specified according to the following:
  (1): New EU Battery Directive (2006/66/EC) (to be repealed on August 18, 2025)
  (1) and (2): EU Battery Regulation (EU 2023/1542)

■Precautions for export

When batteries are sold or exported to EU member states, the following measures are required.

- Displaying the symbols on the battery (or on the manual and packaging if not possible)
- Explaining the symbols in the manual

(1)Labelling the symbol

From August 18, 2024 onward, display the separate collection symbol and the CE mark on the battery or on the manual and packaging, as described in the disposal precautions, to comply with the EU Battery Regulation (EU 2023/1542).

When selling or exporting the product to EU member states before August 18, 2024, display the separated collection symbol on the product or packaging in accordance with the new EU Battery Directive (2006/66/EC).

(2) Adding an explanation of the symbol to the relevant manual

When exporting equipment incorporating this product to EU member states on/after August 18, 2024 and include a manual of the product, provide the latest version that has an explanation of the separate collection symbol and the CE mark.

If you do not include the manual or provide an old version, add an explanation of the symbols to the equipment manual.

Point

Batteries manufactured before the new EU Battery Directive (2006/66/EC) or EU Battery Regulation (EU 2023/1542) take effect are also subject to the restrictions.

12 TROUBLESHOOTING

- Page 371 GOT Restoration Sheets
- Page 383 Troubleshooting for the Bus Connection
- Page 386 Error Messages and System Alarms

12.1 GOT Restoration Sheets

This section provides check sheets for restoration in cases where the GOT does not operate normally.
The following explains how to use each sheet.

When the GOT does not operate or malfunctions (GOT status check sheet)

When the GOT does not operate or malfunctions, identify the cause of the malfunction using the GOT status check sheet, and take a corrective action.
When the GOT is restored, see the status for a while.

When the wiring needs to be improved (GOT installation status check sheet)

As a result of the GOT status check, if the cause of the malfunction or others is due to the noise generated by the GOT wiring status, take a corrective action for wiring by using the GOT installation status check sheet.
When the GOT is restored, see the status for a while.

When a corrective action other than the above is required (System configuration check sheet)

If a malfunction or others still occurs even after the above checks, fill out the system configuration check sheet with details about your system, and consult your local sales office.
When sending a faulty product, attach the GOT restoration sheets (GOT status check sheet, GOT installation status check sheet, and the system configuration check sheet) checked in this section.
Keep copies of the GOT restoration sheets.

GOT status check sheet

Check the GOT starting from GOT status.

Mark checkboxes that apply to the symptom of your GOT.

Proceed according to the corrective actions.

GOT status

■Check of failure frequency, such as the GOT does not operate and an error occurs on the screen

Check	Symptom	Cause	Corrective action
□	Always occurs.	Frequency: • Example: Once a month	Proceed to the following. ☞ Check of the displayed error code (system alarm)
□	Occurs sometimes.		

■Check of the displayed error code (system alarm)

Check	Symptom	Cause	Corrective action
□	Can be checked.	Error code (system alarm):	Take the corrective action for the error code (system alarm) or error message. If the status does not change with the corrective action, proceed to the following. ☞ Check of the POWER LED
□	Cannot be checked.	• Example: 460 Communication unit error	Proceed to the following. ☞ Check of the POWER LED

■Check of the POWER LED

Check	Symptom	Cause/status	Corrective action
□	Lit in blue. (GT27, GT25, GT23, and GT2105-Q)	The power is supplied normally.	Proceed to the following. ☞ Check of the screen display
□	Lit in orange. (GT27, GT25, GT23, and GT2105-Q)	Screen saving is being performed. When the read device of the system information was set, the device was turned on and the screen was switched to the forced screen saving status.	Check the setting of the read device. If no problem is found in the setting, proceed to the following. ☞ Check of the screen display
□	Blinking in orange and blue. (GT27, GT25, GT23, and GT2105-Q)	A backlight failure has occurred.	Proceed to the following. ☞ Faulty product investigation
□	Not lit	The power is not supplied.	Check if the power is supplied. If the GOT is not restored, proceed to the following. ☞ Faulty product investigation
		If the power is supplied, the GOT hardware may be faulty.	

■Check of the screen display

Check	Symptom	Cause/status	Corrective action
□	The screen is black.	The LCD or basic software may be faulty.	Perform the following in order. 1) Write the package data again. 2) Install the basic software again. If the GOT is not restored by the above operations, proceed to the following. ☞ Faulty product investigation
□	The screen is white.	The GOT hardware may be faulty.	Proceed to the following. ☞ Faulty product investigation
□	A line is displayed on the screen.	The GOT hardware may be faulty. Example: A vertical line is displayed. 	
□	Other faulty displays		
□	The screen freezes.	The screen display is not updated and operation is unavailable.	Proceed to the following. ☞ Check of buzzer sound

■Check of buzzer sound

Check	Symptom	Cause/status	Corrective action
□	No buzzer sound	—	Proceed to the following. ☞ Status of the GOT when it freezes (screen operation stopped)
□	Continues to beep randomly.	Buzzer sound: • Example: The rhythm repeats as three beeps, one beep, and two beeps.	
□	Continues to beep in a particular pattern.		
□	Beeps continuously.	When the read device of the system information was set, the device was turned on and the Buzzer Output signal was input.	Check the setting of the read device. If the Buzzer Output signal has no error, proceed to the following. ☞ Status of the GOT when it freezes (screen operation stopped)

Status of the GOT when it freezes (screen operation stopped)

■Check of switching to the utility screen

Check	Symptom	Cause/status	Corrective action
□	Possible	Error code (system alarm): • Example: 460 Communication unit error	When the system alarm display function can be used, take the action for the error code (system alarm) displayed. If the corrective action cannot be taken, proceed to the following. ☞ Executing the I/O check from the GOT utility
□	Impossible	The system alarm cannot be used.	Proceed to the following. ☞ Check of the objects that are not displayed on the monitor screen

■Executing the I/O check from the GOT utility

Check	Symptom	Cause/status	Corrective action
□	Communication error	Display details: • Example: A message indicating that the cause may be a connection error has been displayed.	Proceed to the following. ☞ Check of the objects that are not displayed on the monitor screen
□	No error	The hardware such as a communication interface has no error.	Proceed to the following. ☞ PLC status

■Check of the objects that are not displayed on the monitor screen

Check	Symptom	Cause/status	Corrective action
□	Found	Details: • Example: The numerical display object is not displayed.	Proceed to the following. ☞ PLC status
□	Not found		

PLC status

■PLC failure

Check	Symptom	Cause/status	Corrective action
□	Always occurs.	CONTROL-BUS. ERROR, SP. UNIT LAY. ERROR, or others is considered. Error code (system alarm): • Example: 1204 CPU H/W failure	Proceed to the following. ☞ Page 383 Troubleshooting for the Bus Connection
□	Occurs sometimes.	The PLC CPU may be affected by noise or the hardware may be faulty. Frequency: • Example: Once a month Error code (system alarm): • Example: 1204 CPU H/W failure	Proceed to the following. ☞ GOT restoration procedure
□	Operates normally.	—	

GOT restoration procedure

Follow the procedure below starting from 1), and check if the GOT is restored.

Perform the action in each check item and mark the corresponding checkbox.

If the GOT is restored, take the action after restoration.

If the GOT is not restored, proceed to the next check item.

No.	Check item	Check	Cause/status	Action after restoration
1)	Press the GOT reset switch. *1*3	□ Restored □ Not restored	If the GOT is restored by the operation on the left, a temporary malfunction or others due to noise is considered.	Perform the following. ☞ Page 376 GOT installation status check sheet
2)	Power on/off the GOT. *2*3	□ Restored □ Not restored		
3)	Reset or power on/off the PLC CPU.	□ Restored □ Not restored		
4)	Power on/off the GOT and PLC CPU simultaneously.	□ Restored □ Not restored		
5)	Connect the cable again.	□ Restored □ Not restored	If the GOT is restored by the operation on the left, the cable connection may be faulty.	Securely connect the cable. If an error occurs again, proceed to the following. ☞ Faulty product investigation
6)	Write the package data again.	□ Restored □ Not restored	If the GOT is restored by the operation on the left, data may have been destroyed by an action such as powering off the GOT during the package data writing or basic software installation.	Do not power off the GOT during data transfer. If an error occurs again, proceed to the following. ☞ Faulty product investigation
7)	Install the basic software again.	□ Restored □ Not restored		
8)	Take the preventive measures against noise, which is described in the following. ☞ Page 376 GOT installation status check sheet	□ Restored □ Not restored	A temporary malfunction or others due to noise is considered.	Perform the following. ☞ Page 376 GOT installation status check sheet
9)	Replace the unit.	□ Restored □ Not restored	If the GOT is restored by the operation on the left, the unit may has a hardware failure.	Install the failure unit to the GOT again to check that the unit causes the malfunction. After the check, proceed to the following. ☞ Faulty product investigation
10)	If the GOT is not restored by 1) to 9), proceed to the following. ☞ Faulty product investigation			

*1 Models other than GT23 are the targets.
The GOT reset switch does not operate when the bus connection is used.

*2 Models other than GT23 are the targets.
When using the bus connection, do not turn off and then on the GOT while the PLC power is on.
Make sure to turn off the PLC first, and turn off and then on the GOT.

*3 Models other than GT23 are the targets.
Powering off the GOT causes an error in the control station for the MELSECNET/H connection or in the master station for the CC-Link connection (intelligent device station).

Faulty product investigation

If you cannot restore the GOT, consult your local sales office.

Depending on the problem details, we may ask you to send the faulty product to us.

In that case, attach the GOT status check sheet, GOT installation status check sheet, and system configuration check sheet filled with details about your system.

GOT installation status check sheet

Check the installation status of your GOT regarding the following items.

☞ Control panel inside wiring

☞ Control panel outside wiring

☞ Wiring of the FG cable and power line for the GOT

☞ Measures against surge

☞ Installation status

☞ Grounding status of the control panel having the GOT

☞ Power supply system

Mark the checkboxes that apply to the current status, and take the relevant measures if necessary.

If the measures is taken, mark the checkbox of the effect.

Point

Each GOT has the following ground terminals.

- GT27 (except GT2705-V), GT25 (except GT25-W and GT2505-V), GT23: FG terminal and LG terminal
- GT2705-V, GT25-W, GT2505-V, GT21: FG terminal

Control panel inside wiring

■Current status

Check if power lines, such as power cables and servo amplifier driving cables, and communication cables, such as bus connection cables (except for GT23) and network cables, are mixed in the wiring duct inside the control panel.

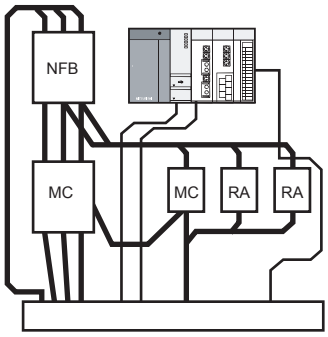

Check result

□ Mixed

□ Not mixed

■Measure for the mixed cables

Wiring the power lines and the communication cables inside the control panel without mixing them in the duct reduces the influence of noise.

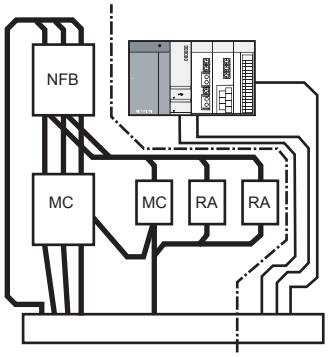

Effect

□ Effective

□ Ineffective

Control panel outside wiring

■Current status

Check if the power line and the communication cable are installed together.

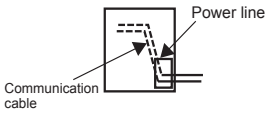

Check result

□ Installed together

□ Not installed together

■Measure for the cables tied in a bundle

As shown in the figure below, leading the power line and communication cable separately from different places to the outside of the control panel reduces the influence of noise from the power line.

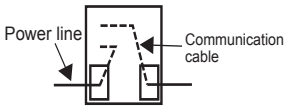

Effect

□ Effective

□ Ineffective

Separating the communication cable from the power line or using a separator (made of metal) in the duct, as shown below, reduces the influence of noise.

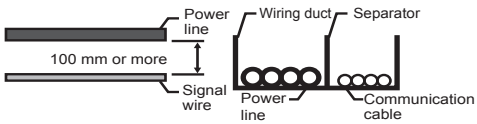

Effect

□ Effective

□ Ineffective

Wiring of the FG cable and power line for the GOT

■Current status

Check if the FG cable and power line of the GOT are installed together.

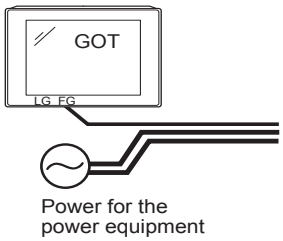

Check result

□ Installed together

□ Not installed together

■Measure for the cables tied in a bundle

Separating the FG cable and power line of the GOT reduces the influence of noise.

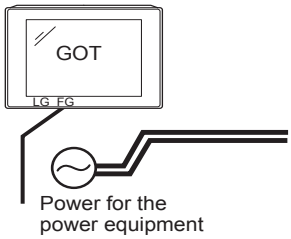

Effect

□ Effective

□ Ineffective

Measures against surge

■Current status

Check if a surge suppressor is used for the wiring of the load such as a molded case circuit breaker, electromagnetic contactor, relay, solenoid valve, or induction motor.

When a surge suppressor is used, enter the surge suppressor model and the name of the equipment that uses the surge suppressor in the columns.

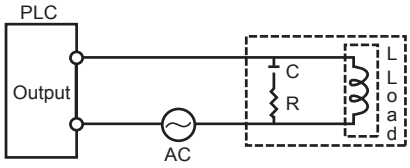

Check result

□ Used

□ Not used

• Entry column

Surge suppressor model	Equipment name

■Measure for the equipment without a surge suppressor

Attaching a surge suppressor close to the load reduces the influence of surge on the GOT.

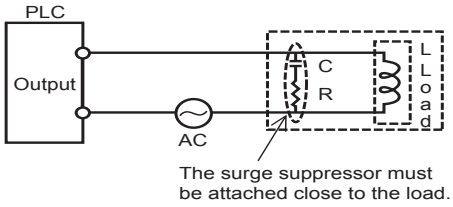

Effect

□ Effective

□ Ineffective

Installation status

■Current status

Check if the FG cables of the control equipment (such as a PLC) and the power equipment (such as a servo amplifier) are connected as shown in "a" of the following figure.

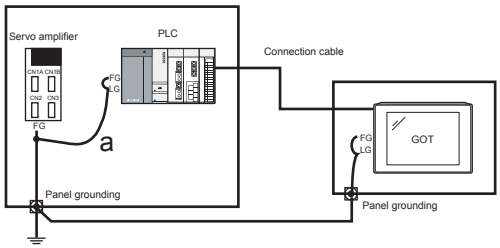

Check result

□ Applicable

□ Not applicable

■Measure when a single ground cable is led

Perform independent grounding at two places as shown in Figure A.

The independent grounding reduces the influence of noise.

When independent grounding is unavailable, perform shared grounding as shown in Figure B.

Figure A

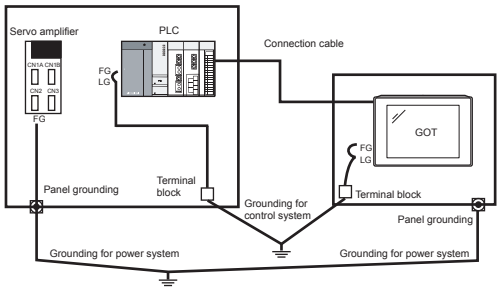

Figure B

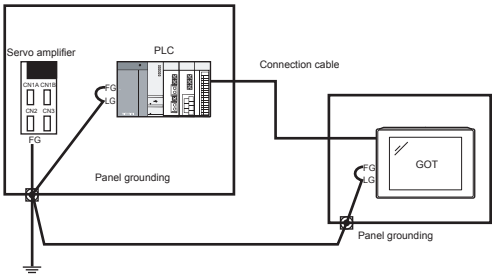

Effect

□ Effective

□ Ineffective

Grounding status of the control panel having the GOT

■Current status

Check if a single ground cable is led from the control panel having the control equipment such as a PLC to the control panel having the GOT.

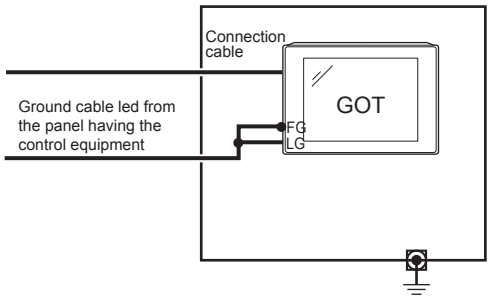

Check result

□ Applicable

□ Not applicable

■Measure when a single ground cable is led

• Measure 1

A malfunction may be prevented by connecting the ground cable to the control panel having the GOT as shown in Figure A to reduce the potential difference.

If wiring as shown in Figure A is unavailable, perform wiring as shown in Figure B.

Figure A

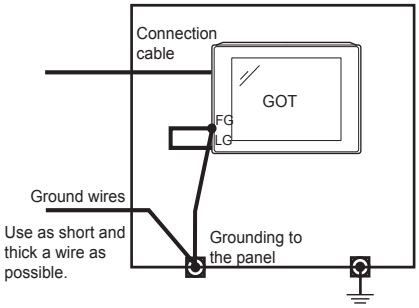

Figure B

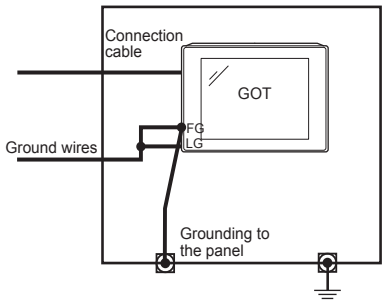

Effect

□ Effective

□ Ineffective

• Measure 2

By attaching a ferrite core (KITAGAWA INDUSTRIES CO.,LTD. RFC-H13 or equivalent) to the ground cable connected to the control panel having the GOT as shown in Figure C, the influence of noise is reduced.

If wiring as shown in Figure C is unavailable, perform wiring as shown in Figure D.

Figure C

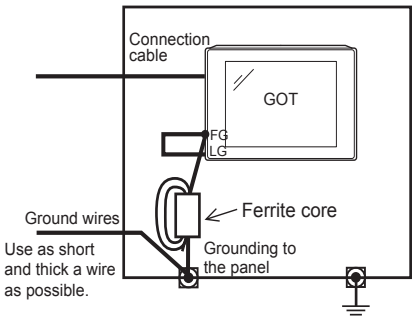

Figure D

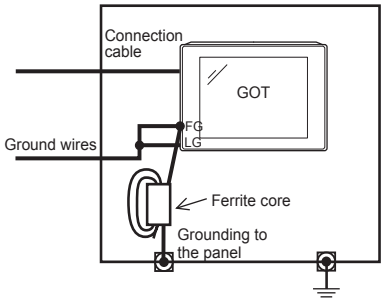

Effect

□ Effective

□ Ineffective

Power supply system

■Current status

Check if the power is supplied for the GOT, I/O equipment (such as a relay), and power equipment (such as a servo amplifier) from the same system.

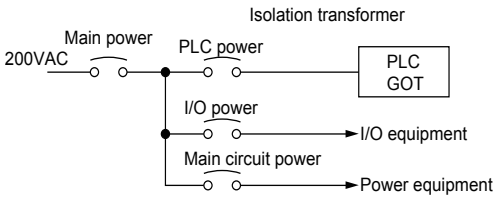

Check result

□ Applicable

□ Not applicable

■Measure when a single ground cable is led

By separately wiring the GOT power and the I/O equipment power/power equipment power, and connecting an isolation transformer, the influence of noise is reduced.

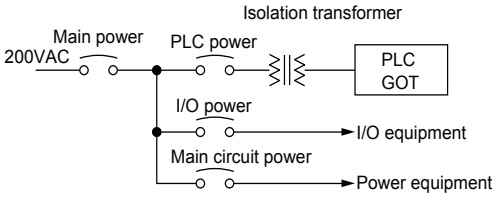

Effect

□ Effective

□ Ineffective

System configuration check sheet

Fill in the following table with the details of the system configuration, such as the GOT type and unit model.

System configuration for the GOT

Item		System configuration	
		Usage	Model
GOT (Example: GT2710-STBA)		—	
Communication interface	Communication unit	Used, Not used	
	GOT built-in interface	Used, Not used	
Option unit		Used, Not used	
Cable between the controller and GOT		—	
Cable length		—	
When using any other units or options, describe them.			

System configuration for the PLC

Item	System configuration	
	Usage	Model
Power supply module	—	
CPU	—	
Serial communication module Computer link module	Used, Not used	
Network module	Used, Not used	
Interrupt module	Used, Not used	
Positioning module	Used, Not used	
Number of PLC extension base units	—	extension base units
When using any other units or others, describe them.		

Entry column for recurrence (when the malfunction has occurred after the corrective action was taken)

Describe the operation situation when the GOT screen froze or the GOT display is faulty at the recurrence.

12.2 Troubleshooting for the Bus Connection

If an error occurs in the bus connection between the GOT and the PLC CPU and the cause is not clear with the system alarm, perform the troubleshooting described in this section.

For the details of the system alarm, refer to the following.

GOT2000 Series User's Manual (Utility)

For the details of the bus connection, refer to the following.

GOT2000 Series Connection Manual For GT Works3 Version1 that covers the controller used

Identifying the error position

This section explains how to identify the error position.

For the details of the PLC CPU error and special register, refer to the User's Manual of the PLC CPU used.

How to identify the error position

Identify the error position, modify the sequence program or replace the module where the error occurs, and check whether the error occurs again.

If the error occurs again, other causes are considered.

Refer to the following to narrow possible error positions.

Refer to the User's Manual of the PLC CPU you use.

■Checking the error in the PLC

1. Check the type of the error detected in the PLC using GX Works2 or others.
2. Check each module and the installation and grounding status of the cables according to the error message on the PLC CPU.

■Checking the error occurrence timing

Check the timing of the error occurrence.

• An error occurs when the power is turned on or immediately after the PLC is reset.

The error may be detected in the initial process of the PLC CPU.

In this case, since the faulty module cannot be usually identified, set only the END instruction in the sequence program and remove the modules one by one.

When the error is eliminated after a specific module has been removed, the module may have caused the error.

• An error occurs after or several seconds after a specific operation.

The error may occur in the sequence program.

Check the error step where the error may occur and the sequence program in the step.

You can determine whether the whole sequence program has a problem by setting only the END instruction in the sequence program.

• An error occurs when a specific device operates.

A malfunction caused by noise is considered.

Check if any signal line such as a bus connection cable is not installed close to the operating device.

If the line is close to the device, keep a distance of 100 mm or more between the line and the device.

■Identifying the module where an error occurs

Identify the module where an error occurs using the PLC CPU error codes and special resister information.

Narrowing the possible error positions

If the system cannot be restored even though the module with an error is replaced, another module may cause the error. Disconnect the extension cables and bus connection cables in order, starting from the module at the end of the system, and check for the error.

The module, extension cable, or bus connection cable disconnected immediately before the error does not occur is considered to cause the error.

The following shows examples of narrowing possible error positions. (When QnASCPU and an extension base unit are used)

Example 1:

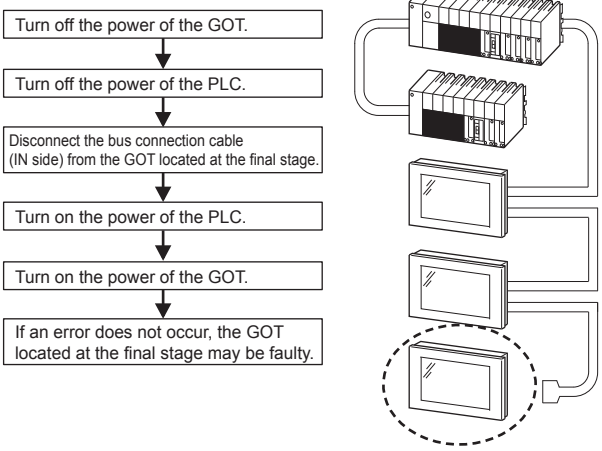

Example 2:

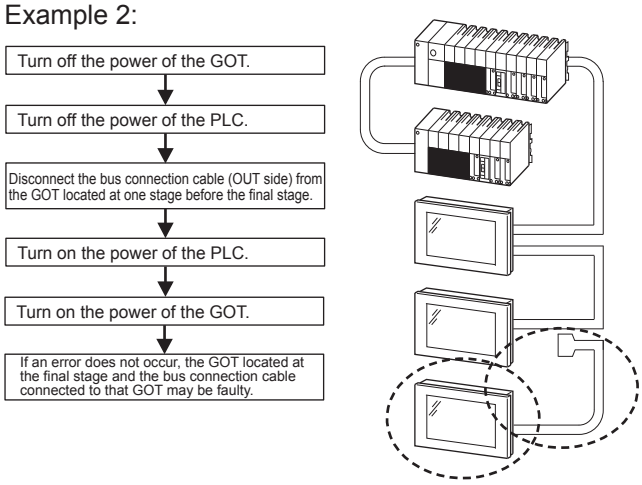

Repeat examples 1 and 2 above to identify the error position.

Point

Precautions for narrowing the possible error positions

When disconnecting the modules from the extension base unit in order, setting only the END instruction in the sequence program eliminates errors arising from the sequence program. Therefore, you can check the error occurrence easily.

When the error does not occur frequently, take time to check the error occurrence with the modules disconnected.

This check is effective to identify a noise invading route when the malfunction is caused by noise.

Specific example of troubleshooting

With the following system as an example, this section shows a troubleshooting when an error occurs in the PLC CPU. (When QnASCPU and an extension base unit are used)

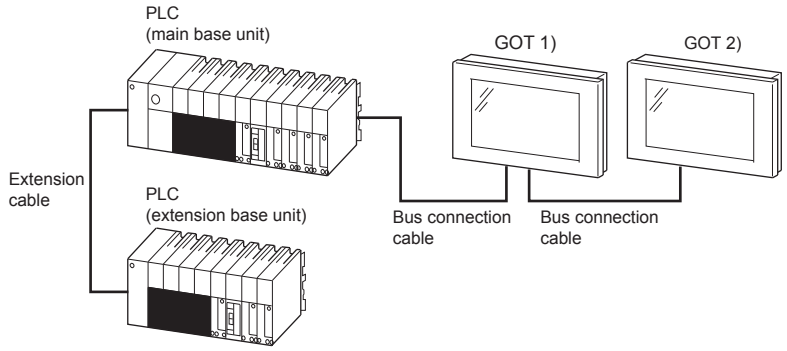

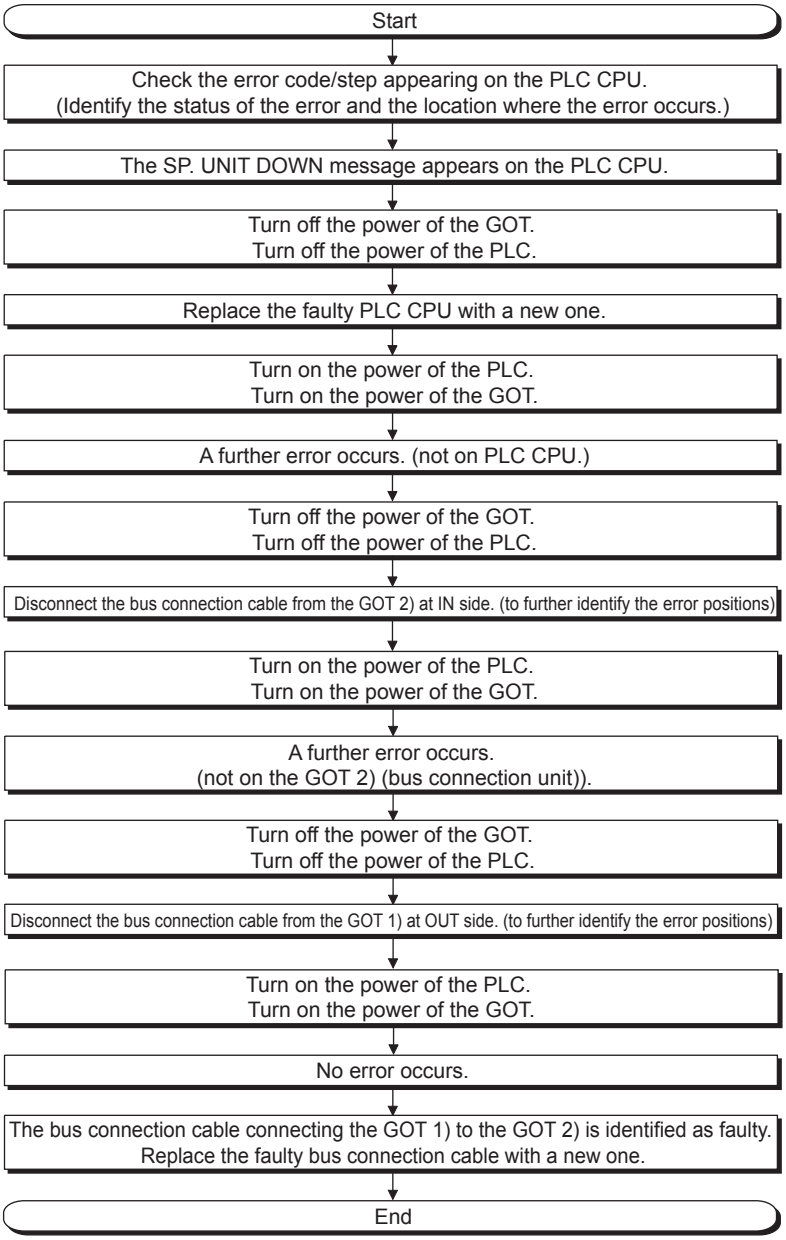

12.3 Error Messages and System Alarms

This section explains the error messages and system alarms displayed on the GOT.

The system alarm function displays the error code and error message when an error occurs in the GOT, controller, or network.

For the details of the system alarm, refer to the following.

GT Designer3 (GOT2000) Screen Design Manual

Point

Error code and channel No.

You can check error codes in the error code storage area of the system information function.

You can check the channel No. where an error occurs with the GOT special register (GS262 to 264).

For the details of the system information and GOT special register, refer to the following.

GT Designer3 (GOT2000) Screen Design Manual

Displayed contents

The section explains an example of displaying an error code and error message on the GOT.

Displaying the error codes and error messages with the popup display (Alarm popup display)

When an error occurs, the GOT can display the error code and error message with the popup display at the front of the monitor screen.

Since an alarm pops up regardless of the screen, you cannot miss the error.



Generated alarms are popped up regardless of the screen.

Displaying the error codes and error messages in a list (System alarm display)

When an error occurs, the GOT can display the error codes and error messages in the list set on the screen.

Displaying multiple errors and recording the events as history are available.

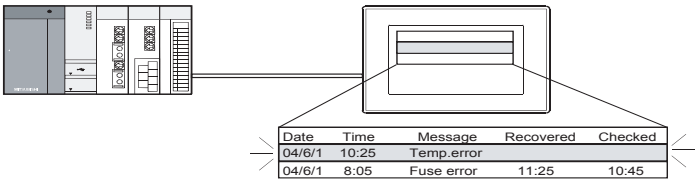

Create a screen to display alarms, and confirm the details of the alarms and take measures for the errors.

Checking error messages with the utility (Utility)

You can check the error codes and error messages using the system alarm display of the utility even though its object is not set.

GOT2000 Series User's Manual (Utility)

Error codes and reference manuals

Error source	Error code	Description	Storage location of channel No. with error *1	Reference
Controller	0 to 99 (Value of D9008)	Error code of CPU (ACPU)	GS263	User's Manual of the ACPU connected to the GOT
	100 to 299	Error code of the following controllers FXCPU *2 Non-Mitsubishi Electric PLC Temperature controller (OMRON temperature controller only)		Manual of the controller connected to the GOT Deal with errors according to the error messages.
GOT *5	300 to 399	Error code of the GOT main unit function	GS262 *4	GOT2000 Series User's Manual (Utility)
	400 to 499	Error code of the GOT communication function		
	500 to 699	Error code of the GOT main unit function		
Network	800 to 999	Error code of the network	GS264	
CPU	1000 to 10000 (Value of SD0)	Error code of the CPU (QCPU, LCPU, or QnACPU)	GS263	User's Manual of the QCPU, LCPU, or QnACPU connected to the GOT
		Error code of an RCPU or Motion CPU (MELSEC iQ-R series)		A system alarm message appears to indicate the code of the error occurring in an RCPU. For the displayed contents of the system alarms, refer to the following. GOT2000 Series User's Manual (Utility) For error handling, check the manual of the RCPU.
		Error code of an FX5CPU		A system alarm message appears to indicate the code of the error occurring in an FX5CPU. For the displayed contents of the system alarms, refer to the following. GOT2000 Series User's Manual (Utility) For error handling, check the manual of the FX5CPU.
Motion CPU	10001 to 10999	Error code of a Motion CPU (Q173D(S)CPU/Q172D(S)CPU/ Q170M(S)CPU)		*6
CNC C70	11000 to 11999	Error code of the CNC (Q173NCCPU)		*7
Robot controller	12000 to 12999	Error code of the robot controller		*8
CPU	15000 to 15999	Error code of an RCPU		*9
	16000	Error code of an FX5CPU		*10
Servo amplifier *3	20016 to 21121	Error code of the servo amplifier		User's Manual of the servo amplifier connected to the GOT

*1 For the details of the GOT special registers (GS262 to GS264), refer to the following.
GT Designer3 (GOT2000) Screen Design Manual

*2 FXCPU has error codes 100 to 109, indicating the status of M8060 to M8069.
(Example) If error code (100) occurs, handle the error according to the M8060 description.

*3 The GOT displays the error code displayed on the servo amplifier (hexadecimal) in decimal + 20000.
Therefore, when referring to the manual of the servo amplifier with the error code displayed on the GOT using the system alarm, subtract 20000 from the GOT error code and convert the last 3 digits into the hexadecimal number.
(Example: When the GOT system alarm shows 20144, the error code of the servo amplifier is 90H.)

*4 Depending on the error code, the channel No. is not stored.
For channel No. storage availability of each error code, refer to the following.
GT Designer3 (GOT2000) Screen Design Manual

*5 With the system alarm related to the file access, you cannot identify the drive where the alarm occurs. However, you can identify the drive by checking the File Access Error signal (b7 to b10) of System signal 2-2.

*6 The GOT displays the error code corresponding to an error occurring in the multiple CPU system.
Check the error details with MT Developer or MT Works2.
For error handling, refer to the manual of the Motion CPU.

*7 The GOT displays the error code corresponding to an error occurring in the multiple CPU system.
Check the error details with the CNC monitor.
For error handling, refer to the manual of the CNC.

*8 The GOT displays the error code corresponding to an error occurring in a robot controller in the multiple CPU system or a standalone robot controller.
Check the error details with RT ToolBox2 or RT ToolBox3.
For error handling, refer to the manual of the robot controller.

*9 The GOT displays the error code corresponding to an error occurring in an RCPU or Motion CPU (MELSEC iQ-R series).
Check the error details with GX Works3 or MT Works2.
For error handling, refer to the manual of the RCPU or Motion CPU (MELSEC iQ-R series).

*10 The GOT displays the error code corresponding to an error occurring in an FX5CPU.
Check the error details with GX Works3.
For error handling, refer to the manual of the FX5CPU.

Error messages and system alarms

For the details of the error messages and the system alarms displayed on the GOT, refer to the following.

GOT2000 Series User's Manual (Utility)

13 APPENDICES

- Page 390 External Dimension Diagrams
- Page 417 Cable Bend Radius for GT27 with an Extension Unit
- Page 422 Cable Bend Radius for GT25 with an Extension Unit
- Page 425 Depth Dimensions for the GOT with an SD Card Unit
- Page 426 Depth Dimensions for the GOT with Extension Units Mounted in Multiple Stages
- Page 428 External Dimension Diagrams of the Communication Cable
- Page 431 External Dimension Diagrams of the External Cable for Handy GOT
- Page 434 Confirming of Versions and Conforming Standards
- Page 435 Transportation Precautions
- Page 436 Calculating Consumed Current of GT2705-V
- Page 437 Open Source Software

13.1 External Dimension Diagrams

GT27

GT2715-X

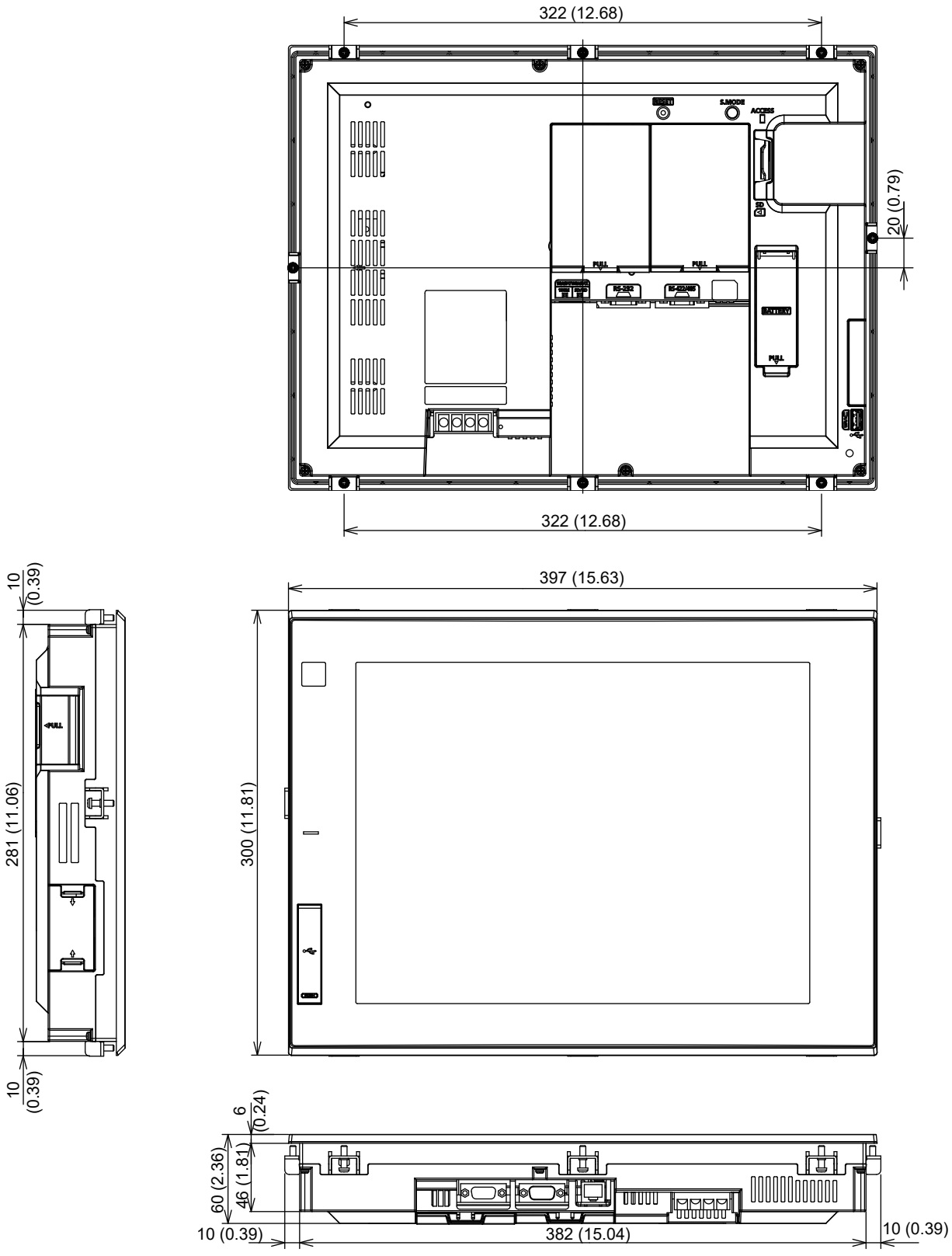

Unit: mm (inch)

GT2712-S

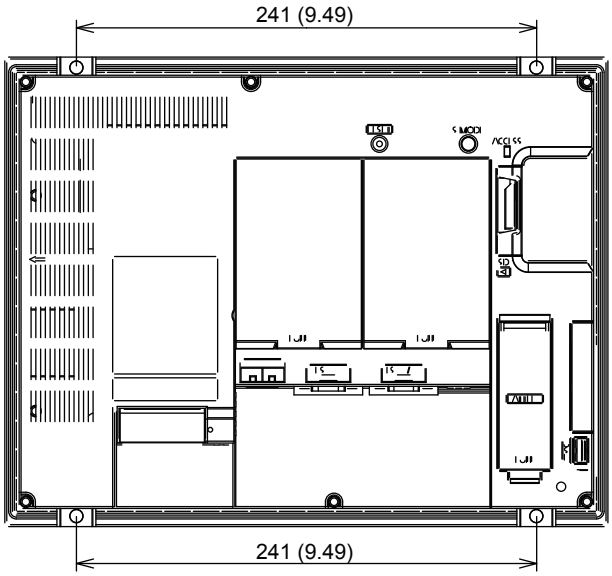

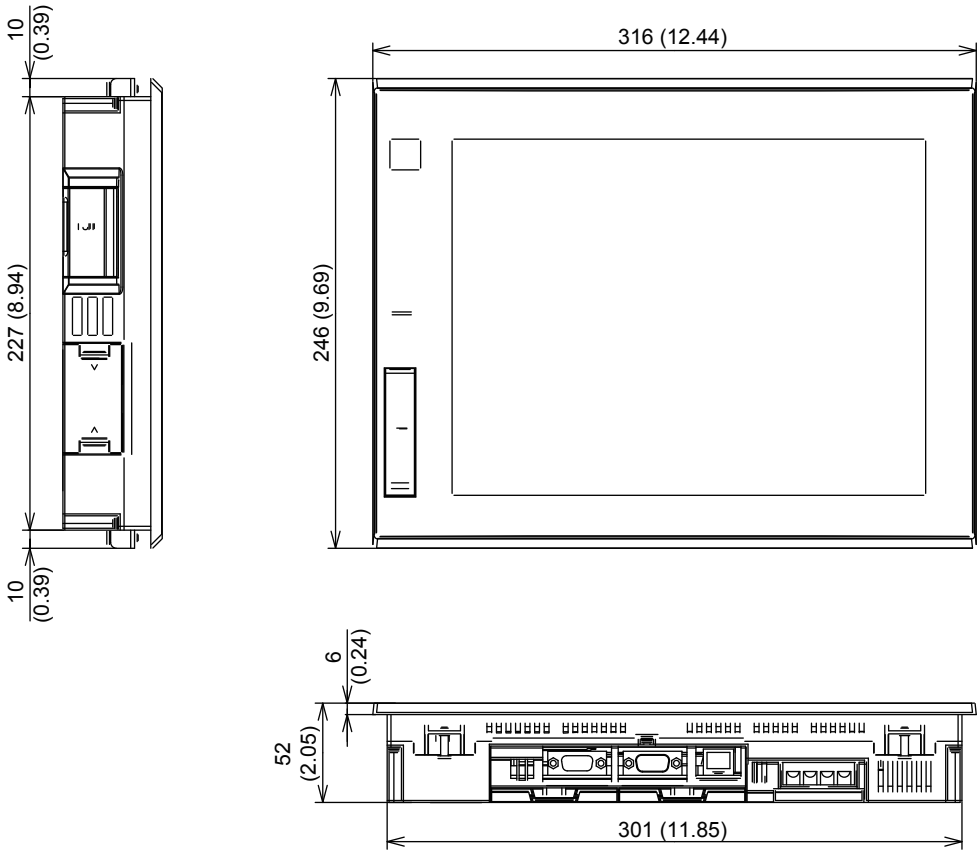

Unit: mm (inch)

GT2710-S, GT2710-V

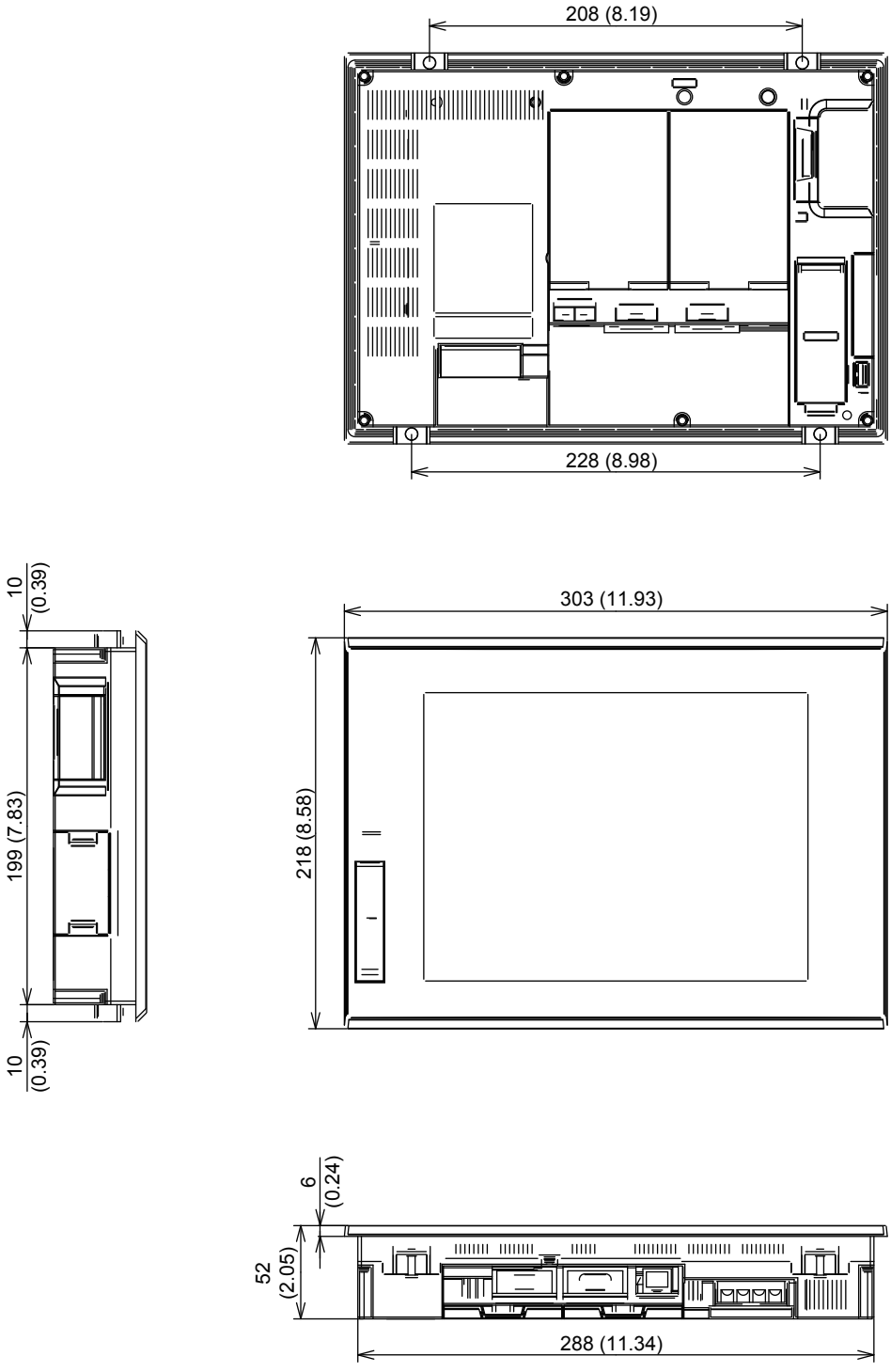

Unit: mm (inch)

GT2708-S, GT2708-V

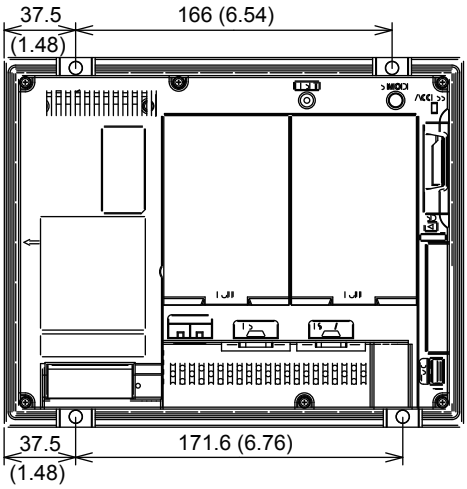

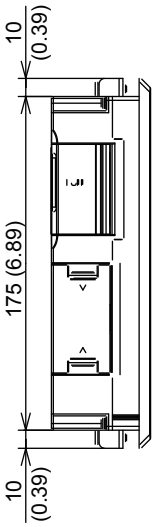

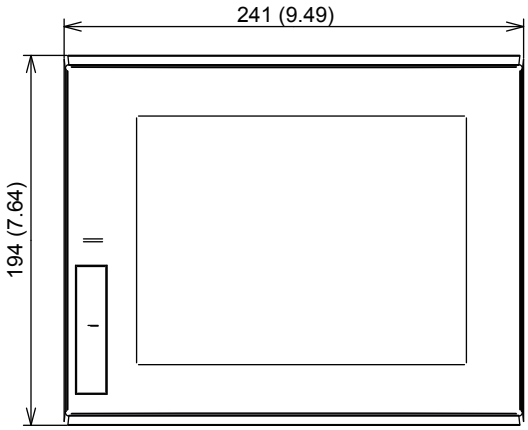

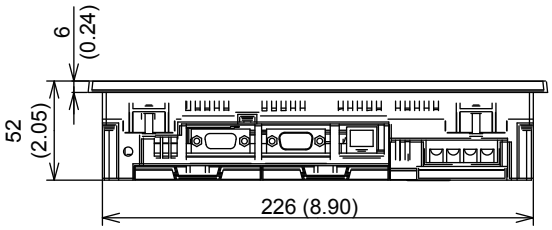

Unit: mm (inch)

GT2705-V

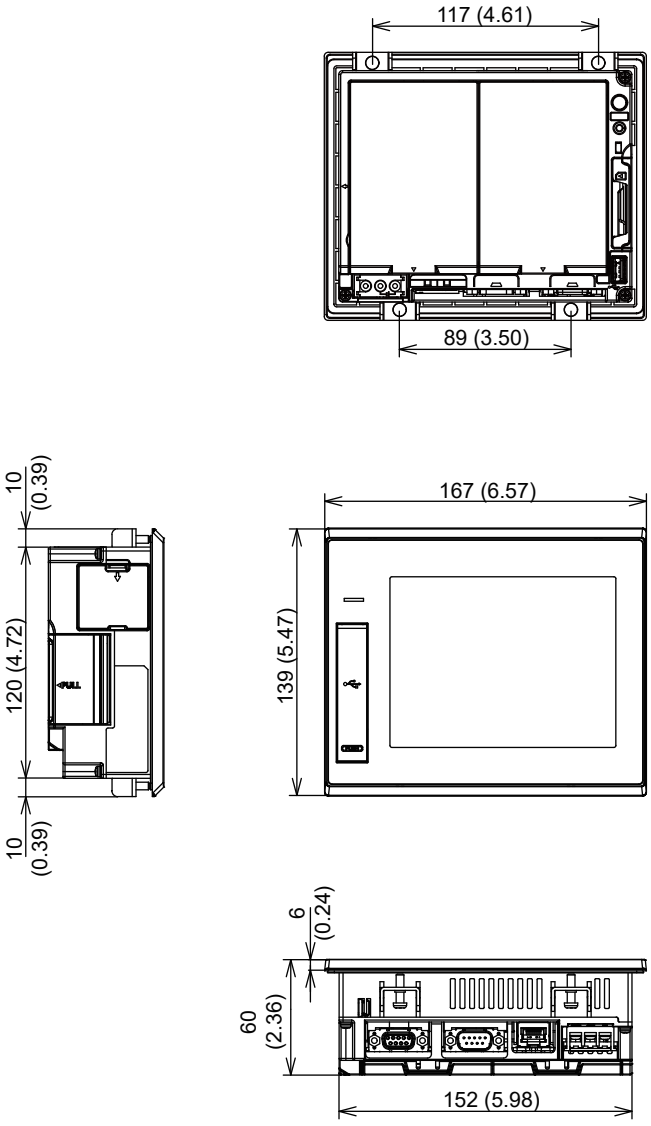

Unit: mm (inch)

GT2512-WX, GT2510-WX, GT2507-W

GT2512-WX

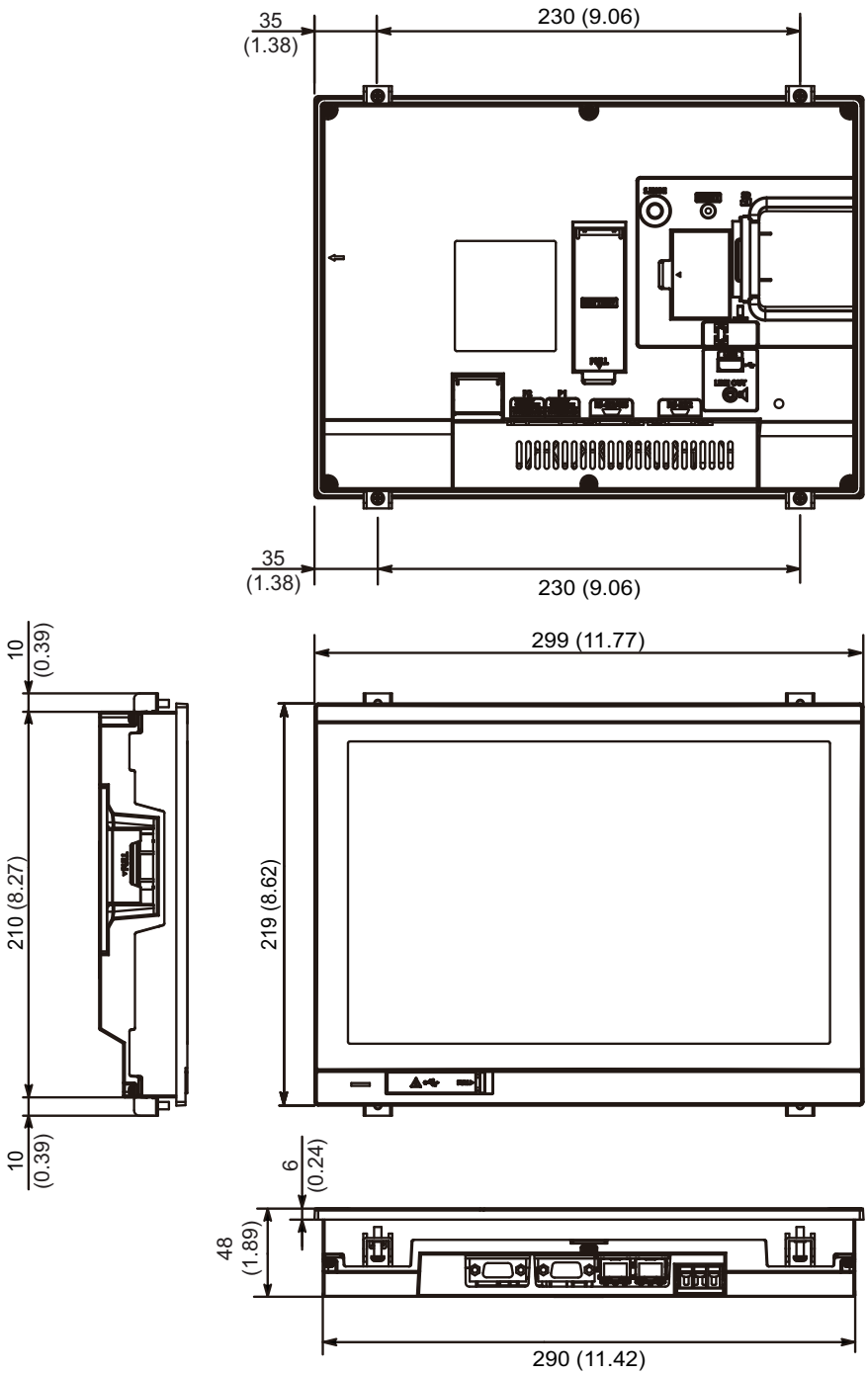

Unit: mm (inch)

GT2510-WX

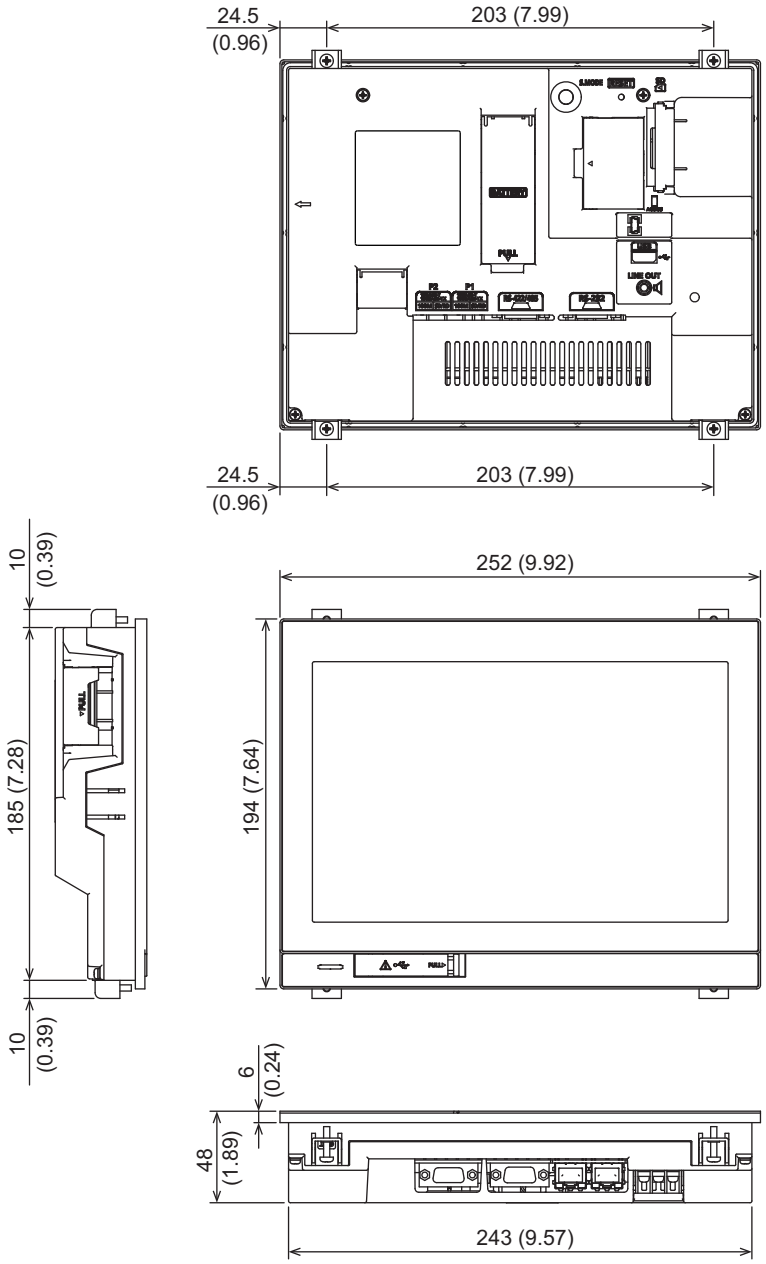

Unit: mm (inch)

GT2507-W

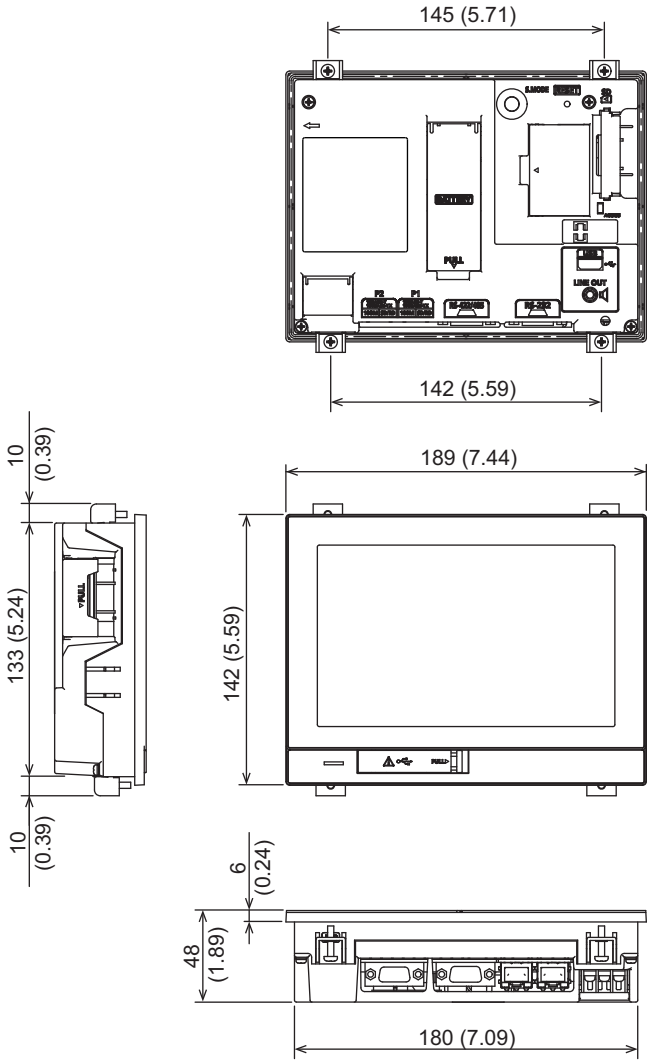

Unit: mm (inch)

GT2507T-W

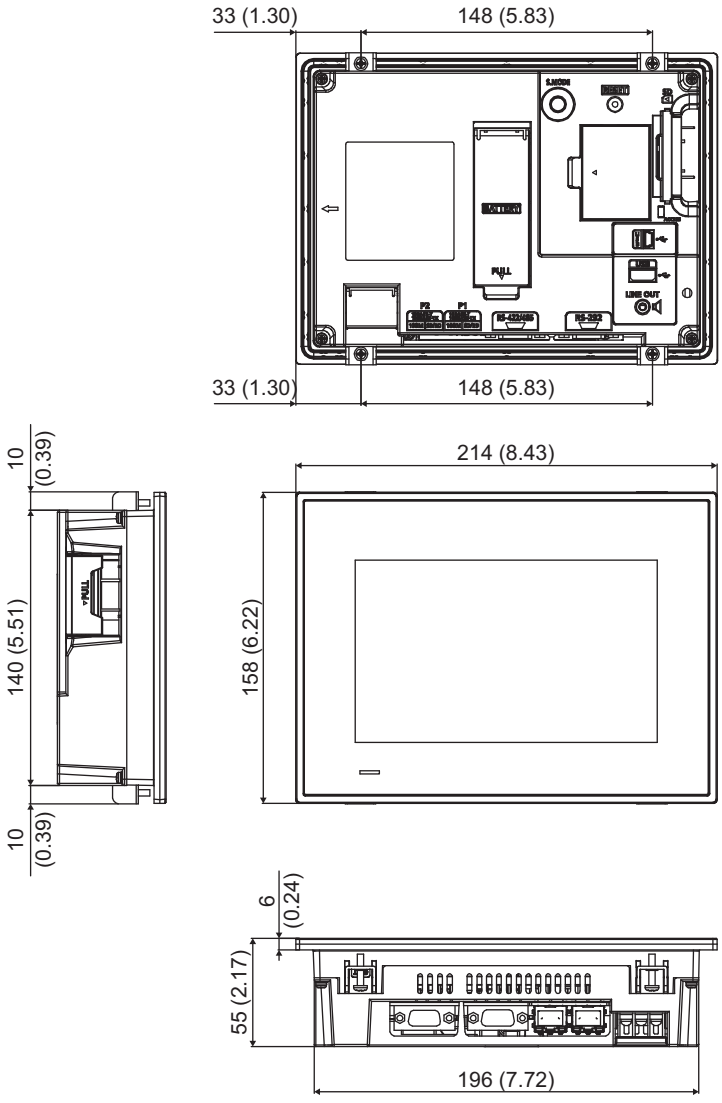

Unit: mm (inch)

GT2512-S

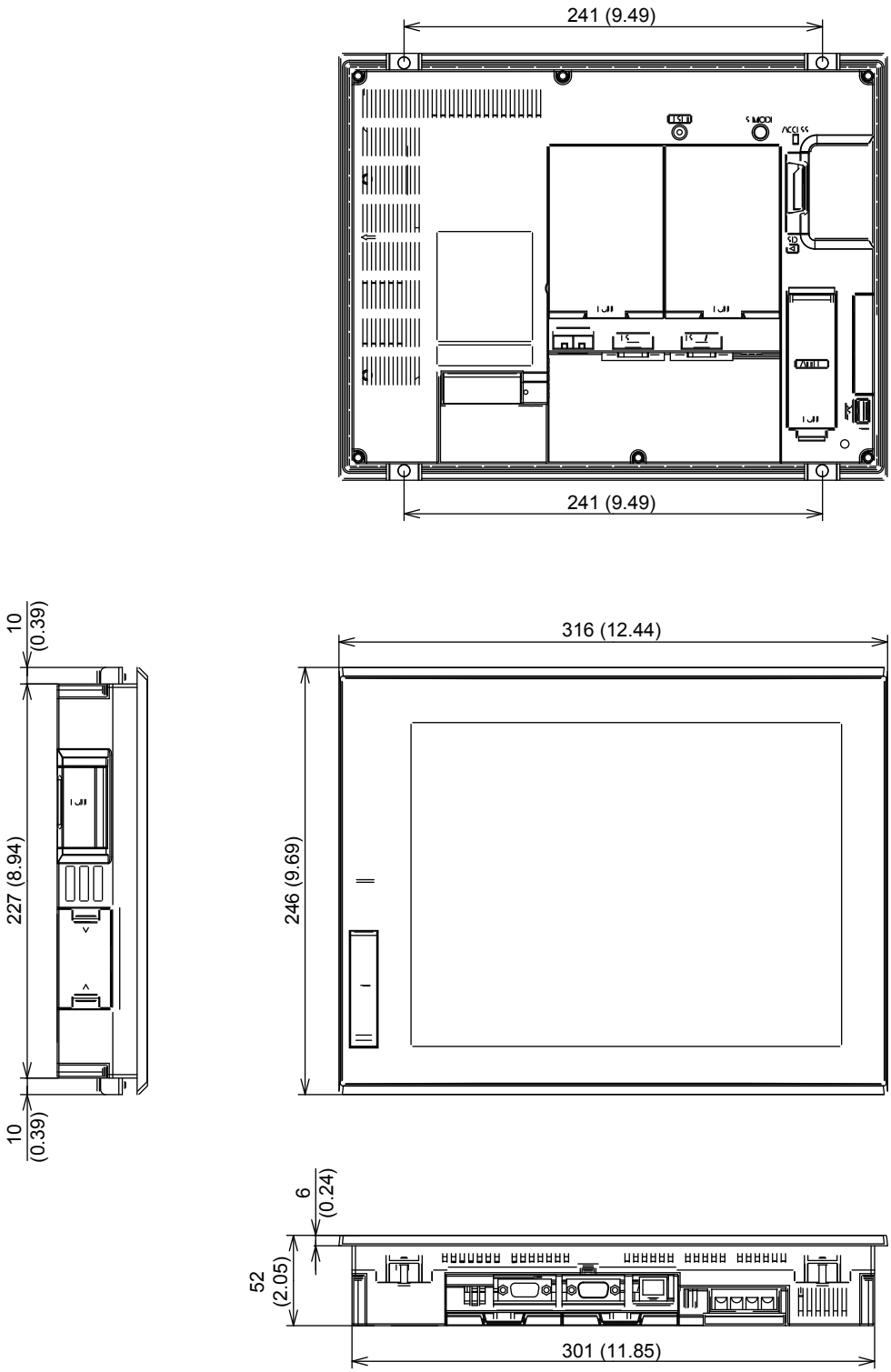

Unit: mm (inch)

GT2512F-S

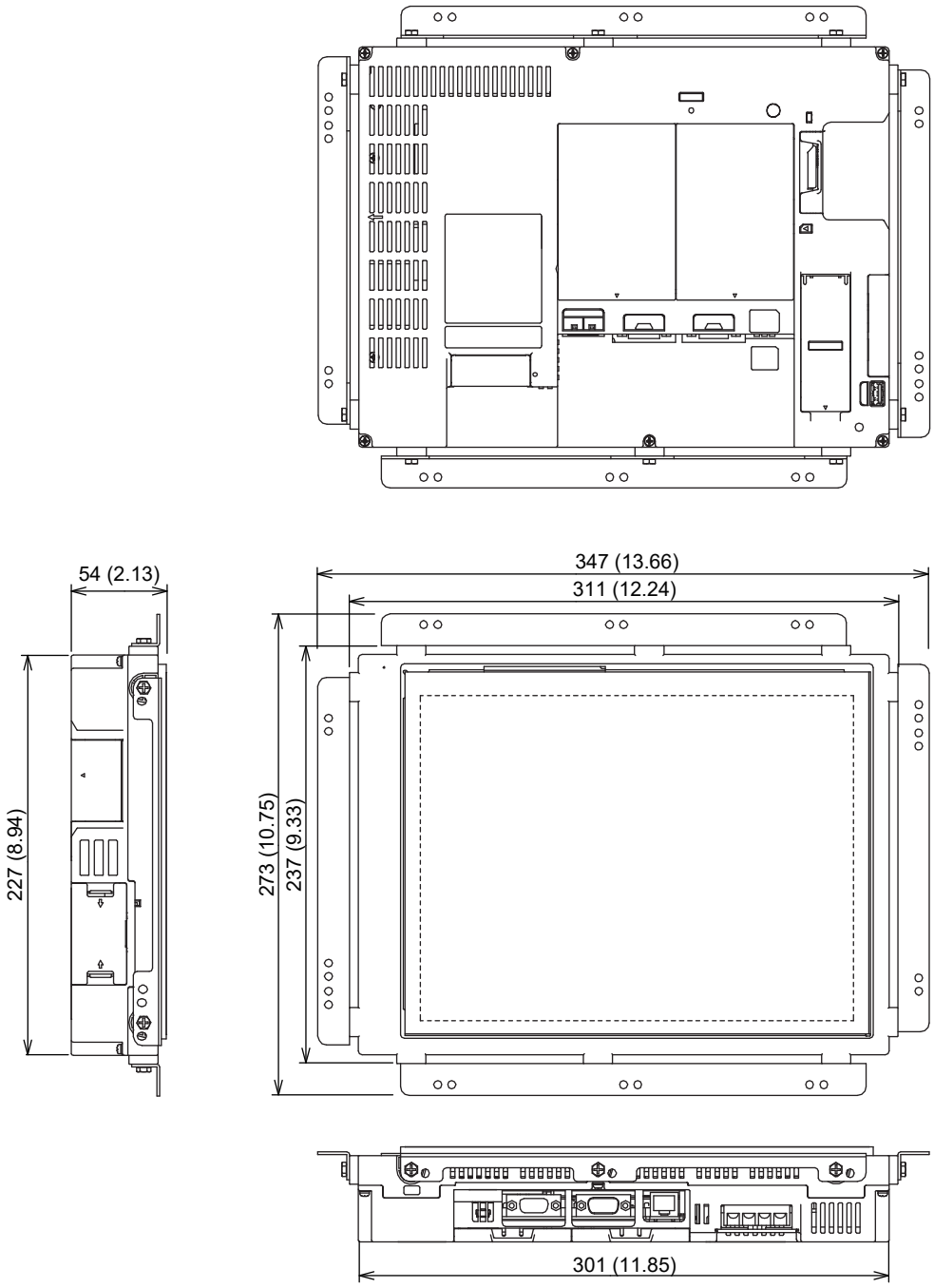

Unit: mm (inch)

The values indicate the dimensions when all the fittings are installed to the GOT.
Install the fittings on the top and bottom, or the right and left of the GOT.

GT2510-V

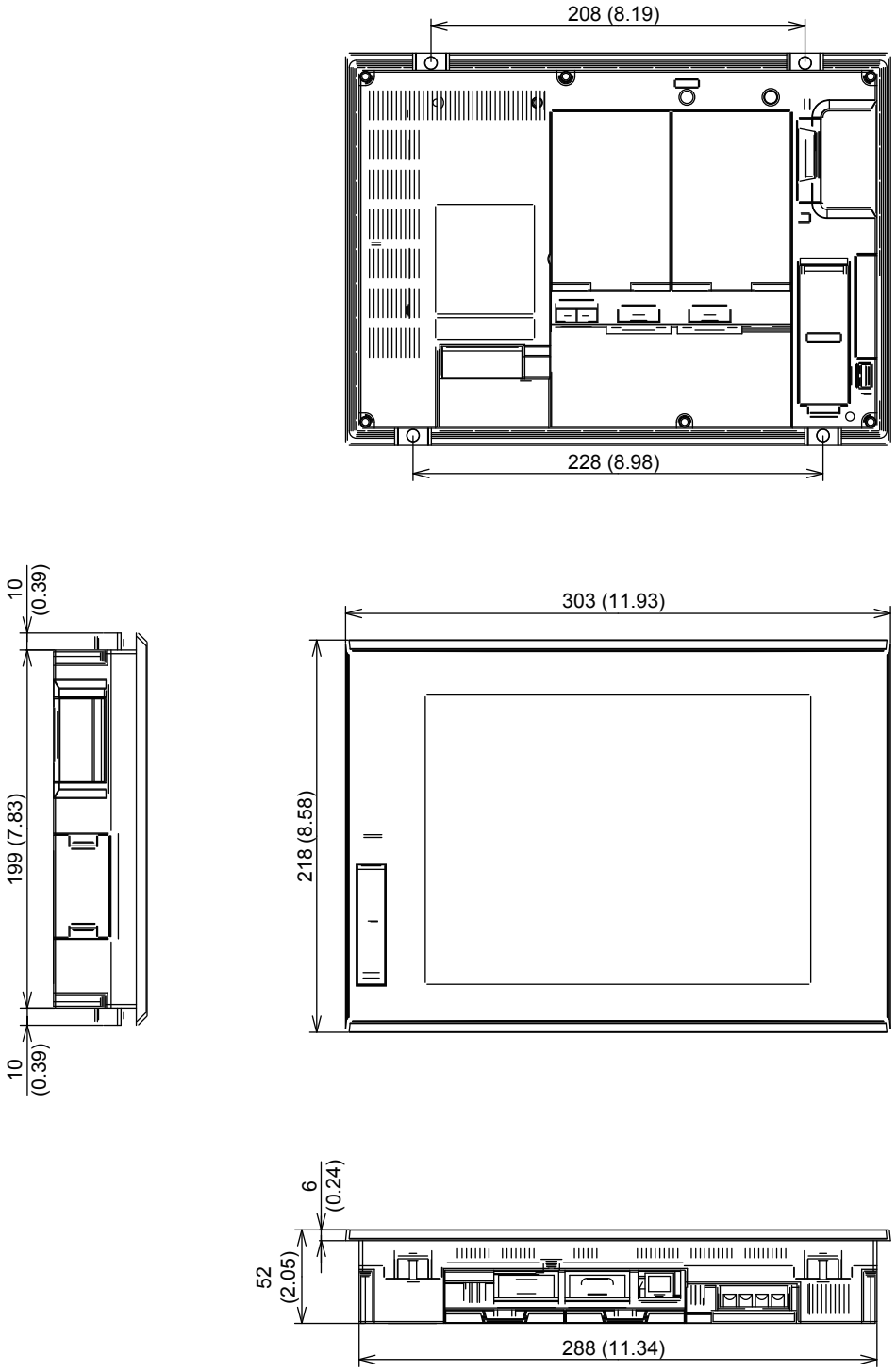

Unit: mm (inch)

GT2510F-V

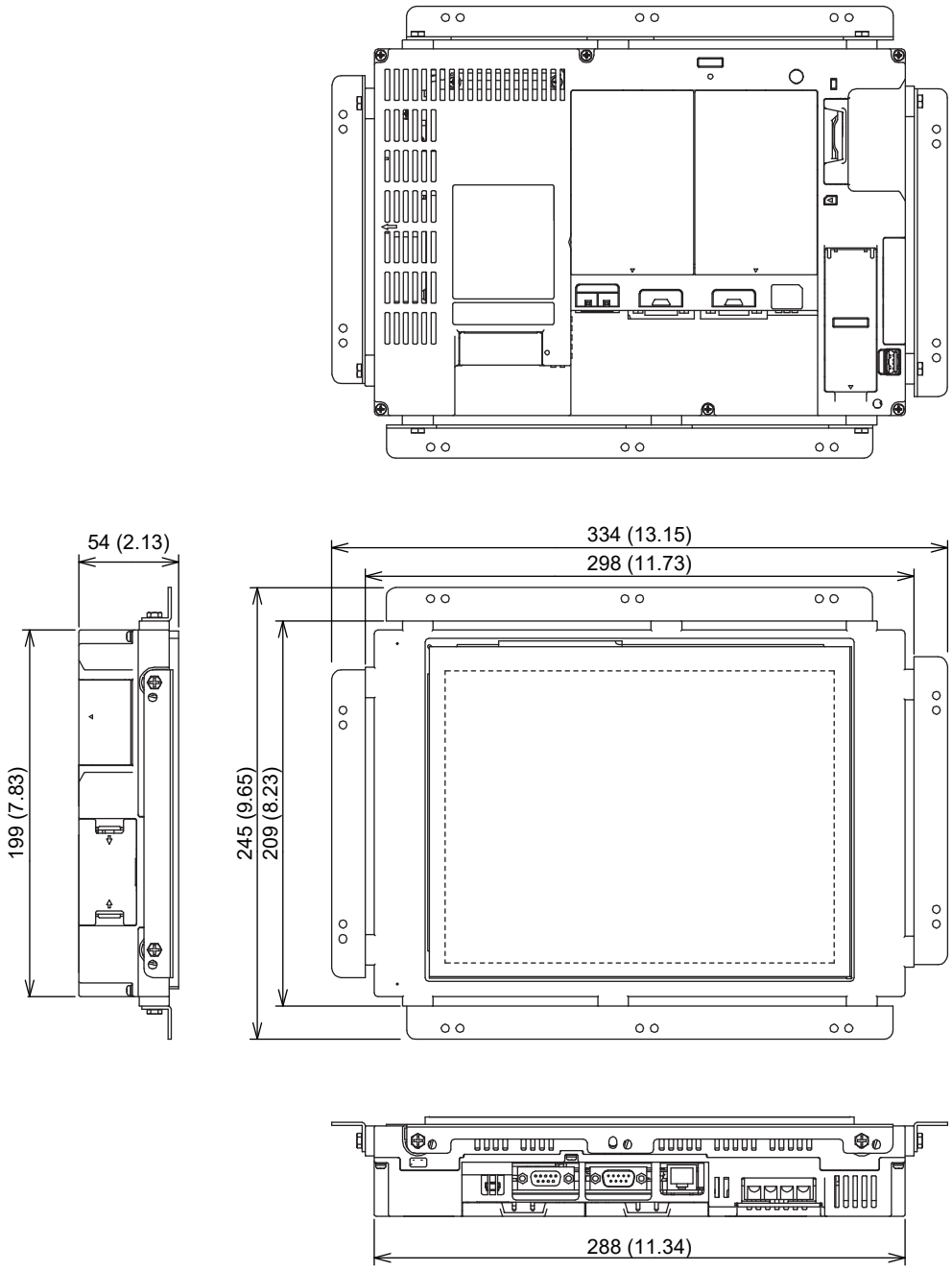

Unit: mm (inch)

The values indicate the dimensions when all the fittings are installed to the GOT.
Install the fittings on the top and bottom, or the right and left of the GOT.

GT2508-V

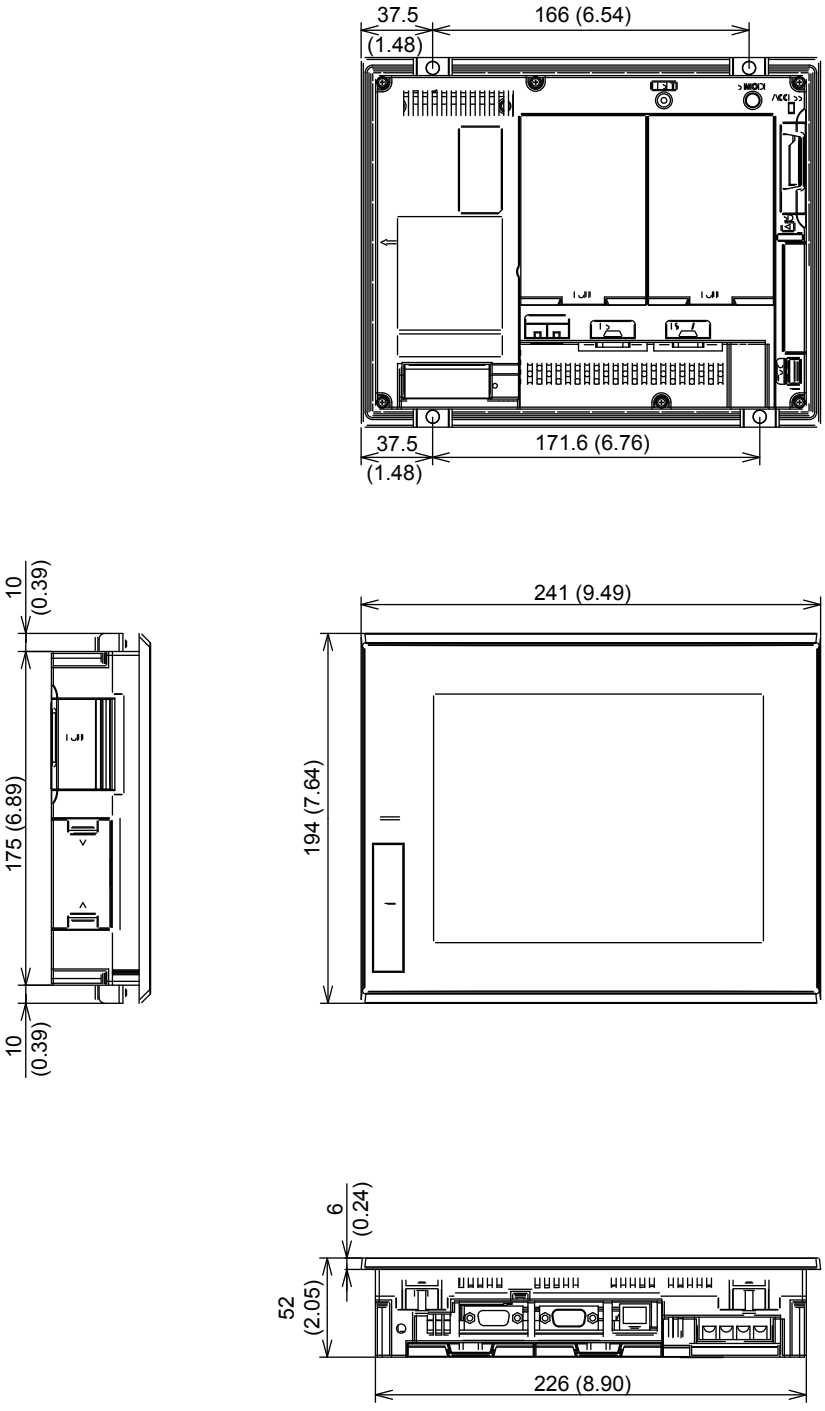

Unit: mm (inch)

GT2508F-V

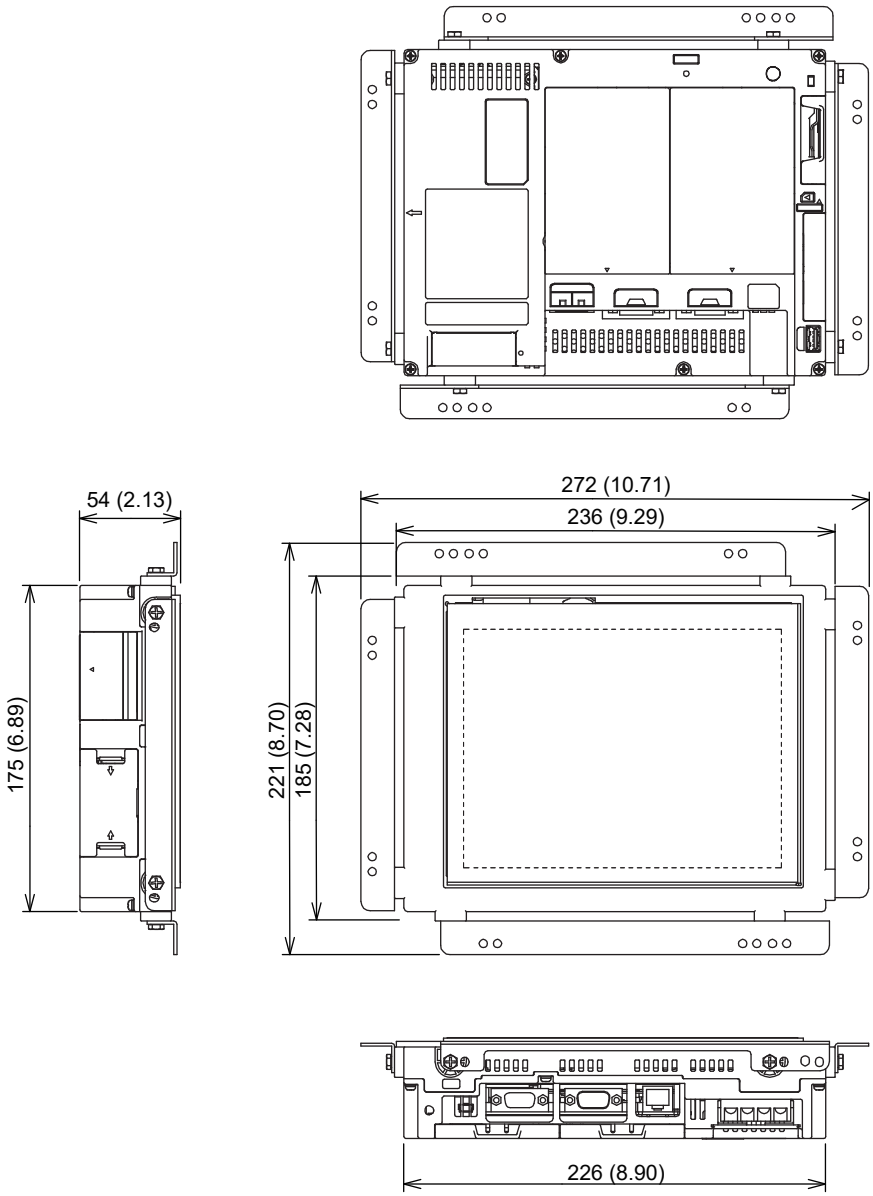

Unit: mm (inch)

The values indicate the dimensions when all the fittings are installed to the GOT.
Install the fittings on the top and bottom, or the right and left of the GOT.

GT2505-V

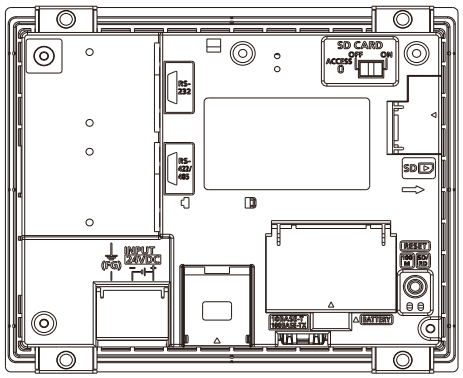

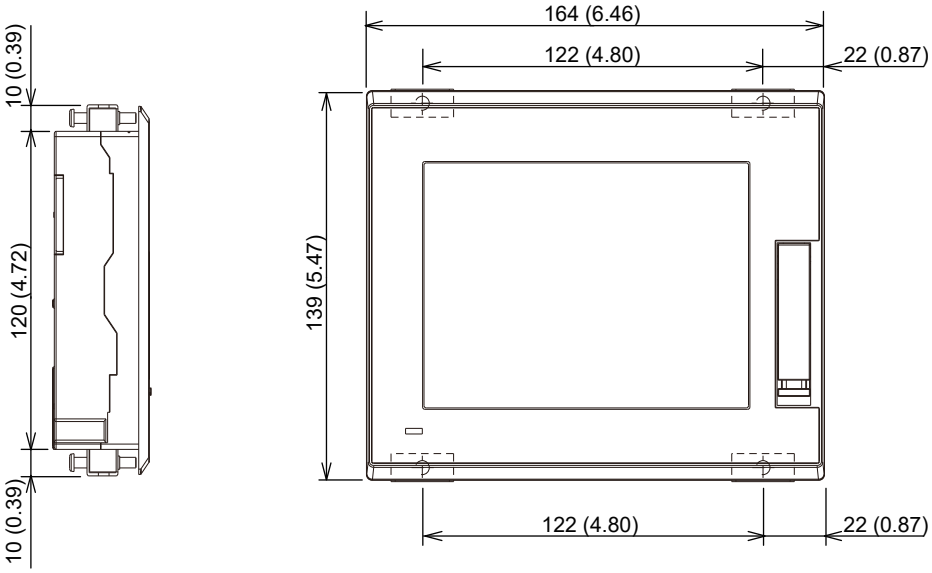

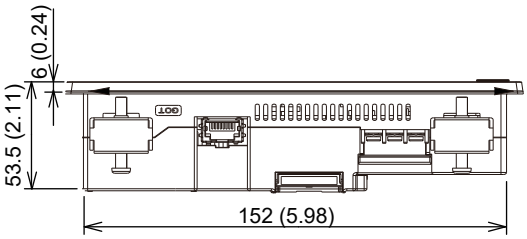

Unit: mm (inch)

GT25HS-V

GT2506HS-V

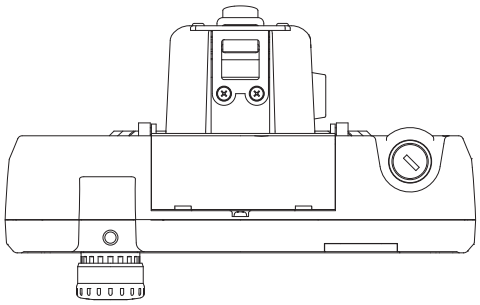

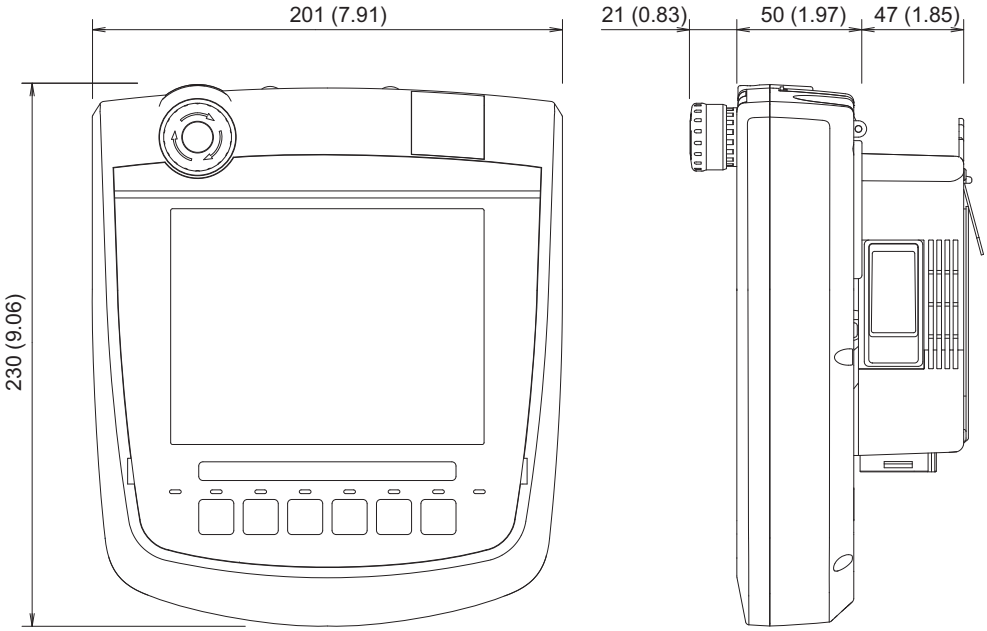

Unit: mm (inch)

GT2505HS-V

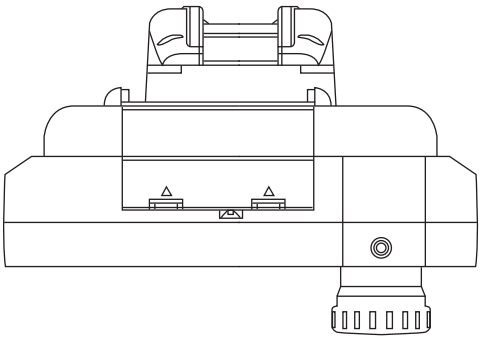

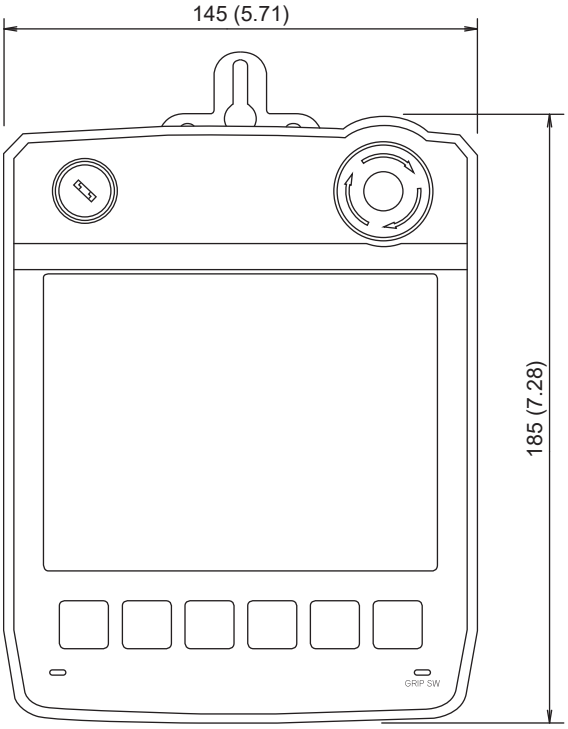

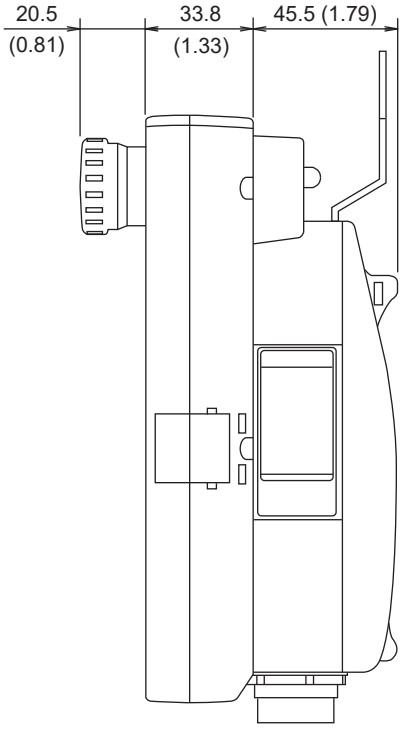

Unit: mm (inch)

GT2310-V

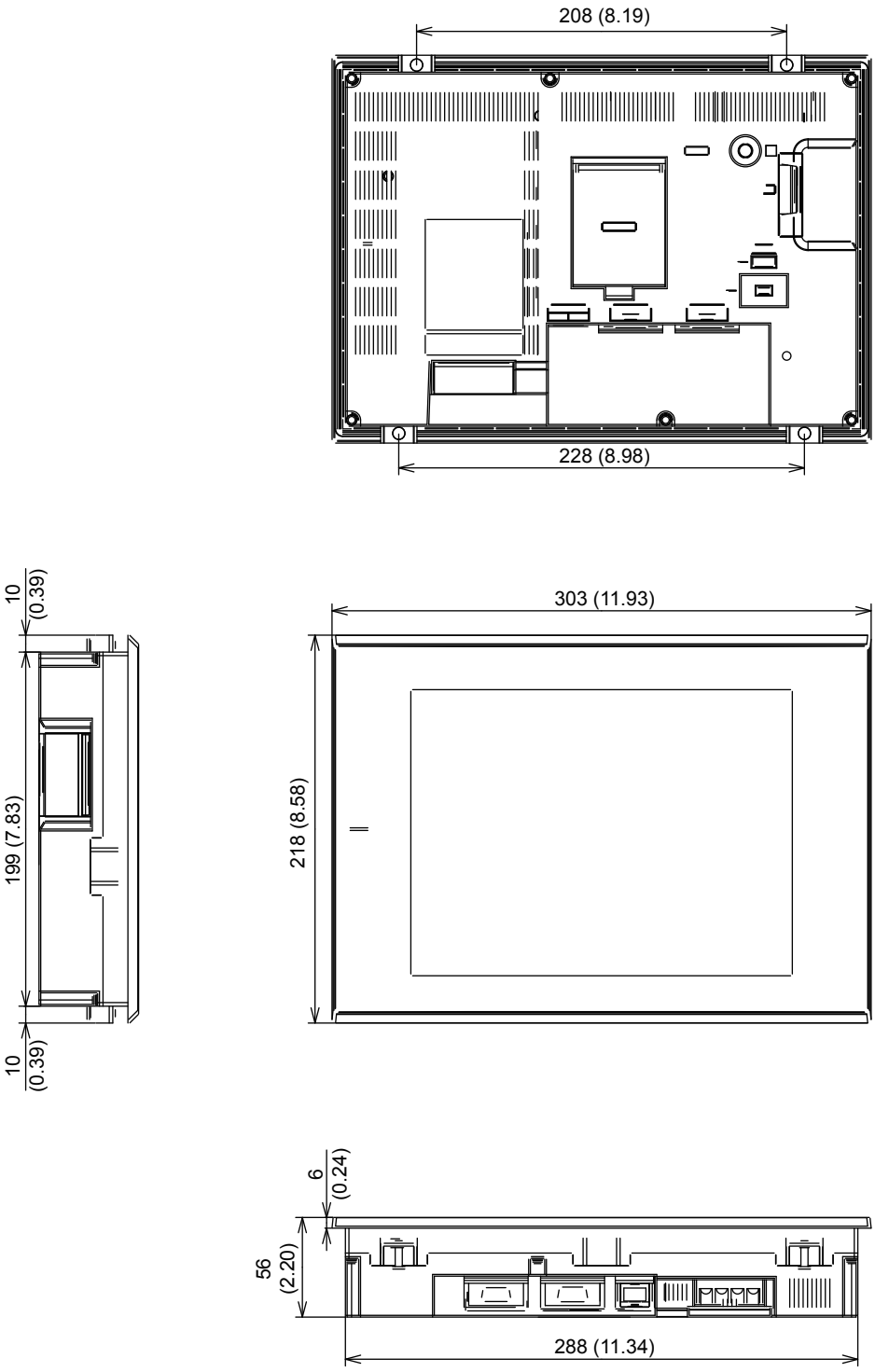

Unit: mm (inch)

GT2308-V

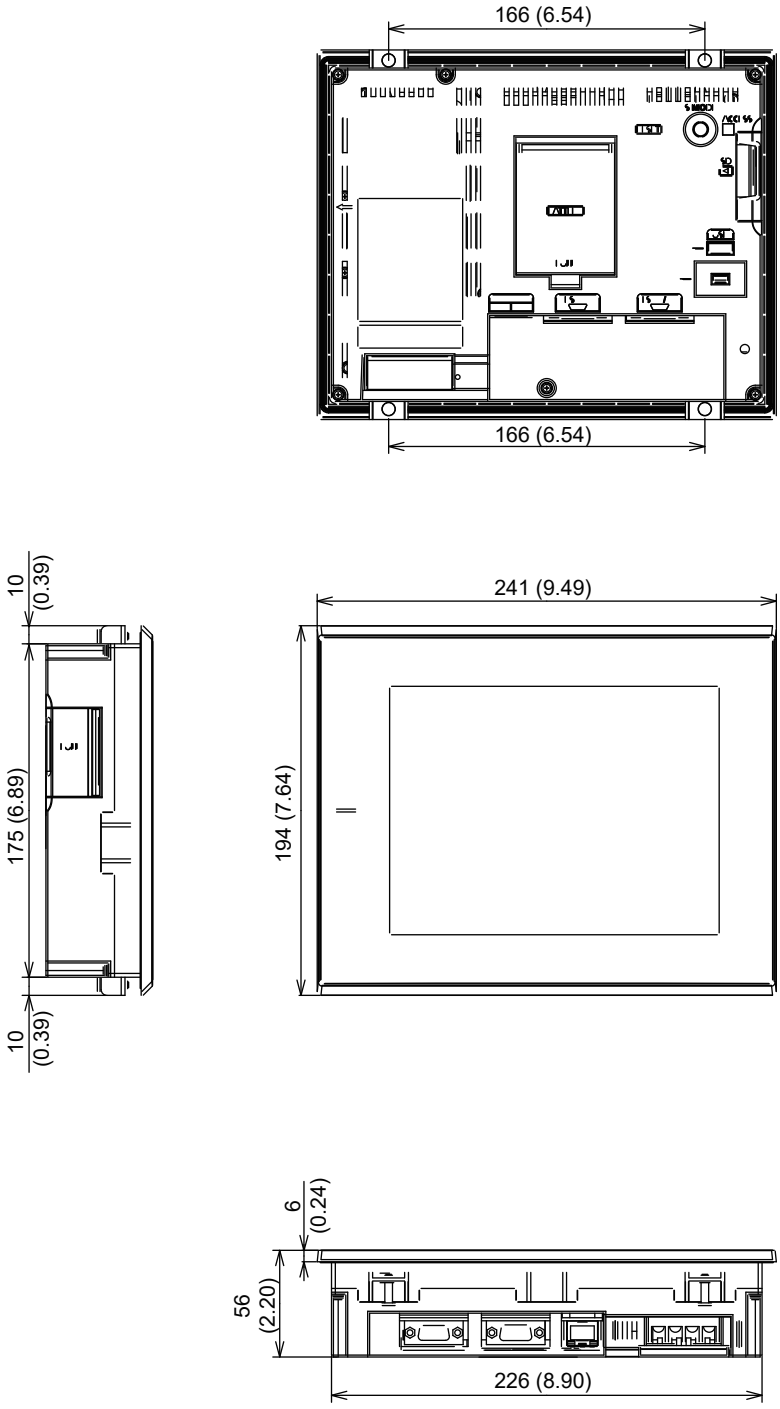

Unit: mm (inch)

GT2107-WTBD, GT2107-WTSD

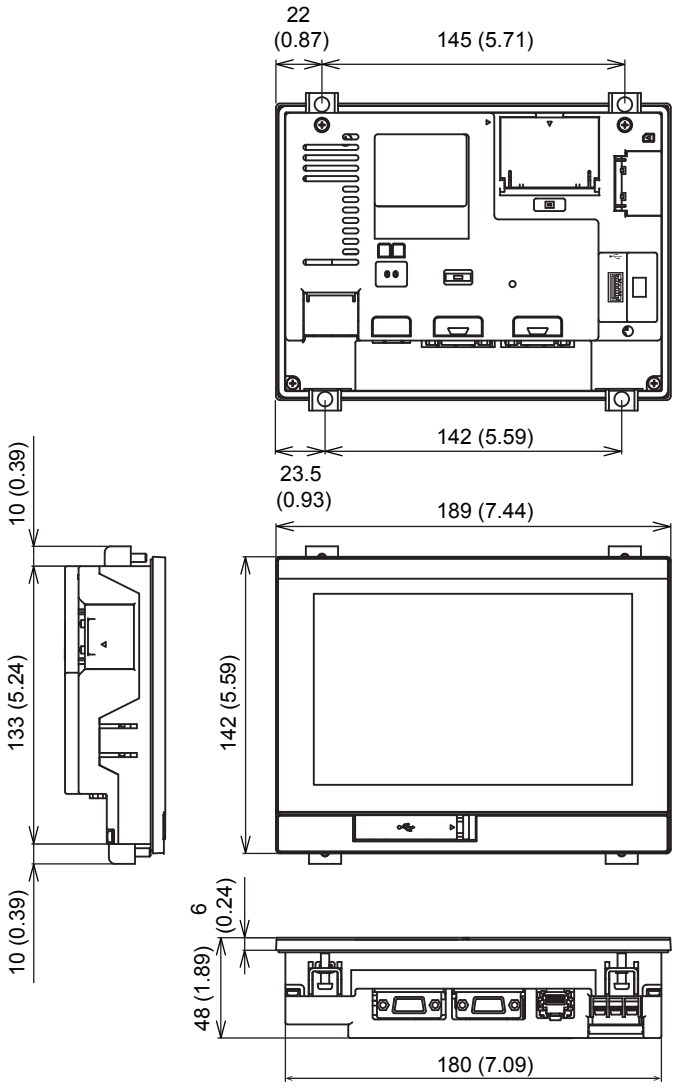

Unit: mm (inch)

GT2105-QTBDS, GT2105-QMBDS

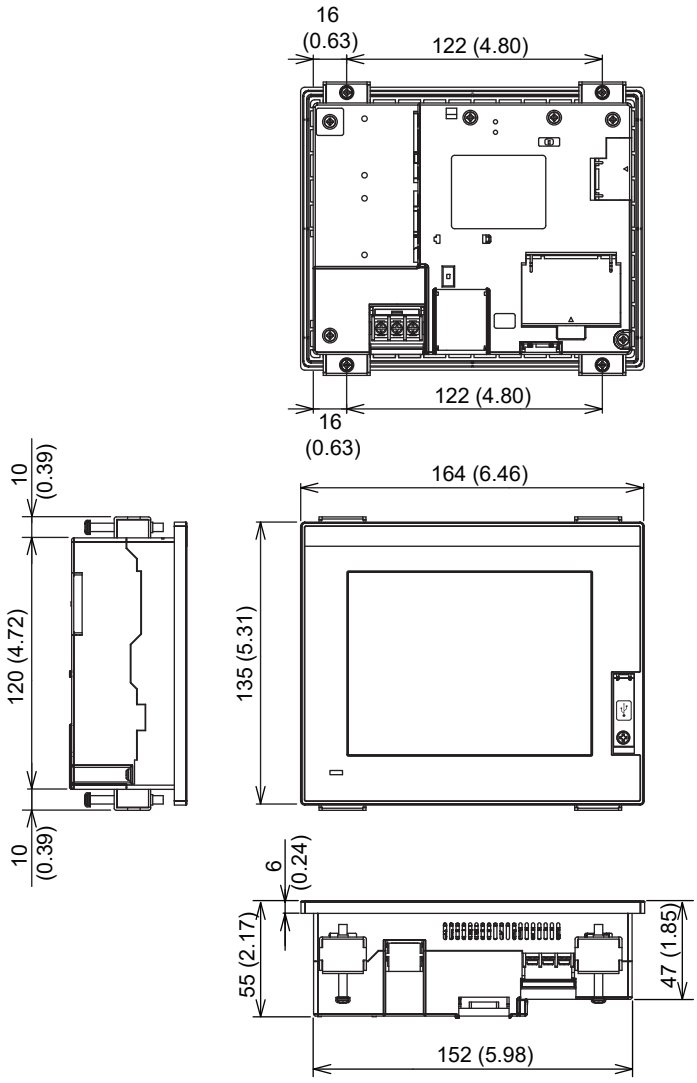

Unit: mm (inch)

GT2104-RTBD

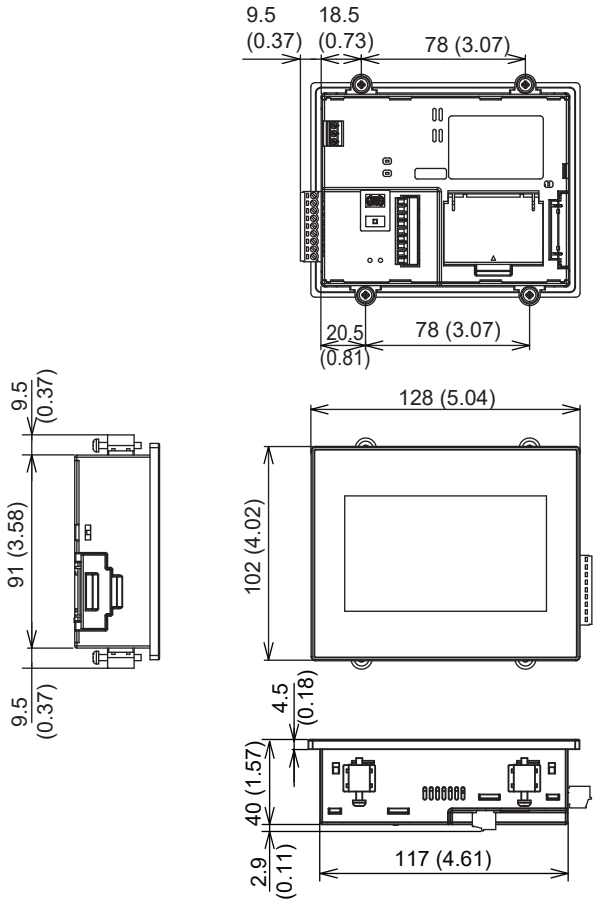

Unit: mm (inch)

GT2104-PMBD

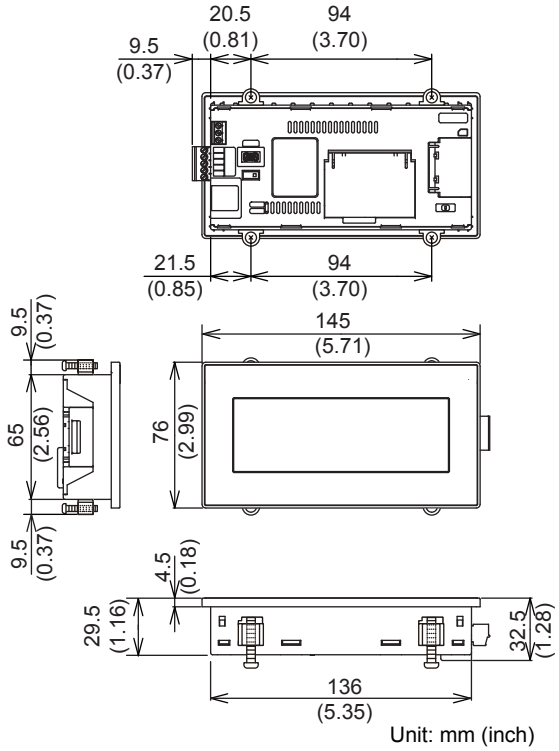

Unit: mm (inch)

GT2104-PMBDS

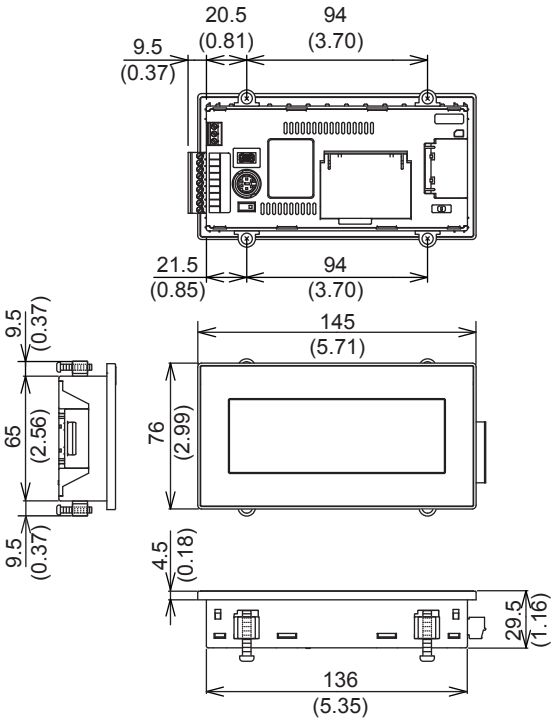

Unit: mm (inch)

GT2104-PMBDS2

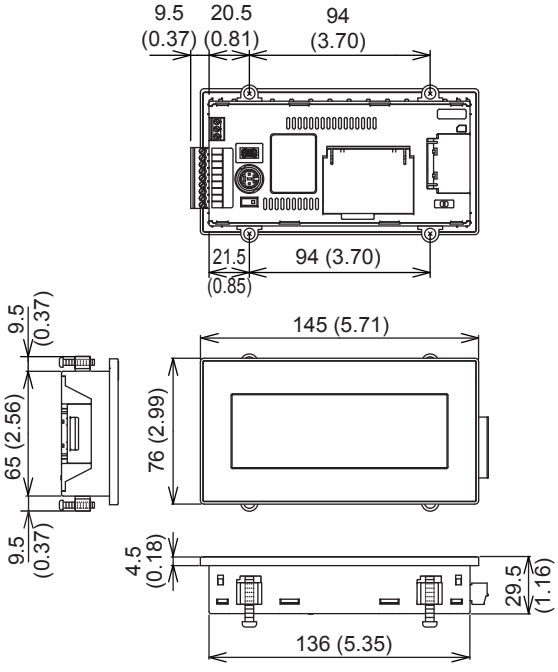

Unit: mm (inch)

GT2104-PMBLS

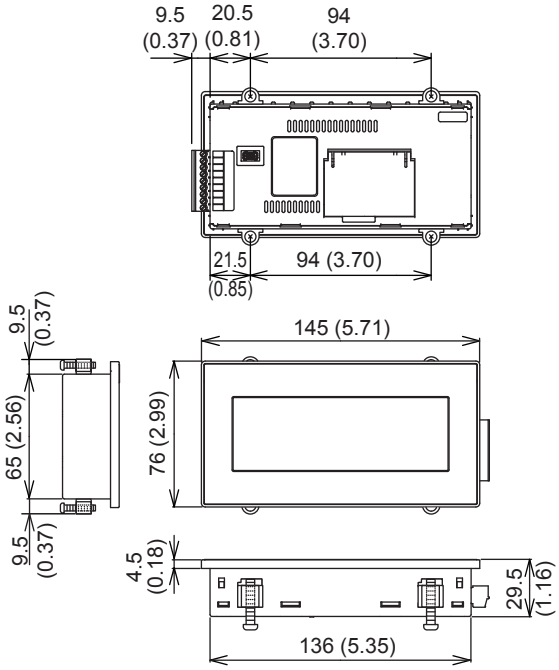

Unit: mm (inch)

GT2103-PMBD

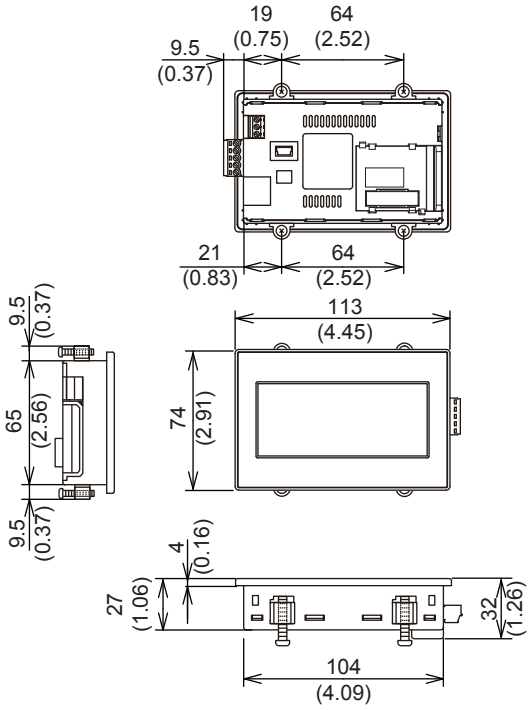

Unit: mm (inch)

GT2103-PMBDS

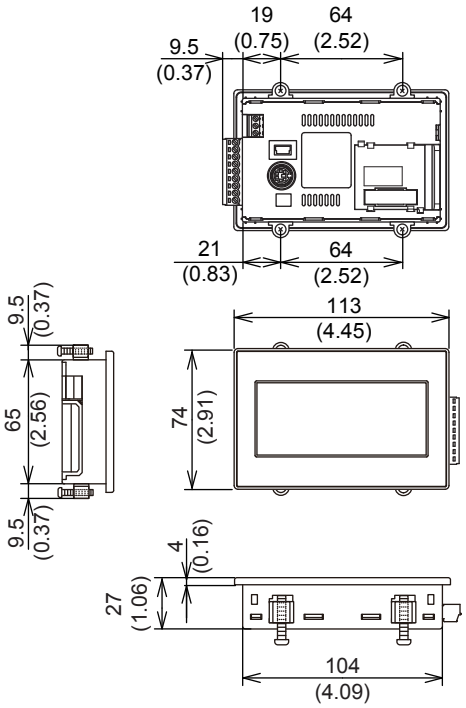

Unit: mm (inch)

GT2103-PMBDS2

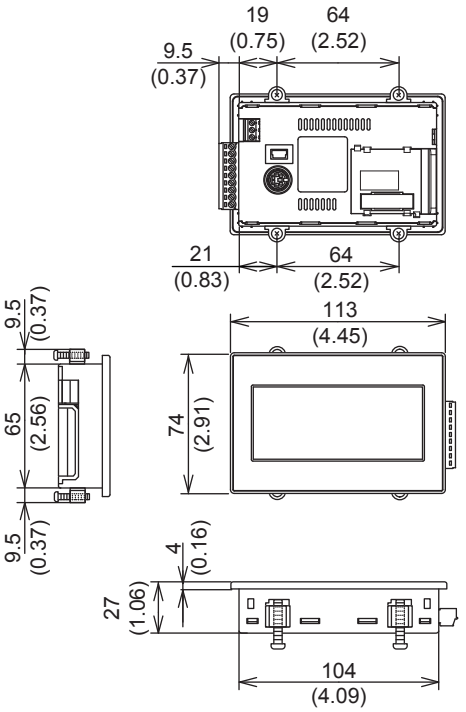

Unit: mm (inch)

GT2103-PMBLS

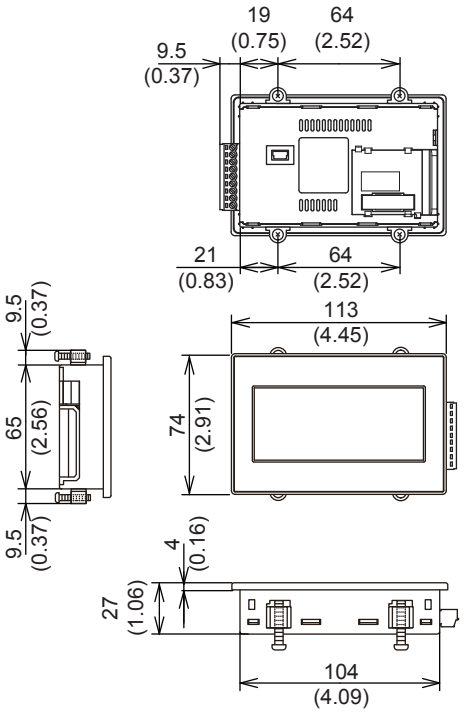

Unit: mm (inch)

13.2 Cable Bend Radius for GT27 with an Extension Unit

The following shows the cable bend radius for the GOT with one extension unit.

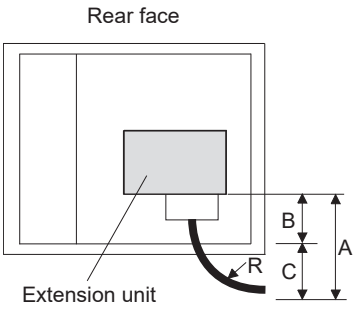

Point

If the cable from the extension unit does not hang below the bottom of the GOT, dimension A is smaller than dimension B.

GT2715-X

Unit: mm (inch)

Model	A	B	C *2	R (cable bend radius)
GT25-J71E71-100 *4	38 (1.50)	135 (5.31)	0	34 (1.34)
GT15-QBUS GT15-QBUS2	88 (3.46)	139 (5.47)	0	50 (1.97)
GT15-75QBUSL GT15-75QBUS2L	88 (3.46)		0	50 (1.97)
GT15-RS2-9P *1 GT15-RS4-9S *1	72.5 (2.85)		0	27.5 (1.08)
GT15-RS4-TE *1	33.5 (1.32)		0	-
GT15-J71LP23-25	*3		*3	*3
GT15-J71BR13	79 (3.11)		0	30 (1.18)
GT25-J71GN13-T2 *4	65 (2.56)	135 (5.31)	0	26 (1.02)
GT15-J71GP23-SX	65 (2.56)	139 (5.47)	0	15 (0.59)
GT15-J71GF13-T2 *4	65 (2.56)		0	26 (1.02)
GT15-J61BT13	47 (1.85)		0	28 (1.10)
GT25-FNADP	-		0	-
GT27-V4-Z	132 (5.20)		0	20 (0.79)
GT27-R2	75 (2.96)		0	32 (1.26)
GT27-R2-Z	77 (3.03)		0	32 (1.26)
GT27-V4R1-Z	BNC: 132 (5.20) RGB: 77 (3.03)		0	BNC: 20 (0.79) RGB: 32 (1.26)
GT27-ROUT	75 (2.96)		0	32 (1.26)
GT27-ROUT-Z	77 (3.03)		0	32 (1.26)
GT27-VHOUT	159.5 (6.28)	140 (5.51)	19 (0.75)	54 (2.13)
GT27-MMR-Z	132 (5.20)	139 (5.47)	0	20 (0.79)
GT15-PRN	52 (2.05)		0	18 (0.71)
GT15-DIO	77 (3.03)		0	43 (1.69)
GT15-DIOR				
GT15-SOUT	41 (1.61)		0	30 (1.18)

*1 For cables prepared by the user, the dimensions in the table are not applied.
*2 If the cable from the extension unit does not hang below the bottom of the GOT, the dimension is 0.
*3 For details of the cable for GT15-J71LP23-25 (optical loop unit), contact your local Mitsubishi Electric System & Service Co., Ltd.
*4 The bend radius depends on the Ethernet cable to be used.

GT2712-S

Unit: mm (inch)

Model	A	B	C *2	R (cable bend radius)
GT25-J71E71-100 *4	38 (1.50)	81 (3.19)	0	34 (1.34)
GT15-QBUS GT15-QBUS2	88 (3.46)	85 (3.35)	3 (0.12)	50 (1.97)
GT15-75QBUSL GT15-75QBUS2L	88 (3.46)		3 (0.12)	50 (1.97)
GT15-RS2-9P *1 GT15-RS4-9S *1	72.5 (2.85)		0	27.5 (1.08)
GT15-RS4-TE *1	33.5 (1.32)		0	-
GT15-J71LP23-25	*3		*3	*3
GT15-J71BR13	79 (3.11)		0	30 (1.18)
GT25-J71GN13-T2 *4	65 (2.56)	81 (3.19)	0	26 (1.02)
GT15-J71GP23-SX	65 (2.56)	85 (3.35)	0	15 (0.59)
GT15-J71GF13-T2 *4	65 (2.56)		0	26 (1.02)
GT15-J61BT13	47 (1.85)		0	28 (1.10)
GT25-FNADP	-		-	-
GT27-V4-Z	132 (5.20)		47 (1.85)	20 (0.79)
GT27-R2	75 (2.96)		0	32 (1.26)
GT27-R2-Z	77 (3.03)		0	32 (1.26)
GT27-V4R1-Z	BNC: 132 (5.20) RGB: 77 (3.03)		BNC: 47 (1.85) RGB: 0	BNC: 20 (0.79) RGB: 32 (1.26)
GT27-ROUT	75 (2.96)		0	32 (1.26)
GT27-ROUT-Z	77 (3.03)		0	32 (1.26)
GT27-VHOUT	159.5 (6.28)	86 (3.39)	73.5 (2.89)	54 (2.13)
GT27-MMR-Z	132 (5.20)	85 (3.35)	47 (1.85)	20 (0.79)
GT15-PRN	52 (2.05)		0	18 (0.71)
GT15-DIO	77 (3.03)		0	43 (1.69)
GT15-DIOR				
GT15-SOUT	41 (1.61)		0	30 (1.18)

*1 For cables prepared by the user, the dimensions in the table are not applied.
*2 If the cable from the extension unit does not hang below the bottom of the GOT, the dimension is 0.
*3 For details of the cable for GT15-J71LP23-25 (optical loop unit), contact your local Mitsubishi Electric System & Service Co., Ltd.
*4 The bend radius depends on the Ethernet cable to be used.

GT2710-S, GT2710-V

Unit: mm (inch)

Model	A	B	C *2	R (cable bend radius)
GT25-J71E71-100 *4	38 (1.50)	74 (2.91)	0	34 (1.34)
GT15-QBUS GT15-QBUS2	88 (3.46)	78 (3.07)	10 (0.39)	50 (1.97)
GT15-75QBUSL GT15-75QBUS2L	88 (3.46)		10 (0.39)	50 (1.97)
GT15-RS2-9P *1 GT15-RS4-9S *1	72.5 (2.85)		0	27.5 (1.08)
GT15-RS4-TE *1	33.5 (1.32)		0	-
GT15-J71LP23-25	*3		*3	*3
GT15-J71BR13	79 (3.11)		1 (0.04)	30 (1.18)
GT25-J71GN13-T2 *4	65 (2.56)	74 (2.91)	0	26 (1.02)
GT15-J71GP23-SX	65 (2.56)	78 (3.07)	0	15 (0.59)
GT15-J71GF13-T2 *4	65 (2.56)		0	26 (1.02)
GT15-J61BT13	47 (1.85)		0	28 (1.10)
GT25-FNADP	-		-	-
GT27-V4-Z	132 (5.20)		54 (2.13)	20 (0.79)
GT27-R2	75 (2.96)		0	32 (1.26)
GT27-R2-Z	77 (3.03)		0	32 (1.26)
GT27-V4R1-Z	BNC: 132 (5.20) RGB: 77 (3.03)		BNC: 54 (2.13) RGB: 0	BNC: 20 (0.79) RGB: 32 (1.26)
GT27-ROUT	75 (2.96)		0	32 (1.26)
GT27-ROUT-Z	77 (3.03)		0	32 (1.26)
GT27-VHOUT	159.5 (6.28)	79 (3.11)	80.5 (3.17)	54 (2.13)
GT27-MMR-Z	132 (5.20)	78 (3.07)	54 (2.13)	20 (0.79)
GT15-PRN	52 (2.05)		0	18 (0.71)
GT15-DIO	77 (3.03)		0	43 (1.69)
GT15-DIOR				
GT15-SOUT	41 (1.61)		0	30 (1.18)

*1 For cables prepared by the user, the dimensions in the table are not applied.
*2 If the cable from the extension unit does not hang below the bottom of the GOT, the dimension is 0.
*3 For details of the cable for GT15-J71LP23-25 (optical loop unit), contact your local Mitsubishi Electric System & Service Co., Ltd.
*4 The bend radius depends on the Ethernet cable to be used.

GT2708-S, GT2708-V

Unit: mm (inch)

Model	A	B	C *2	R (cable bend radius)
GT25-J71E71-100 *4	38 (1.50)	52 (2.05)	0	34 (1.34)
GT15-QBUS GT15-QBUS2	88 (3.46)	56 (2.20)	32 (1.26)	50 (1.97)
GT15-75QBUSL GT15-75QBUS2L	88 (3.46)		32 (1.26)	50 (1.97)
GT15-RS2-9P *1 GT15-RS4-9S *1	72.5 (2.85)		16.5 (0.65)	27.5 (1.08)
GT15-RS4-TE *1	33.5 (1.32)		0	-
GT15-J71LP23-25	*3		*3	*3
GT15-J71BR13	79 (3.11)		23 (0.91)	30 (1.18)
GT25-J71GN13-T2 *4	65 (2.56)	52 (2.05)	13 (0.51)	26 (1.02)
GT15-J71GP23-SX	65 (2.56)	56 (2.20)	9 (0.35)	15 (0.59)
GT15-J71GF13-T2 *4	65 (2.56)		9 (0.35)	26 (1.02)
GT15-J61BT13	47 (1.85)		0	28 (1.10)
GT25-FNADP	-		-	-
GT27-V4-Z	132 (5.20)		76 (2.99)	20 (0.79)
GT27-R2	75 (2.96)		19 (0.75)	32 (1.26)
GT27-R2-Z	77 (3.03)		21 (0.83)	32 (1.26)
GT27-V4R1-Z	BNC: 132 (5.20) RGB: 77 (3.03)		BNC: 76 (2.99) RGB: 21 (0.83)	BNC: 20 (0.79) RGB: 32 (1.26)
GT27-ROUT	75 (2.96)		19 (0.75)	32 (1.26)
GT27-ROUT-Z	77 (3.03)		21 (0.83)	32 (1.26)
GT27-VHOUT	159.5 (6.28)	57 (2.24)	102.5 (4.04)	54 (2.13)
GT27-MMR-Z	132 (5.20)	56 (2.20)	76 (2.99)	20 (0.79)
GT15-PRN	52 (2.05)		0	18 (0.71)
GT15-DIO	77 (3.03)		21 (0.83)	43 (1.69)
GT15-DIOR				
GT15-SOUT	41 (1.61)		0	30 (1.18)

*1 For cables prepared by the user, the dimensions in the table are not applied.
*2 If the cable from the extension unit does not hang below the bottom of the GOT, the dimension is 0.
*3 For details of the cable for GT15-J71LP23-25 (optical loop unit), contact your local Mitsubishi Electric System & Service Co., Ltd.
*4 The bend radius depends on the Ethernet cable to be used.

GT2705-V

Unit: mm (inch)

Model	A	B	C *2	R (cable bend radius)
GT25-J71E71-100 *4	38 (1.50)	12 (0.47)	26 (1.02)	34 (1.34)
GT15-QBUS GT15-QBUS2	88 (3.46)	16 (0.63)	72 (2.84)	50 (1.97)
GT15-75QBUSL GT15-75QBUS2L	88 (3.46)		72 (2.84)	50 (1.97)
GT15-RS2-9P *1 GT15-RS4-9S *1	72.5 (2.85)		56.5 (2.23)	27.5 (1.08)
GT15-RS4-TE *1	33.5 (1.32)		0	-
GT15-J71LP23-25	*3		*3	*3
GT15-J71BR13	79 (3.11)		63 (2.48)	30 (1.18)
GT25-J71GN13-T2 *4	65 (2.56)	12 (0.47)	53 (2.09)	26 (1.02)
GT15-J71GP23-SX	65 (2.56)	16 (0.63)	49 (1.93)	15 (0.59)
GT15-J71GF13-T2 *4	65 (2.56)		49 (1.93)	26 (1.02)
GT15-J61BT13	47 (1.85)		0	28 (1.10)
GT25-FNADP	-		-	-
GT15-PRN	52 (2.05)		36 (1.42)	18 (0.71)
GT15-DIO	77 (3.03)		61 (2.41)	43 (1.69)
GT15-DIOR				
GT15-SOUT	41 (1.61)		0	30 (1.18)

*1 For cables prepared by the user, the dimensions in the table are not applied.
*2 If the cable from the extension unit does not hang below the bottom of the GOT, the dimension is 0.
*3 For details of the cable for GT15-J71LP23-25 (optical loop unit), contact your local Mitsubishi Electric System & Service Co., Ltd.
*4 The bend radius depends on the Ethernet cable to be used.

13.3 Cable Bend Radius for GT25 with an Extension Unit

The following shows the cable bend radius for the GOT with one extension unit.

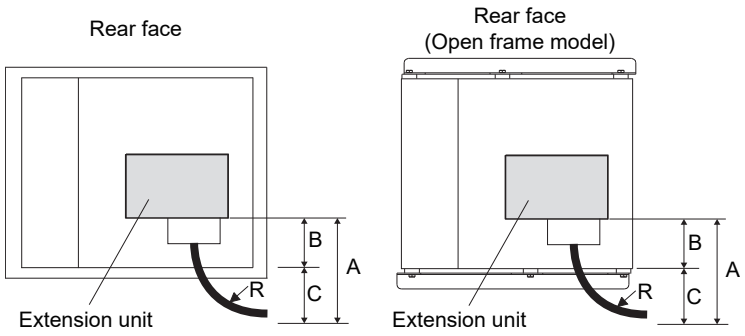

Point

If the cable from the extension unit does not hang below the bottom of the GOT, dimension A is smaller than dimension B.

GT2512-S, GT2512F-S

Unit: mm (inch)

Model	A	B	C *2	R (cable bend radius)
GT25-J71E71-100 *4	38 (1.50)	81 (3.19)	0	34 (1.34)
GT15-QBUS GT15-QBUS2	88 (3.46)	85 (3.35)	3 (0.12)	50 (1.97)
GT15-75QBUSL GT15-75QBUS2L	88 (3.46)		3 (0.12)	50 (1.97)
GT15-RS2-9P *1 GT15-RS4-9S *1	72.5 (2.85)		0	27.5 (1.08)
GT15-RS4-TE *1	33.5 (1.32)		0	-
GT15-J71LP23-25	*3		*3	*3
GT15-J71BR13	79 (3.11)		0	30 (1.18)
GT25-J71GN13-T2 *4	65 (2.56)	81 (3.19)	0	26 (1.02)
GT15-J71GP23-SX	65 (2.56)	85 (3.35)	0	15 (0.59)
GT15-J71GF13-T2 *4	65 (2.56)		0	26 (1.02)
GT15-J61BT13	47 (1.85)		0	28 (1.10)
GT25-FNADP	-		-	-
GT15-PRN	52 (2.05)		0	18 (0.71)
GT15-DIO	77 (3.03)		0	43 (1.69)
GT15-DIOR				
GT15-SOUT	41 (1.61)		0	30 (1.18)

*1 For cables prepared by the user, the dimensions in the table are not applied.
*2 If the cable from the extension unit does not hang below the bottom of the GOT, the dimension is 0.
*3 For details of the cable for GT15-J71LP23-25 (optical loop unit), contact your local Mitsubishi Electric System & Service Co., Ltd.
*4 The bend radius depends on the Ethernet cable to be used.

GT2510-V, GT2510F-V

Unit: mm (inch)

Model	A	B	C *2	R (cable bend radius)
GT25-J71E71-100 *4	38 (1.50)	74 (2.91)	0	34 (1.34)
GT15-QBUS GT15-QBUS2	88 (3.46)	78 (3.07)	10 (0.39)	50 (1.97)
GT15-75QBUSL GT15-75QBUS2L	88 (3.46)		10 (0.39)	50 (1.97)
GT15-RS2-9P *1 GT15-RS4-9S *1	72.5 (2.85)		0	27.5 (1.08)
GT15-RS4-TE *1	33.5 (1.32)		0	-
GT15-J71LP23-25	*3		*3	*3
GT15-J71BR13	79 (3.11)		1 (0.04)	30 (1.18)
GT25-J71GN13-T2 *4	65 (2.56)	74 (2.91)	0	26 (1.02)
GT15-J71GP23-SX	65 (2.56)	78 (3.07)	0	15 (0.59)
GT15-J71GF13-T2 *4	65 (2.56)		0	26 (1.02)
GT15-J61BT13	47 (1.85)		0	28 (1.10)
GT25-FNADP	-		-	-
GT15-PRN	52 (2.05)		0	18 (0.71)
GT15-DIO	77 (3.03)		0	43 (1.69)
GT15-DIOR				
GT15-SOUT	41 (1.61)		0	30 (1.18)

*1 For cables prepared by the user, the dimensions in the table are not applied.
*2 If the cable from the extension unit does not hang below the bottom of the GOT, the dimension is 0.
*3 For details of the cable for GT15-J71LP23-25 (optical loop unit), contact your local Mitsubishi Electric System & Service Co., Ltd.
*4 The bend radius depends on the Ethernet cable to be used.

GT2508-V, GT2508F-V

Unit: mm (inch)

Model	A	B	C *2	R (cable bend radius)
GT25-J71E71-100 *4	38 (1.50)	52 (2.05)	0	34 (1.34)
GT15-QBUS GT15-QBUS2	88 (3.46)	56 (2.20)	32 (1.26)	50 (1.97)
GT15-75QBUSL GT15-75QBUS2L	88 (3.46)		32 (1.26)	50 (1.97)
GT15-RS2-9P *1 GT15-RS4-9S *1	72.5 (2.85)		16.5 (0.65)	27.5 (1.08)
GT15-RS4-TE *1	33.5 (1.32)		0	-
GT15-J71LP23-25	*3		*3	*3
GT15-J71BR13	79 (3.11)		23 (0.91)	30 (1.18)
GT25-J71GN13-T2 *4	65 (2.56)	52 (2.05)	13 (0.51)	26 (1.02)
GT15-J71GP23-SX	65 (2.56)	56 (2.20)	9 (0.35)	15 (0.59)
GT15-J71GF13-T2 *4	65 (2.56)		9 (0.35)	26 (1.02)
GT15-J61BT13	47 (1.85)		0	28 (1.10)
GT25-FNADP	-		-	-
GT15-PRN	52 (2.05)		0	18 (0.71)
GT15-DIO	77 (3.03)		21 (0.83)	43 (1.69)
GT15-DIOR				
GT15-SOUT	41 (1.61)		0	30 (1.18)

*1 For cables prepared by the user, the dimensions in the table are not applied.
*2 If the cable from the extension unit does not hang below the bottom of the GOT, the dimension is 0.
*3 For details of the cable for GT15-J71LP23-25 (optical loop unit), contact your local Mitsubishi Electric System & Service Co., Ltd.
*4 The bend radius depends on the Ethernet cable to be used.

13.4 Depth Dimensions for the GOT with an SD Card Unit

The following table shows the depth dimensions for the GOT with an SD card unit.

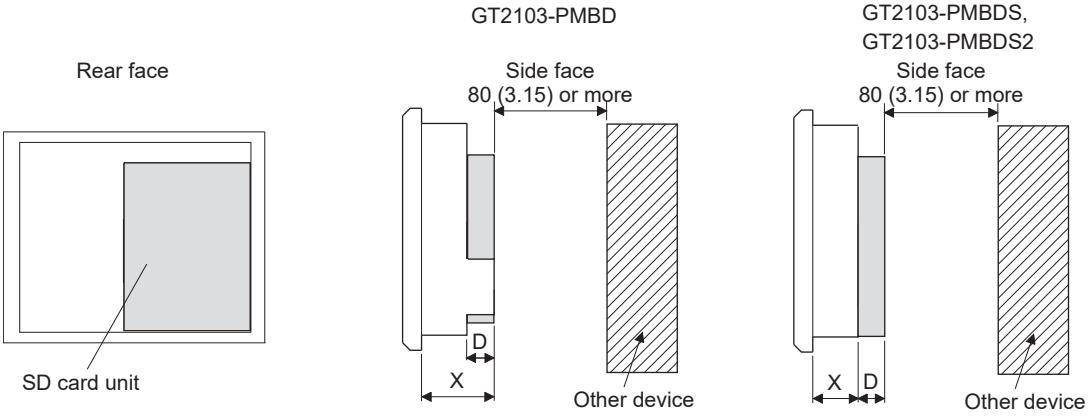

Unit: mm (inch)

GOT type	X	D
GT2103-PMBD	32 (1.26)	5 (0.20)
GT2103-PMBDS GT2103-PMBDS2	27 (1.07)	5 (0.20)

*1 GT2103-PMBLS can not mount the SD card unit.

13.5 Depth Dimensions for the GOT with Extension Units Mounted in Multiple Stages

The following shows how to calculate the depth dimensions for the GOT with several extension units mounted in multiple stages.

1. Select the GOT main unit coefficient from the following table.

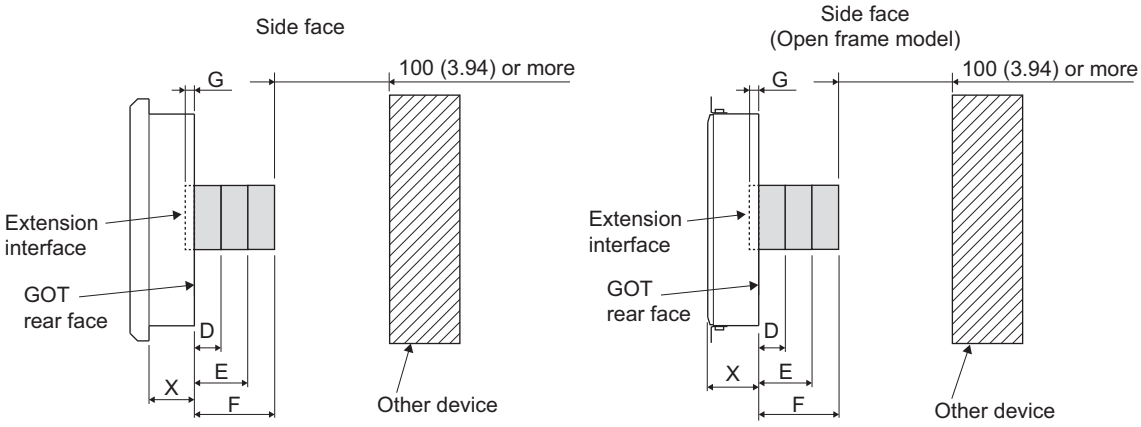

Unit: mm (inch)

GOT type	G *1	X
GT2715	7.5 (0.30)	54 (2.13)
GT2712		46 (1.81)
GT2710		
GT2708		
GT2512		
GT2510		
GT2508		
GT2705		54 (2.13)
GT2512F-S		
GT2510F-V		
GT2508F-V		

*1 Indicates the gap between the GOT rear face and the extension interface.

2. Select the option coefficient of the extension unit from the following table.

Unit: mm (inch)

Model	J (option coefficient)	H (Thickness)
GT25-J71E71-100	21.6 (0.85)	27.6 (1.09)
GT27-R2 *3		
GT27-ROUT *3		
GT27-VHOUT *3		
GT27-V4-Z *1*3	43.2 (1.70)	52.5 (2.07)
GT27-R2-Z *1*3		
GT27-V4R1-Z *1*3		
GT27-ROUT-Z *1*3		
GT15-QBUS	21.5 (0.85)	30.5 (1.20)
GT15-QBUS2		
GT15-75QBUSL *4	-	17.5 (0.69)
GT15-75QBUS2L *4		
GT15-RS2-9P	21.5 (0.85)	30.5 (1.20)
GT15-RS4-9S		
GT15-RS4-TE		
GT15-J71LP23-25		
GT15-J71BR13		
GT15-J61BT13		
GT15-PRN		
GT15-DIO		
GT15-DIOR		
GT15-SOUT		
GT27-MMR-Z *1*3	56.6 (2.23)	65.6 (2.58)
GT25-J71GN13-T2	21.6 (0.85)	27.5 (1.08)
GT15-J71GP23-SX *2	-	44 (1.73)
GT15-J71GF13-T2 *2		
GT25-FNADP *2		32.3 (1.27)

*1 Mounting GT27-V4-Z, GT27-R2-Z, GT27-V4R1-Z, GT27-ROUT-Z, or GT27-MMR-Z requires two stages.
*2 When mounting GT15-J71GP23-SX, GT15-J71GF13-T2, or GT25-FNADP on any other units, mount it in the uppermost stage.
*3 The extension unit cannot be used on GT2705, GT25.
*4 Cannot be stacked with other units.

3. Substitute the coefficients selected in step 1 and step 2 to the following formula.

D (for using one stage) = - G + H

E (for using two stages) = - G + J + H

F (for using three stages) = - G + J + J + H

Example)

Unit: mm (inch)

Dimensions	Extension unit	Formula	Depth dimensions
D (for using one stage)	First stage: GT15-PRN	- 7.5 + 30.5	23 (0.91)
E (for using two stages)	First stage: GT27-R2 Second stage: GT15-DIO	- 7.5 + 21.6 + 30.5	44.6 (1.76)
F (for using three stages)	First stage: GT15-PRN Second stage: GT15-QBUS2 Third stage: GT15-J71GF13-T2	- 7.5 + 43.2 + 30.5	66.2 (2.61)
	First and second stages: GT27-ROUT-Z Third stage: GT15-SOUT	- 7.5 + 21.5 + 21.5 + 44	79.5 (3.13)

13.6 External Dimension Diagrams of the Communication Cable

External dimension diagrams of the bus connection cable connector

Cable model	Cable length (m(ft.))	External dimension diagram
GT15-QC□B	0.6 (2.0), 1.2 (3.9), 3 (10), 5 (16), 10 (33)	☞ Page 428 GT15-QC□B, GT15-QC□BS
GT15-QC□BS	15 (49), 20 (66), 25 (82), 30 (98), 35 (115)	

■GT15-QC□B, GT15-QC□BS

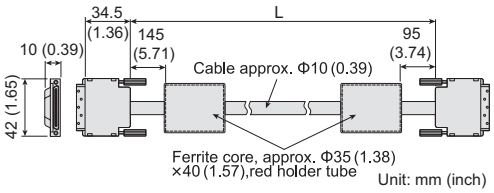

External dimension diagrams of the RS-232 connection cable connector

Cable model	Cable length (m(ft.))	External dimensions
GT01-C30R2-6P	3 (10)	☞ Page 428 GT01-C30R2-6P
GT01-C30R2-9S	3 (10)	☞ Page 428 GT01-C30R2-9S
GT01-C30R2-25P	3 (10)	☞ Page 428 GT01-C30R2-25P
GT10-C30R2-6P	3 (10)	☞ Page 428 GT10-C30R2-6P

■GT01-C30R2-6P

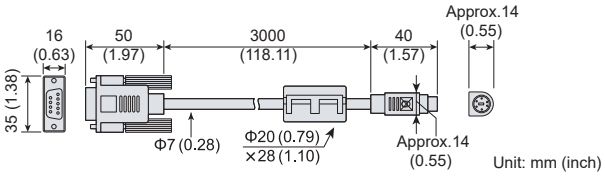

■GT01-C30R2-9S

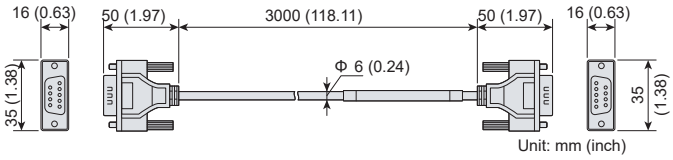

■GT01-C30R2-25P

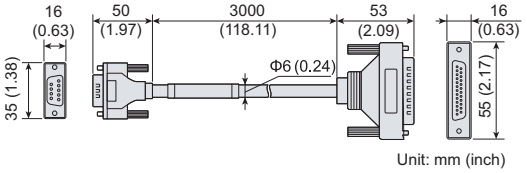

■GT10-C30R2-6P

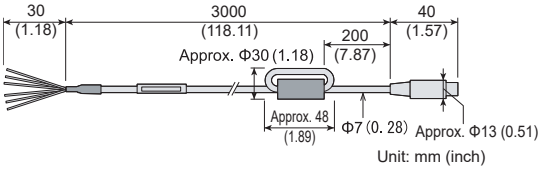

External dimension diagrams of the RS-422 connection cable connector

Cable model	Cable length (m(ft.))	External dimensions
GT01-C30R4-25P	3 (10)	☞ Page 429 GT01-C30R4-25P
GT01-C□R4-25P	10 (33), 20 (66), 30 (98)	☞ Page 429 GT01-C□R4-25P
GT01-C□R4-8P	1 (3.3), 3 (10), 10 (33), 20 (66), 30 (98)	☞ Page 429 GT01-C□R4-8P
GT10-C□R4-8P	1 (3.3), 3 (10), 10 (33), 20 (66), 30 (98)	☞ Page 429 GT10-C□R4-8P, GT21-C□R4-8P5
GT10-C□R4-25P	3 (10), 10 (33), 20 (66), 30 (98)	☞ Page 429 GT10-C□R4-25P, GT21-C□R4-25P5
GT21-C□R4-8P5	1 (3.3), 3 (10), 10 (33), 20 (66), 30 (98)	☞ Page 429 GT10-C□R4-8P, GT21-C□R4-8P5
GT21-C□R4-25P5	3 (10), 10 (33), 20 (66), 30 (98)	☞ Page 429 GT10-C□R4-25P, GT21-C□R4-25P5
GT10-C10R4-8PL	1 (3.3)	☞ Page 430 GT10-C10R4-8PL
GT10-C□R4-8PC	1 (3.3), 3 (10), 10 (33), 20 (66), 30 (98)	☞ Page 430 GT10-C□R4-8PC
GT10-C02H-9SC	0.2 (0.7)	☞ Page 430 GT10-C02H-9SC

■GT01-C30R4-25P

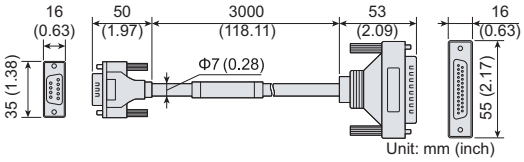

Unit: mm (inch)

■GT01-C□R4-25P

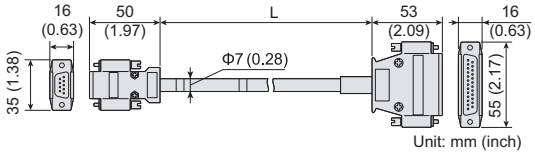

Unit: mm (inch)

■GT01-C□R4-8P

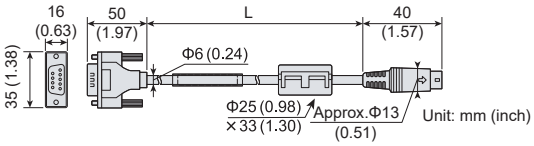

Unit: mm (inch)

■GT10-C□R4-8P, GT21-C□R4-8P5

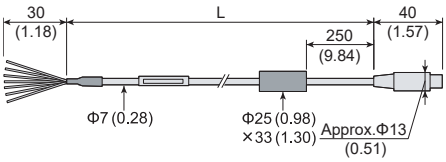

Unit: mm (inch)

■GT10-C□R4-25P, GT21-C□R4-25P5

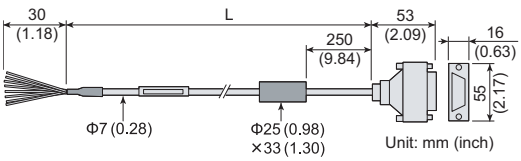

Unit: mm (inch)

■GT10-C10R4-8PL

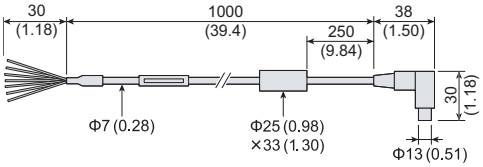

Unit: mm (inch)

■GT10-C□R4-8PC

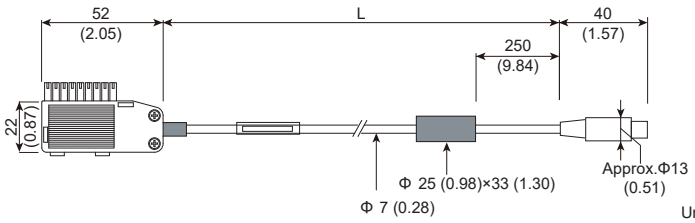

Unit: mm (inch)

■GT10-C02H-9SC

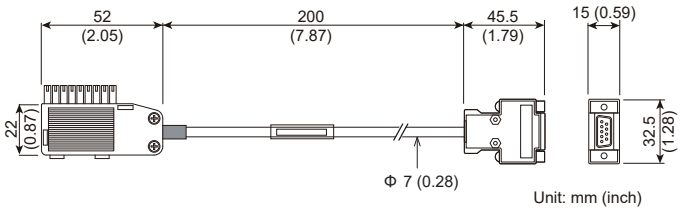

Unit: mm (inch)

External dimension diagrams of RS-485 terminal block conversion unit

Cable model	Cable length (m(ft.))	External dimensions
FA-LTBGT2R4CBL□	0.5 (1.6), 1 (3.3), 2 (6.6)	☞ Page 430 FA-LTBGT2R4CBL□

■FA-LTBGT2R4CBL□

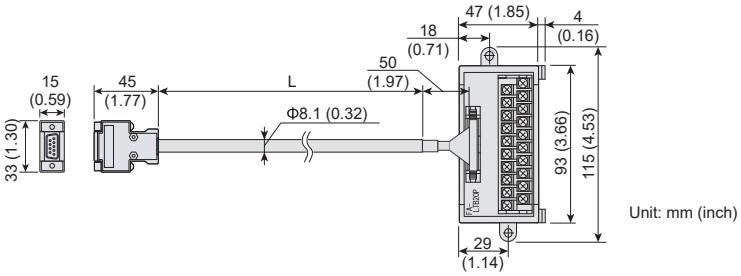

Unit: mm (inch)

13.7 External Dimension Diagrams of the External Cable for Handy GOT

Cable model	Cable length (m(ft.))	External dimension diagram
GT16H-C□□□-42P	3 (10), 6 (20), 10 (33)	☞ Page 431 GT16-C□□□-42P
GT16H-C□□□-37PE	3 (10), 6 (20), 10 (33)	☞ Page 431 GT16H-C□□□-37PE
GT14H-C□□□-42P	3 (10), 6 (20), 10 (33)	☞ Page 431 GT14H-C□□□-42P
GT11H-C□□□-37P	3 (10), 6 (20), 10 (33)	☞ Page 432 GT11H-C□□□-37P
GT11H-C□□□	3 (10), 6 (20), 10 (33)	☞ Page 432 GT11H-C□□□
GT11H-C15R4-8P	15 (49)	☞ Page 432 GT11H-C15R4-8P
GT11H-C15R4-25P	15 (49)	☞ Page 433 GT11H-C15R4-25P
GT11H-C15R2-6P	15 (49)	☞ Page 433 GT11H-C15R2-6P

GT16-C□□□-42P

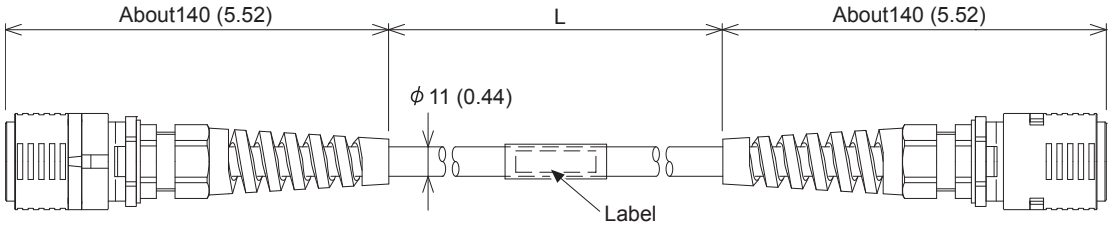

Handy GOT side

Connector conversion box side

Unit: mm (inch)

GT16H-C□□□-37PE

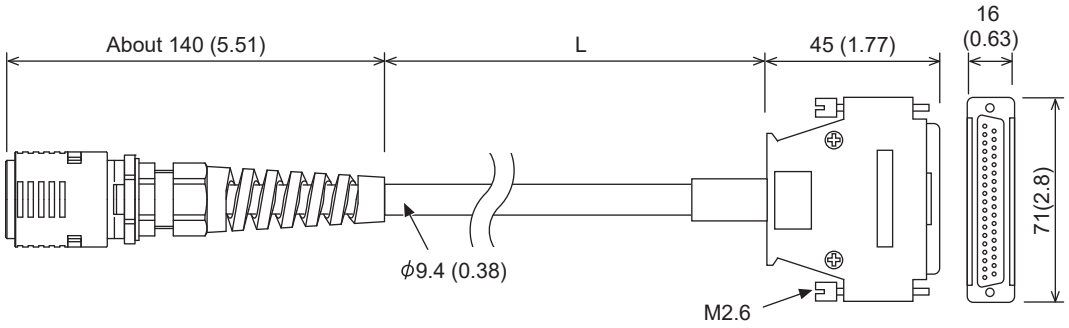

Handy GOT side

Connector conversion box side

Unit: mm (inch)

GT14H-C□□□-42P

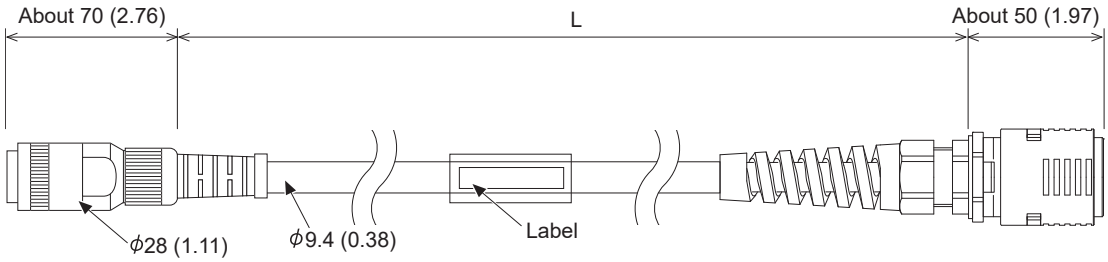

Handy GOT side

Connector conversion box side

Unit: mm (inch)

GT11H-C□□□-37P

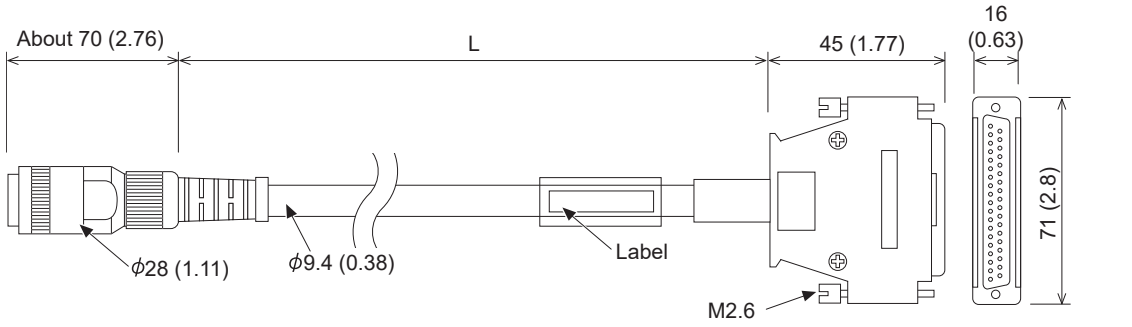

Unit: mm (inch)

GT11H-C□□□

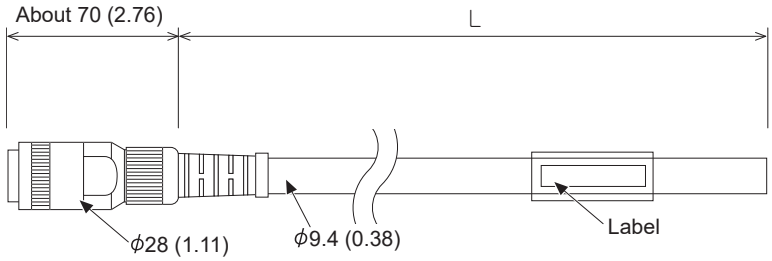

Unit: mm (inch)

GT11H-C15R4-8P

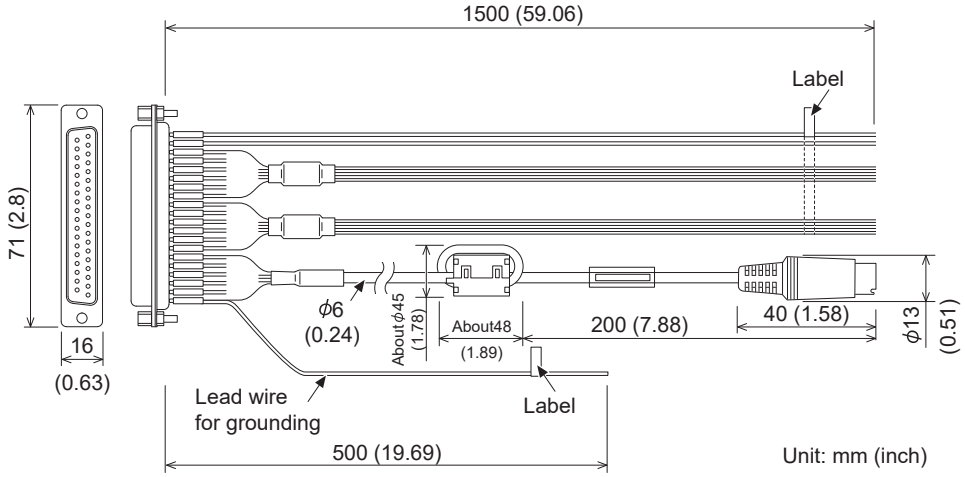

Unit: mm (inch)

GT11H-C15R4-25P

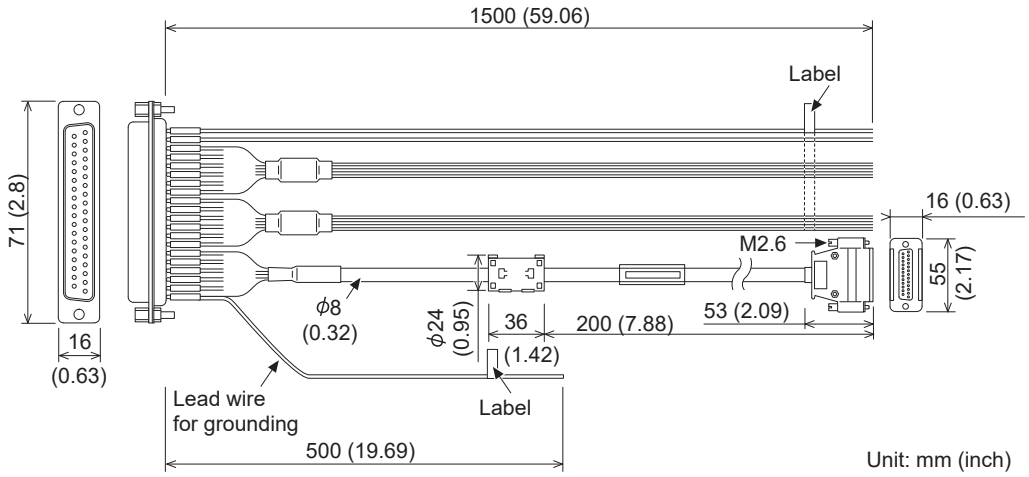

Unit: mm (inch)

GT11H-C15R2-6P

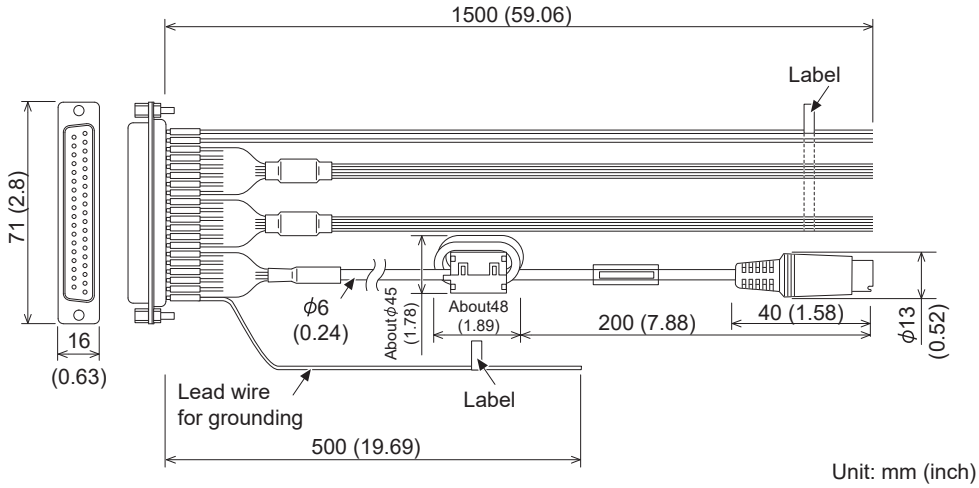

Unit: mm (inch)

13

13.8 Confirming of Versions and Conforming Standards

GT27, GT25 (except GT2505-V and GT25HS-V), GT23

Rating plate

The GOT hardware version, BootOS version at factory default, function version, and conforming standards can be checked with the rating plate on the GOT rear face.

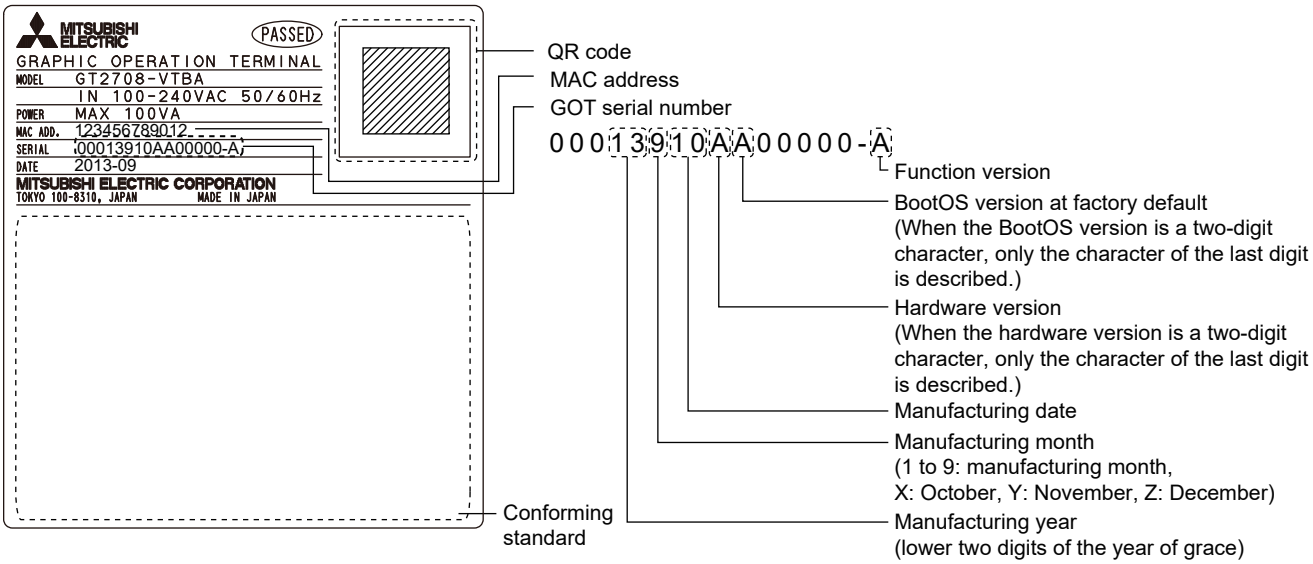

Packing box

The conforming standards can be confirmed by the label on the packing box.

Note that the position of the label differs depending on the model or the shipment date.

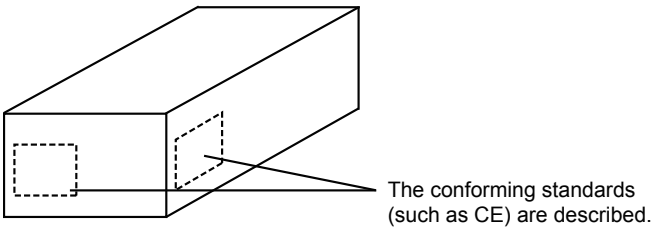

Rating plate

The GOT hardware version, BootOS version at factory default, function version, and conforming standards can be checked with the rating plate on the GOT rear face.

The following shows the rating plate of GT21 as an example.

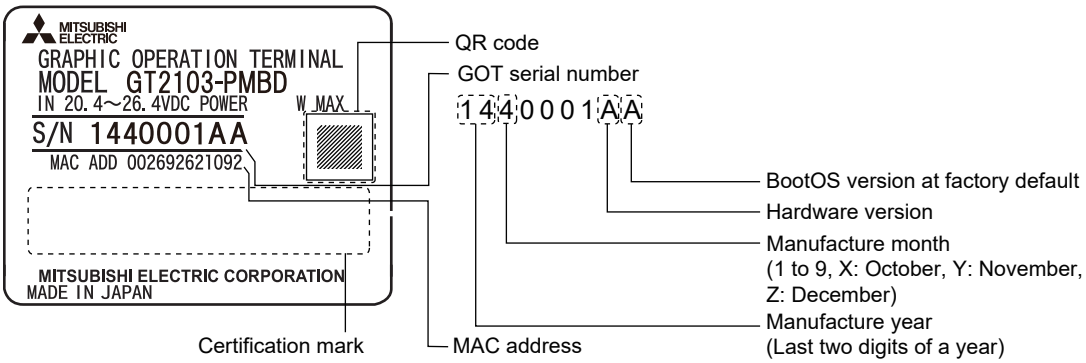

Packing box

The conforming standards can be confirmed by the label on the packing box.

Note that the position of the label differs depending on the shipment date.

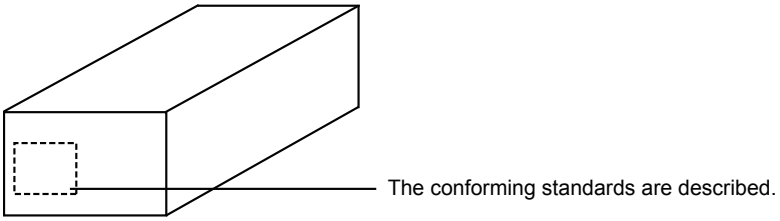

13.9 Transportation Precautions

When transporting lithium batteries, make sure to treat them based on the transport regulations.

Relevant models

The battery for the GOT2000 series is classified as shown in the table below.

Product name	Model	Description	Handled as
Battery for GOT2000 series	GT11-50BAT	Lithium battery	Non-dangerous goods
	GT15-BAT		Dangerous goods *1

*1 Batteries with a lithium content of more than 0.3 g are classified as dangerous goods (Class 9) according to packing instructions.

Transportation guidelines

Products are packed properly in compliance with the transportation regulations prior to shipment. When repacking any of the unpacked products to transport it to another location, make sure to observe the IATA Dangerous Goods Regulations, IMDG Code, and other local transportation regulations.

For details, please consult your transportation company.

13.10 Calculating Consumed Current of GT2705-V

For using multiple extension units, a bar code reader, or a RFID controller, the total current for the extension units, bar code reader, or RFID controller must be within the current that the GT2705-V can supply.
GOT other than GT2705-V, the calculation of the current value is not required.
For the current that the GT2705-V can supply and the current for the extension units, bar code reader, or RFID controller, refer to the following tables. Make sure that the total of consumed current is within the capacity of the GT2705-V.

Current supply capacity of the GOT

Can be supplied current of GT2705-V is 1.3A.

Current consumed by an extension unit/barcode reader/RFID controller

Module type	Consumed current (A)
GT25-J71E71-100	0.14
GT15-QBUS GT15-QBUS2 GT15-75QBUSL GT15-75QBUS2L	0.275 *1
GT15-ABUS GT15-ABUS2 GT15-75ABUSL GT15-75ABUS2L	0.12
GT15-RS2-9P	0.29
GT15-RS4-9S	0.33
GT15-RS4-TE	0.3
GT25-J71GN13-T2	0.92
GT15-J71GP23-SX	1.07
GT15-J71GF13-T2	0.96
GT15-J71LP23-25	0.56
GT15-J71BR13	0.77
GT15-J61BT13	0.56
GT25-FNADP	0.4
Barcode reader	*2
GT15-PRN	0.09
GT15-SOUT	0.08
GT15-DIO	0.1
GT15-DIOR	0.1
RFID controller	*2

*1 Value used for calculating the current consumption of the multi-channel function.
For the specifications of the unit, refer to the manual included with the unit.

*2 When the GOT supplies power to a barcode reader or a RFID controller from the standard interface, add their consumed current.(Maximum value is less than 0.3 A)

Calculation example

■When connecting the GT15-QBUS2 and GT15-RS2-9P (2 units) to the GT2705-V

Current supply capacity of GT2705-V 1.3A

Total consumed current 0.275+0.29+0.29=0.855A

Since the calculated value is within the capacity of the GT2705-V, they can be connected to the GT2705-V.

■When connecting the GT15-J71GP23-SX and GT15-RS2-9P (2 units) to the GT2705-V

Current supply capacity of GT2705-V 1.3A

Total consumed current 1.07+0.29+0.29=1.65A

Since the calculated value exceeds the capacity of the GT2705-V, such configuration is not allowed.

13.11 Open Source Software

u-boot

GT27 and GT25 models use U-Boot under the GNU General Public License (GPLv2).

You can obtain the source code of the software and copy, distribute, or modify the software under the GPL.

Mitsubishi Electric Corporation can provide the source code of U-Boot licensed under the GPL.

To obtain the source code, contact your local sales office.

Mitsubishi Electric Corporation will not guarantee the source code we provide if it is reused.

Mitsubishi Electric Corporation will not take any responsibility for the source code.

Please refrain from asking information on the source code of open source.

NOTE! This copyright does *not* cover the so-called "standalone"
applications that use U-Boot services by means of the jump table
provided by U-Boot exactly for this purpose - this is merely
considered normal use of U-Boot, and does *not* fall under the
heading of "derived work".

The header files "include/image.h" and "include/asm-*/u-boot.h"
define interfaces to U-Boot. Including these (unmodified) header
files in another file is considered normal use of U-Boot, and does
not fall under the heading of "derived work".

Also note that the GPL below is copyrighted by the Free Software
Foundation, but the instance of code that it refers to (the U-Boot
source code) is copyrighted by me and others who actually wrote it.
-- Wolfgang Denk

==========

GNU GENERAL PUBLIC LICENSE
Version 2, June 1991

Copyright (C) 1989, 1991 Free Software Foundation, Inc.
59 Temple Place, Suite 330, Boston, MA 02111-1307 USA
Everyone is permitted to copy and distribute verbatim copies
of this license document, but changing it is not allowed.

Preamble

The licenses for most software are designed to take away your
freedom to share and change it. By contrast, the GNU General Public
License is intended to guarantee your freedom to share and change free
software--to make sure the software is free for all its users. This
General Public License applies to most of the Free Software
Foundation's software and to any other program whose authors commit to
using it. (Some other Free Software Foundation software is covered by
the GNU Library General Public License instead.) You can apply it to
your programs, too.

When we speak of free software, we are referring to freedom, not
price. Our General Public Licenses are designed to make sure that you
have the freedom to distribute copies of free software (and charge for
this service if you wish), that you receive source code or can get it
if you want it, that you can change the software or use pieces of it
in new free programs; and that you know you can do these things.

To protect your rights, we need to make restrictions that forbid
anyone to deny you these rights or to ask you to surrender the rights.
These restrictions translate to certain responsibilities for you if you
distribute copies of the software, or if you modify it.

For example, if you distribute copies of such a program, whether
gratis or for a fee, you must give the recipients all the rights that
you have. You must make sure that they, too, receive or can get the
source code. And you must show them these terms so they know their
rights.

We protect your rights with two steps: (1) copyright the software, and (2) offer you this license which gives you legal permission to copy, distribute and/or modify the software.

Also, for each author's protection and ours, we want to make certain that everyone understands that there is no warranty for this free software. If the software is modified by someone else and passed on, we want its recipients to know that what they have is not the original, so that any problems introduced by others will not reflect on the original authors' reputations.

Finally, any free program is threatened constantly by software patents. We wish to avoid the danger that redistributors of a free program will individually obtain patent licenses, in effect making the program proprietary. To prevent this, we have made it clear that any patent must be licensed for everyone's free use or not licensed at all.

The precise terms and conditions for copying, distribution and modification follow.

GNU GENERAL PUBLIC LICENSE
TERMS AND CONDITIONS FOR COPYING, DISTRIBUTION AND MODIFICATION

0. This License applies to any program or other work which contains a notice placed by the copyright holder saying it may be distributed under the terms of this General Public License. The "Program", below, refers to any such program or work, and a "work based on the Program" means either the Program or any derivative work under copyright law: that is to say, a work containing the Program or a portion of it, either verbatim or with modifications and/or translated into another language. (Hereinafter, translation is included without limitation in the term "modification".) Each licensee is addressed as "you".

Activities other than copying, distribution and modification are not covered by this License; they are outside its scope. The act of running the Program is not restricted, and the output from the Program is covered only if its contents constitute a work based on the Program (independent of having been made by running the Program). Whether that is true depends on what the Program does.

1. You may copy and distribute verbatim copies of the Program's source code as you receive it, in any medium, provided that you conspicuously and appropriately publish on each copy an appropriate copyright notice and disclaimer of warranty; keep intact all the notices that refer to this License and to the absence of any warranty; and give any other recipients of the Program a copy of this License along with the Program.

You may charge a fee for the physical act of transferring a copy, and you may at your option offer warranty protection in exchange for a fee.

2. You may modify your copy or copies of the Program or any portion of it, thus forming a work based on the Program, and copy and distribute such modifications or work under the terms of Section 1 above, provided that you also meet all of these conditions:

a) You must cause the modified files to carry prominent notices stating that you changed the files and the date of any change.

b) You must cause any work that you distribute or publish, that in whole or in part contains or is derived from the Program or any part thereof, to be licensed as a whole at no charge to all third parties under the terms of this License.

c) If the modified program normally reads commands interactively when run, you must cause it, when started running for such interactive use in the most ordinary way, to print or display an announcement including an appropriate copyright notice and a notice that there is no warranty (or else, saying that you provide a warranty) and that users may redistribute the program under these conditions, and telling the user how to view a copy of this License. (Exception: if the Program itself is interactive but does not normally print such an announcement, your work based on the Program is not required to print an announcement.)

These requirements apply to the modified work as a whole. If identifiable sections of that work are not derived from the Program, and can be reasonably considered independent and separate works in themselves, then this License, and its terms, do not apply to those sections when you distribute them as separate works. But when you distribute the same sections as part of a whole which is a work based on the Program, the distribution of the whole must be on the terms of this License, whose permissions for other licensees extend to the entire whole, and thus to each and every part regardless of who wrote it.

Thus, it is not the intent of this section to claim rights or contest your rights to work written entirely by you; rather, the intent is to exercise the right to control the distribution of derivative or collective works based on the Program.

In addition, mere aggregation of another work not based on the Program with the Program (or with a work based on the Program) on a volume of a storage or distribution medium does not bring the other work under the scope of this License.

3. You may copy and distribute the Program (or a work based on it, under Section 2) in object code or executable form under the terms of Sections 1 and 2 above provided that you also do one of the following:

a) Accompany it with the complete corresponding machine-readable source code, which must be distributed under the terms of Sections 1 and 2 above on a medium customarily used for software interchange; or,

b) Accompany it with a written offer, valid for at least three years, to give any third party, for a charge no more than your cost of physically performing source distribution, a complete machine-readable copy of the corresponding source code, to be distributed under the terms of Sections 1 and 2 above on a medium customarily used for software interchange; or,

c) Accompany it with the information you received as to the offer to distribute corresponding source code. (This alternative is allowed only for noncommercial distribution and only if you received the program in object code or executable form with such an offer, in accord with Subsection b above.)

The source code for a work means the preferred form of the work for making modifications to it. For an executable work, complete source code means all the source code for all modules it contains, plus any associated interface definition files, plus the scripts used to control compilation and installation of the executable. However, as a special exception, the source code distributed need not include anything that is normally distributed (in either source or binary form) with the major components (compiler, kernel, and so on) of the operating system on which the executable runs, unless that component itself accompanies the executable.

If distribution of executable or object code is made by offering access to copy from a designated place, then offering equivalent access to copy the source code from the same place counts as distribution of the source code, even though third parties are not compelled to copy the source along with the object code.

4. You may not copy, modify, sublicense, or distribute the Program except as expressly provided under this License. Any attempt otherwise to copy, modify, sublicense or distribute the Program is void, and will automatically terminate your rights under this License. However, parties who have received copies, or rights, from you under this License will not have their licenses terminated so long as such parties remain in full compliance.

5. You are not required to accept this License, since you have not signed it. However, nothing else grants you permission to modify or distribute the Program or its derivative works. These actions are prohibited by law if you do not accept this License. Therefore, by modifying or distributing the Program (or any work based on the Program), you indicate your acceptance of this License to do so, and all its terms and conditions for copying, distributing or modifying the Program or works based on it.

6. Each time you redistribute the Program (or any work based on the Program), the recipient automatically receives a license from the original licensor to copy, distribute or modify the Program subject to these terms and conditions. You may not impose any further restrictions on the recipients' exercise of the rights granted herein. You are not responsible for enforcing compliance by third parties to this License.

7. If, as a consequence of a court judgment or allegation of patent infringement or for any other reason (not limited to patent issues), conditions are imposed on you (whether by court order, agreement or otherwise) that contradict the conditions of this License, they do not excuse you from the conditions of this License. If you cannot distribute so as to satisfy simultaneously your obligations under this License and any other pertinent obligations, then as a consequence you may not distribute the Program at all. For example, if a patent license would not permit royalty-free redistribution of the Program by all those who receive copies directly or indirectly through you, then the only way you could satisfy both it and this License would be to refrain entirely from distribution of the Program.

If any portion of this section is held invalid or unenforceable under any particular circumstance, the balance of the section is intended to apply and the section as a whole is intended to apply in other circumstances.

It is not the purpose of this section to induce you to infringe any patents or other property right claims or to contest validity of any such claims; this section has the sole purpose of protecting the integrity of the free software distribution system, which is implemented by public license practices. Many people have made generous contributions to the wide range of software distributed through that system in reliance on consistent application of that system; it is up to the author/donor to decide if he or she is willing to distribute software through any other system and a licensee cannot impose that choice.

This section is intended to make thoroughly clear what is believed to be a consequence of the rest of this License.

8. If the distribution and/or use of the Program is restricted in certain countries either by patents or by copyrighted interfaces, the original copyright holder who places the Program under this License may add an explicit geographical distribution limitation excluding those countries, so that distribution is permitted only in or among countries not thus excluded. In such case, this License incorporates the limitation as if written in the body of this License.

9. The Free Software Foundation may publish revised and/or new versions of the General Public License from time to time. Such new versions will be similar in spirit to the present version, but may differ in detail to address new problems or concerns.

Each version is given a distinguishing version number. If the Program specifies a version number of this License which applies to it and "any later version", you have the option of following the terms and conditions either of that version or of any later version published by the Free Software Foundation. If the Program does not specify a version number of this License, you may choose any version ever published by the Free Software Foundation.

10. If you wish to incorporate parts of the Program into other free programs whose distribution conditions are different, write to the author to ask for permission. For software which is copyrighted by the Free Software Foundation, write to the Free Software Foundation; we sometimes make exceptions for this. Our decision will be guided by the two goals of preserving the free status of all derivatives of our free software and of promoting the sharing and reuse of software generally.

NO WARRANTY

11. BECAUSE THE PROGRAM IS LICENSED FREE OF CHARGE, THERE IS NO WARRANTY FOR THE PROGRAM, TO THE EXTENT PERMITTED BY APPLICABLE LAW. EXCEPT WHEN OTHERWISE STATED IN WRITING THE COPYRIGHT HOLDERS AND/OR OTHER PARTIES PROVIDE THE PROGRAM "AS IS" WITHOUT WARRANTY OF ANY KIND, EITHER EXPRESSED OR IMPLIED, INCLUDING, BUT NOT LIMITED TO, THE IMPLIED WARRANTIES OF MERCHANTABILITY AND FITNESS FOR A PARTICULAR PURPOSE. THE ENTIRE RISK AS TO THE QUALITY AND PERFORMANCE OF THE PROGRAM IS WITH YOU. SHOULD THE PROGRAM PROVE DEFECTIVE, YOU ASSUME THE COST OF ALL NECESSARY SERVICING, REPAIR OR CORRECTION.

12. IN NO EVENT UNLESS REQUIRED BY APPLICABLE LAW OR AGREED TO IN WRITING WILL ANY COPYRIGHT HOLDER, OR ANY OTHER PARTY WHO MAY MODIFY AND/OR REDISTRIBUTE THE PROGRAM AS PERMITTED ABOVE, BE LIABLE TO YOU FOR DAMAGES, INCLUDING ANY GENERAL, SPECIAL, INCIDENTAL OR CONSEQUENTIAL DAMAGES ARISING OUT OF THE USE OR INABILITY TO USE THE PROGRAM (INCLUDING BUT NOT LIMITED TO LOSS OF DATA OR DATA BEING RENDERED INACCURATE OR LOSSES SUSTAINED BY YOU OR THIRD PARTIES OR A FAILURE OF THE PROGRAM TO OPERATE WITH ANY OTHER PROGRAMS), EVEN IF SUCH HOLDER OR OTHER PARTY HAS BEEN ADVISED OF THE POSSIBILITY OF SUCH DAMAGES.

END OF TERMS AND CONDITIONS

REVISIONS

* The manual number is given on the bottom left of the back cover.

Revision date	* Manual Number	Revision
Sep. 2013	SH(NA)-081194ENG-A	First printing: GT Designer3 Version1.100E
Nov. 2013	SH(NA)-081194ENG-B	Compatible with GT Works3 Version1.104J • Description of SAFETY PRECAUTIONS changed • Abbreviations and generic terms changed • Compatible with printer unit • Compatible with wireless LAN connection (to be supported soon) • General specifications changed • Performance specifications changed • Printer unit added to the list of Depth dimensions and cable bend dimensions for the GOT with an extension unit, and Depth dimensions for the GOT with several extension units mounted in multiple stages.
Jan. 2014	SH(NA)-081194ENG-C	Compatible with GT Works3 Version1.108N • Abbreviations and generic terms changed • Installation Position changed • Depth dimensions and cable bend dimensions for the GOT with an extension unit changed
Apr. 2014	SH(NA)-081194ENG-D	Compatible with GT Works3 Version1.112S • Description of SAFETY PRECAUTIONS changed • Abbreviations and generic terms changed • GT2715-X, GT25, and options added
Jun. 2014	SH(NA)-081194ENG-E	Compatible with GT Works3 Version1.117X • Description of SAFETY PRECAUTIONS changed • Vertical installation of GT27, GT25, and GT23 supported
Jul. 2014	SH(NA)-081194ENG-F	Compatible with GT Works3 Version1.118Y • Abbreviations, generic terms, and icon indications changed • Battery installation and removal procedures changed
Oct. 2014	SH(NA)-081194ENG-G	Compatible with GT Works3 Version1.122C • Description of SAFETY PRECAUTIONS is changed. • Abbreviations, generic terms, and icon indications are changed. • GT21 is supported. • GT2512-S is supported.
Jan. 2015	SH(NA)-081194ENG-H	Writing errors have been corrected.
Apr. 2015	SH(NA)-081194ENG-I	Compatible with GT Works3 Version1.130L • Abbreviations, generic terms, and icon indications are changed. • Field network adapter unit is supported. • RGB input unit (GT27-R2) is supported. • RGB output unit (GT27-ROUT) is supported. • GT2705-V, GT2104-R, GT2103-PMBDS2, GT2103-PMBLS is supported. • The SD cards added.
May 2015	SH(NA)-081194ENG-J	Writing errors have been corrected.
Jun. 2015	SH(NA)-081194ENG-K	The model names of the CC-Link IE Field Network communication unit set have been added.
Oct. 2015	SH(NA)-081194ENG-L	Compatible with GT Works3 Version1.144A • Abbreviations, generic terms, and icon indications are changed. • GT2104-PMBD, GT2104-PMBDS is supported.
Dec. 2015	SH(NA)-081194ENG-M	Writing errors have been corrected.
Dec. 2015	SH(NA)-081194ENG-N	Compatible with GT Works3 Version1.150G • The description of SAFETY PRECAUTIONS has been changed. • Abbreviations, generic terms, and icon indications have been changed. • GT2512F-S, GT2510F-V, GT2508F-V, and environmental protection sheets have been added.
May 2016	SH(NA)-081194ENG-O	Compatible with GT Works3 Version1.155M • Abbreviations, generic terms, and icon indications have been changed. • The field network adapter unit is compatible with the HMS Anybus CompactCom M40 network communication module AB6909-C and AB6910-C. • The wireless LAN communication unit has complied with SRRC and KC requirements.
Aug. 2016	SH(NA)-081194ENG-P	Compatible with GT Works3 Version1.160S • Abbreviations, generic terms, and icon indications have been changed. • The GOT2000 series Ethernet communication unit (GT25-J71E71-100) is supported. • Writing errors have been corrected.
Oct. 2016	SH(NA)-081194ENG-Q	• Abbreviations, generic terms, and icon indications have been changed. • Partial corrections.

Revision date	* Manual Number	Revision
Jan. 2017	SH(NA)-081194ENG-R	Compatible with GT Works3 Version1.170C • GT2107 is supported. • Descriptions of the special fitting installation hole have been added.
Apr. 2017	SH(NA)-081194ENG-S	Compatible with GT Works3 Version1.175H • The description of SAFETY PRECAUTIONS has been changed. • Abbreviations, generic terms, and icon indications have been changed. • GT2510-WX, GT2507-W are supported. • Changes have been made to the rating plate.
Jun. 2017	SH(NA)-081194ENG-T	Compatible with GT Works3 Version1.180N • The description of SAFETY PRECAUTIONS has been changed. • Abbreviations, generic terms, and icon indications have been changed. • GT2505-V is supported. GT2506HS-V added.
Aug. 2017	SH(NA)-081194ENG-U	Writing errors have been corrected.
Oct. 2017	SH(NA)-081194ENG-V	• Abbreviations, generic terms, and icon indications have been changed. • Partial corrections.
Dec. 2017	SH(NA)-081194ENG-W	Partial corrections.
Apr. 2018	SH(NA)-081194ENG-X	Compatible with GT Works3 Version1.195D • The description of SAFETY PRECAUTIONS has been changed. • Abbreviations, generic terms, and icon indications have been changed. • GT2507T-W and GT2505HS-V are supported.
Jul. 2018	SH(NA)-081194ENG-Y	Compatible with GT Works3 Version1.200J • The description of SAFETY PRECAUTIONS has been changed. • Partial corrections.
Oct. 2018	SH(NA)-081194ENG-Z	Compatible with GT Works3 Version1.205P • The description of SAFETY PRECAUTIONS has been changed. • Abbreviations, generic terms, and icon indications have been changed. • The digital video output unit (GT27-VHOUT) is supported.
Apr. 2019	SH(NA)-081194ENG-AA	Compatible with GT Works3 Version1.215Z • List of Manuals for GT Works3 has been changed. • Abbreviations, generic terms, and icon indications have been changed. • Protective cover for oil (GT21-10WPCO, GT21-07WPCO, GT25-05PCO-2) have been added. • The recommended cable clamp has been changed. • Partial corrections.
Jul. 2019	SH(NA)-081194ENG-AB	Compatible with GT Works3 Version1.220E • SAFETY PRECAUTIONS has been changed. • Manuals for GT Works3 have been changed. • Abbreviations, Generic Terms, and Model Icons have been changed. • The CC-Link IE TSN communication unit (GT25-J71GN13-T2) is supported. • General specifications has been changed.
Oct. 2019	SH(NA)-081194ENG-AC	Partial corrections.
Jan. 2020	SH(NA)-081194ENG-AD	Partial corrections.
Apr. 2020	SH(NA)-081194ENG-AE	Partial corrections.
May 2020	SH(NA)-081194ENG-AF	Partial corrections.
Jun. 2020	SH(NA)-081194ENG-AG	Compatible with GT Works3 Version1.240A • List of manuals for GT Works3 has been changed. • Abbreviations, Generic Terms, and Model Icons have been changed. • The company name of TOSHIBA MACHINE CO., LTD. has been changed to SHIBAURA MACHINE CO., LTD.
Aug. 2020	SH(NA)-081194ENG-AH	Partial corrections.
Oct. 2020	SH(NA)-081194ENG-AI	Partial corrections.
Jan. 2021	SH(NA)-081194ENG-AJ	Compatible with GT Works3 Version1.250L • Description of SAFETY PRECAUTIONS changed • Abbreviations, generic terms, and model icons have been changed. • Compatible with GT2512-WXTBD, GT2512-WXTSD • Protective sheets (GT25-12WPSCC, GT25-12WPSGC) have been added. • Protective cover for oil (GT21-12WPCO) has been added.

Revision date	* Manual Number	Revision
Apr. 2021	SH(NA)-081194ENG-AK	Compatible with GT Works3 Version1.255R • Description of SAFETY PRECAUTIONS changed • Abbreviations, generic terms, and model icons have been changed. • The user memory capacity (RAM) has been increased for the GT2715, GT2712, GT2710, and GT2708 models. • Antibacterial/antiviral protective sheets (GT25-12PSAC, GT25-10PSAC, GT25-08PSAC) have been added.
Jul. 2021	SH(NA)-081194ENG-AL	• Changed the name of the direct CPU connection to the direct CPU connection (serial). • Partial corrections.
Oct. 2021	SH(NA)-081194ENG-AM	• The recommended cable clamp has been changed. • Partial corrections.
Jan. 2022	SH(NA)-081194ENG-AN	• Partial corrections.
Apr. 2022	SH(NA)-081194ENG-AO	Compatible with GT Works3 Version1.275M • The Wireless LAN communication unit has complied with the Radio Equipment Regulations (UKCA). • A description of U-Boot has been added. • Partial corrections.
Jul. 2022	SH(NA)-081194ENG-AP	• The MELSOFT GT Works3 site license product (SW1DND-GTWK3-EC) has been added.
Jan. 2023	SH(NA)-081194ENG-AQ	• Partial corrections.
Apr. 2023	SH(NA)-081194ENG-AR	• Partial corrections.
Jul. 2023	SH(NA)-081194ENG-AS	• The MELSOFT GT Works3 site license product (SW1DND-GTWK3-ECE) has been added.
Oct. 2023	SH(NA)-081194ENG-AT	• Partial corrections.
Jan. 2024	SH(NA)-081194ENG-AU	• Partial corrections.
Jul. 2024	SH(NA)-081194ENG-AV	• Partial corrections.
Apr. 2026	SH(NA)-081194ENG-AW	• Partial corrections.
Oct. 2026	SH(NA)-081194ENG-AX	• Partial corrections.

This manual confers no industrial property rights or any rights of any other kind, nor does it confer any patent licenses. Mitsubishi Electric Corporation cannot be held responsible for any problems involving industrial property rights which may occur as a result of using the contents noted in this manual.

©2013 MITSUBISHI ELECTRIC CORPORATION

WARRANTY

Please check the following product warranty details before using this product.

■1. Gratis Warranty Term and Gratis Warranty Range

If any faults or defects (hereinafter "Failure") found to be the responsibility of Mitsubishi occurs during use of the product within the gratis warranty term, the product shall be repaired at no cost via the sales representative or Mitsubishi Service Company.
However, if repairs are required onsite at domestic or overseas location, expenses to send an engineer will be solely at the customer's discretion.
Mitsubishi shall not be held responsible for any re-commissioning, maintenance, or testing on-site that involves replacement of the failed module.

(1) Gratis Warranty Term

The gratis warranty term of the product shall be for thirty-six (36) months after the date of purchase or delivery to a designated place.
Note that after manufacture and shipment from Mitsubishi, the maximum distribution period shall be six (6) months, and the longest gratis warranty term after manufacturing shall be forty-two (42) months.
The gratis warranty term of repair parts shall not exceed the gratis warranty term before repairs.

(2) Gratis Warranty Range

(a) The customer shall be responsible for the primary failure diagnosis unless otherwise specified.
If requested by the customer, Mitsubishi Electric Corporation or its representative firm may carry out the primary failure diagnosis at the customer's expense.
The primary failure diagnosis will, however, be free of charge should the cause of failure be attributable to Mitsubishi Electric Corporation.

(b) The range shall be limited to normal use within the usage state, usage methods, and usage environment, etc., which follow the conditions and precautions, etc., given in the instruction manual, user's manual and caution labels on the product.

(c) Even within the gratis warranty term, repairs shall be charged in the following cases.
- Failure occurring from inappropriate storage or handling, carelessness or negligence by the user. Failure caused by the user's hardware or software design.
- Failure caused by unapproved modifications, etc., to the product by the user.
- When the Mitsubishi product is assembled into a user's device, Failure that could have been avoided if functions or structures, judged as necessary in the legal safety measures the user's device is subject to or as necessary by industry standards, had been provided.
- Failure that could have been avoided if consumable parts designated in the instruction manual had been correctly serviced or replaced.
- Replacing consumable parts such as a battery, backlight, and fuse.
- Failure caused by external irresistible forces such as fires or abnormal voltages, and Failure caused by force majeure such as earthquakes, lightning, wind and water damage.
- Failure caused by reasons that could not be predicted by scientific technology standards at the time of shipment from Mitsubishi.
- Any other failure found not to be the responsibility of Mitsubishi or that admitted not to be so by the user.

■2. Onerous repair term after discontinuation of production

(1) Mitsubishi shall accept onerous product repairs for seven (7) years after production of the product is discontinued.
Discontinuation of production shall be notified with Mitsubishi Technical Bulletins, etc.

(2) Mitsubishi shall not accept a request for product supply (including spare parts) after production is discontinued.

■3. Overseas service

Overseas, repairs shall be accepted by Mitsubishi's local overseas FA Center.
Note that the repair conditions at each FA Center may differ.

■4. Exclusion of loss in opportunity and secondary loss from warranty liability

Regardless of the gratis warranty term, Mitsubishi shall not be liable for compensation to:

(1) Damages caused by any cause found not to be the responsibility of Mitsubishi.

(2) Loss in opportunity, lost profits incurred to the user by Failures of Mitsubishi products.

(3) Special damages and secondary damages whether foreseeable or not, compensation for accidents, and compensation for damages to products other than Mitsubishi products.

(4) Replacement by the user, maintenance of on-site equipment, start-up test run and other tasks.

■5. Changes in product specifications

The specifications given in the catalogs, manuals, or technical documents are subject to change without prior notice.

■6. Product application

(1) In using the Mitsubishi graphic operation terminal, the usage conditions shall be that the application will not lead to a major accident even if any problem or fault should occur in the graphic operation terminal device, and that backup and fail-safe functions are systematically provided outside of the device for any problem or fault.

(2) The Mitsubishi graphic operation terminal has been designed and manufactured for applications in general industries, etc.
Thus, applications in which the public could be affected such as in nuclear power plants and other power plants operated by respective power companies, and applications in which a special quality assurance system is required, such as for Railway companies or Public service shall be excluded from the graphic operation terminal applications.
In addition, applications in which human life or property could be greatly affected, such as in aircraft, medical, railway applications, incineration and fuel devices, manned transportation equipment, recreation and amusement devices, safety devices, shall also be excluded from the graphic operation terminal.
Even for the above applications, however, Mitsubishi Electric Corporation may consider the possibility of an application, provided that the customer notifies Mitsubishi Electric Corporation of the intention, the application is clearly defined and any special quality is not required, after the user consults the local Mitsubishi representative.

Intellectual Property Rights

■Trademarks

MELDAS, MELSEC, iQ Platform, MELSOFT, GOT, CC-Link, CC-Link/LT, and CC-Link IE are trademarks or registered trademarks of Mitsubishi Electric Corporation in Japan and other countries.

Microsoft, Microsoft Access, Excel, SQL Server, Visual Basic, Visual C++, Visual C#, Windows, Windows NT, Windows Server, and Windows Vista are trademarks of the Microsoft group of companies.

MODBUS is a trademark of Schneider Electric SA.

DeviceNet is a trademark of ODVA (Open DeviceNet Vendor Association, Inc.).

VNC is a registered trademark of RealVNC Ltd. in the United States and other countries.

Unicode is a trademark or registered trademark of Unicode, Inc. in the United States and other countries.

PictBridge is a registered trademark of Canon Inc.

Adobe and Adobe Reader are registered trademarks of Adobe Systems Incorporated.

Oracle and JavaScript are registered trademarks of Oracle Corporation and/or its affiliates in the United States and other countries.

QR Code is a trademark or registered trademark of DENSO WAVE INCORPORATED in Japan, the United States, and/or other countries.

Anybus is a registered trademark of HMS Industrial Networks AB.

Android and Google Chrome are trademarks or registered trademarks of Google Inc.

IOS is a trademark or registered trademark of Cisco in the U.S. and other countries and is used under license.

Safari and iPhone are trademarks of Apple Inc. registered in the United States and other countries. The iPhone trademark is used under license from AIPHONE CO., LTD.

Other company and product names herein are trademarks or registered trademarks of their respective owners.

■Copyrights

The screens (screenshots) are used in accordance with the Microsoft Corporation guideline.

SH(NA)-081194ENG-AX(2610)MEE
MODEL: GOT2000-U-HW-E

MITSUBISHI ELECTRIC CORPORATION

HEAD OFFICE: TOKYO BLDG., 2-7-3, MARUNOUCHI, CHIYODA-KU, TOKYO 100-8310, JAPAN
NAGOYA WORKS: 1-14, YADA-MINAMI 5-CHOME, HIGASHI-KU, NAGOYA 461-8670, JAPAN

When exported from Japan, this manual does not require application to the Ministry of Economy, Trade and Industry for service transaction permission.

Specifications subject to change without notice.